HİDROMEK®

KAZICI YÜKLEYİCİ
BACKHOE LOADER

HMK 102S SUPRA

YEDEK PARÇA KATALOĞU
SPARE PARTS CATALOG

SERİ NO / SERIAL NO : S050001- REXROTH
BASKI TARİHİ / EDITION DATE : 21.05.2015
KATALOG NO / CATALOG NO : Y1012568

ÖNSÖZ

HMK 102 Serisi İş Makinasını tercih ettiğiniz için teşekkür ederiz.
Bu katalog 102 serisi'nin yedek parça hizmeti için hazırlanmıştır.
İyi bir servis hizmeti ve doğru parça seçimi için kataloğun kapsamı ile ilgili aşağıda belirtilen açıklamaları okuyunuz ve anlayınız.

No
Gösterilen parçanın poz numarasını verir.

Parça No
Resimde gösterilen parçaların parça numarasını gösterir.

Parça Adı
Parçanın adını gösterir.

Adet
Parçanın o sayfada yer alan gruptaki kullanım adedini gösterir.

SK
Servis kodu kolonunda yer alan kısaltmaların aşağıda gösterildiği gibi kendilerine ait anlamları vardır.

K	→	Parçanın kit içinde yer aldığı anlamına gelir. Kitin içinde yer alan parçalar teker teker tedarik edilemez.
OP	→	Opsiyonel parça
NSP	→	Servis parçası değil.
S	→	Set. Set içinde yer alan parçalar teker teker tedarik edilebilir.

Başlangıç Seri No (Bas. S. N.)
Parçanın kullanıldığı makinenin başlangıç seri numarasını gösterir.
Örneğin; A19001 - → gösterilen parça A19001'den itibaren kullanılmıştır.

Bitiş Seri No (Bit. S. N.)
Parçanın kullanıldığı makinenin başlangıç seri numarasını gösterir.
Örneğin; - B040001 → gösterilen parça B040150'e kadar kullanılmıştır.

Yerine Kullanım (Y. Kul.)
Parçaların birbirleri yerine kullanılabilirliğini ifade eder.

A → Birbirlerinin yerine kullanılabilirler. (eski parça ↔yeni parça)
B → Biri diğerinin yerine kullanılabilir. (eski parça → yeni parça)
C → Biri diğerinin yerine kullanılabilir. (eski parça ← yeni parça)
D → Birbirlerinin yerine kullanılamaz. (eski parça – yeni parça)

Not
Parçaların tanımlarında yer almayan açıklamaları gösterir.

PREFACE

We would like to thank you for purchasing HMK 102 Series Construction Equipment.
This catalog has been prepared for ordering spare parts for 102 series.
For satisfactory service and selection of correct part, read and understand instructions as shown below.

No
This indicates the indicating number of part.

Part No
It shows the part number of the parts which are included in an illustration.

Description
It shows the name of the part.

Q'ty
It shows the quantitiy use of part for the group that was illustrated on page.

SC
Abbreviations on service code column have their own meaning as show below.

K	→	This means that the part is contained in the kit. Parts are given with KIT, can not be supplied individually.
OP	→	Optional part
NSP	→	Non service part.
S	→	Set. Parts are given with set, can be supplied individually.

Serial Number From (S./N. From)
It shows the machine serial number in which the parts are used.
For example; A19001 - → the part that is shown in illustration was used from A19001.

Serial Number From (S./N. To)
It shows the machine serial number in which the parts are used.
For example; - B040001 → the part that is shown in illustration was used to B040150.

ICA
This indicates the interchangeability of the parts between a new one and old one.
A → Mutual interchangeability (old part ↔ new part)
B → One way interchangeability (old part → new part)
C → One way interchangeability (old part ← new part)
D → No interchangeability (old part – new part)

Note
It shows explanations, which are not given in description

KISALTMALAR / ABBREVATIONS

KISALTMA/ABBREVIATION	AÇIKLAMA	DESCRIPTION
&	VE	AND
A/C		AIR CONDITIONER
A.K.V.	ANA KUMANDA VALFİ	
AM		ARM
AR		AS REQUIRED
ASS'Y		ASSEMBLY
BKT		BUCKET
BM		BOOM
BG	BULGARCA	
FR	FRANSIZCA	
HYD.		HYDRAULIC
ISP	İSPANYOLCA	
İNG	İNGİLİZCE	
JY	JOYSTICK	
K	KİT	KIT
K.M.	KAYNAKLI MONTAJ	
LH		LEFT HAND
LR		LONG REACH
LV	LEVYELİ	LEVERS
M.C.V.		MAIN CONTROL VALVE
OP	OPSİYONEL	OPTINAL
PORT	PORTEKİZCE	
REV.	REVİZYON	REVISION
RH		RIGHT HAND
RUS	RUSÇA	
S	SET	SET
STD	STANDART	STD
SW		SWING
TR	TÜRKÇE	
TRV		TRAVEL
W.A.		WELDING ASSEMBLY

İÇİNDEKİLER / CONTENTS

A	**MOTOR SİSTEMİ**	**ENGINE SYSTEM**
A010.04.01	MOTOR VE ŞANZIMAN MONTAJI (STANDART)	ENGINE & TRANSMISSION MOUNTING (STANDARD)
A010.06.01	MOTOR VE ŞANZIMAN MONTAJI (LUCK-UP)	ENGINE & TRANSMISSION MOUNTING (LUCK-UP)
A020.03.01	MOTOR KONTROL SİSTEMİ	ENGINE CONTROL SYSTEM
A030.04.01	HAVA EMİŞ SİSTEMİ	AIR INTAKE SYSTEM
A030.05.01	HAVA EMİŞ SİSTEMİ	AIR INTAKE SYSTEM
A040.03.01	EGZOZ MONTAJI	EXHAUST MOUNTING
A050.04.01	MOTOR SOĞUTMA MONTAJI	ENGINE COOLING MOUNTING
A060.01.01	RADYATÖR KOMPLESİ	RADIATOR ASSEMBLY
A070.03.01	YAKIT SİSTEMİ	FUEL SYSTEM
A080.02.01	ISITMA, HAVALANDIRMA SİSTEMİ	HEATING VENTING SYSTEM
A080.02.02	KALORİFER ÜNİTESİ	HEATER UNIT
A090.02.01	ISITMA, HAVALANDIRMA VE SOĞUTMA SİSTEMİ	HEATING VENTING AIR CONDITIONING SYSTEM
A090.02.02	KLİMA ÜNİTESİ	AIR CONDITIONER UNIT
B	**ŞASİ VE KAPORTA**	**FRAME & COWLING**
B010.05.01	ŞASİ	CHASSIS
B020.00.01	AYAK, KIZAK	STABILIZER, SIDESHIFT
B040.00.01	KIZAK PAPUCU	STABILIZER PADS
B050.00.01	DÖNÜŞ TABLASI	KINGPOST CARRIAGE
B060.00.01	DÖNÜŞ KUTUSU	KINGPOST
B080.02.01	KAPUT- PANEL- PANJUR- YAN KAPAK MONTAJI	BONNET- PANEL- FRONT GRILL- SIDE COVER MOUNTING
B090.01.01	ÇAMURLUKLAR, ÖN	FENDERS, FRONT
B100.05.01	ÇAMURLUK, ARKA	FENDER, REAR
C	**KABİN**	**OPERATOR CAB**
C010.01.01	KABİN VE BAĞLANTI TAKOZLARI	CAB & CAB MOUNTING
C020.01.01	KAPI VE CAMLAR, SAĞ	DOOR AND WINDOW, RH
C030.01.01	KAPI VE CAMLAR, SOL	DOOR AND WINDOW, LH
C040.00.01	CAMLAR, ÖN - ARKA	WINDOWS, FRONT - REAR
C050.01.01	KABİN DONANIMI	CAB ACCESSORIES
C060.01.01	KABİN (LEVYE MEKANİZMALI)	CAB (LEVERS MECHANISM)
C060.03.01	KABİN (JOYSTİK MEKANİZMALI)	CAB (JOYSTICK MECHANISM)
C060.03.01	KABİN (JOYSTİK MEKANİZMALI)	CAB (JOYSTICK MECHANISM)
C070.01.01	KONSOL, ÖN	CONSOLE, FRONT
C080.01.01	KONSOL, SOL	CONSOLE, LH
C090.01.01	KONSOL, SAĞ	CONSOLE, RH
C110.01.01	JOYSTİCK MEKANİZMASI, SAĞ	JOYSTICK MECHANISM, RH
C110.01.01R1	JOYSTİCK MEKANİZMASI, SAĞ	JOYSTICK MECHANISM, RH
C120.01.01	JOYSTİCK MEKANİZMASI, SOL	JOYSTICK MECHANISM, LH
C120.01.01R1	JOYSTİCK MEKANİZMASI, SOL	JOYSTICK MECHANISM, LH
C130.01.01	DİREKSİYON KOLONU KOMPLESİ	STEERING COLUMN ASSEMBLY
C140.00.02	OPERATOR KOLTUK KOMPLESİ	OPERATOR SEAT ASSEMBLY
C140.01.02	OPERATOR KOLTUK KOMPLESİ (HAVA SÜSPANSİYONLU)	OPERATOR SEAT ASSEMBLY (WITH AIR SUSPENSION)
C140.02.01	OPERATOR KOLTUK MONTAJI	OPERATOR SEAT MOUNTING
C140.03.01	OPERATOR KOLTUK MONTAJI (HAVA SÜSPANSİYONLU)	OPERATOR SEAT MOUNTING (WITH AIR SUSPENSION
D	**ATAÇMAN**	**ATTACHMENT**

İÇİNDEKİLER / CONTENTS

D010.00.01	YÜKLEYİCİ KOL MONTAJI (1)	LOADER ARM MOUNTING (1)
D010.00.02	YÜKLEYİCİ KOL MONTAJI (2)	LOADER ARM MOUNTING (2)
D010.00.03	YÜKLEYİCİ KOL MONTAJI (3)	LOADER ARM MOUNTING (3)
D020.00.01	AÇILIR KEPÇE (1.1 m3)	MULTIPURPOSE BUCKET, LOADER (1.1 m3)
D020.01.01	AÇILIR KEPÇE (1,3 m3)	MULTIPORPUSE BUCKET, LOADER (1,3 m3)
D020.02.01	AÇILIR KEPÇE (ÇABUK SÖK TAKLI)	MULTIPURPOSE BUCKET, LOADER (WITH QUICK COUPLER
D020.03.01	AÇILIR KEPÇE (1 m3)	MULTIPORPUSE BUCKET, LOADER (1 m3)
D020.04.01	AÇILIR KEPÇE (1,2 m3)	MULTIPORPUSE BUCKET, LOADER (1,2 m3)
D030.00.01	SABİT KEPÇE (1.2 m3)	SHOVEL (1.2 m3)
D030.01.01	SABİT KEPÇE (1,5 m3)	SHOVEL (1,5 m3)
D040.00.01	TESVİYE KÜREĞİ (716x2800)	LEVELLING, BLADE (716x2800)
D040.01.01	TESVİYE KÜREĞİ (900x2800)	LEVELLING, BLADE (900x2800)
D040.02.01	TESVİYE KÜREĞİ (ÇABUK SÖK TAKLI 716x2800)	LEVELLING BLADE (WITH QUICK COUPLER 716x2800)
D040.03.01	TESVİYE KÜREĞİ (ÇABUK SÖK TAKLI 900x2800)	LEVELLING BLADE (WITH QUICK COUPLER 900x2800)
D040.04.01	TESVİYE KÜREĞİ, ÇİFT EKSENLİ	LEVELLING BLADE, DOUBLE AXIS
D050.00.01	TOMRUK YÜKLEYİCİ, (2+1 TIRNAKLI)	LOG GRAPPLE, (2+1 CLAMP)
D050.01.01	TOMRUK YÜKLEYİCİ, (HAREKETLİ, Ø200mm)	LOG GRAPPLE, (WITH VERTICAL MOVEMENT Ø200mm)
D050.02.01	TOMRUK YÜKLEYİCİ, (HAREKETLİ, Ø500mm)	LOG GRAPPLE, (WITH VERTICAL MOVEMENT Ø500mm)
D060.00.01	FORKLİFT APARATI (AÇILIR KEPÇE)	FORKLIFT (MULTIPURPOSE BUCKET)
D060.01.01	FORKLİFT APARATLI (SABİT KEPÇE 1.2 m3)	FORKLIFT (SHOVEL 1.2 m3
D060.02.01	FORKLİFT APARATLI (SABİT KEPÇE 1.5 m3)	FORKLIFT (SHOVEL 1.5 m3)
D070.00.01	ÇABUK SÖK TAK (YÜKLEYİCİ KEPÇE)	QUICK COUPLER (LOADER)
D080.00.01	BOM MONTAJI	BOOM MOUNTING
D090.00.01	ARM MONTAJI	ARM MOUNTING
D090.02.01	TELESKOPİK ARM MONTAJI	TELESCOPIC ARM MOUNTING
D100.00.01	KEPÇE BAĞLANTISI	BUCKET LINKAGE
D110.00.01	KEPÇE, KAZICI (300 mm)	BUCKET, BACKHOE (300 mm)
D110.01.01	KEPÇE, KAZICI (350 mm)	BUCKET, BACKHOE (350 mm)
D110.02.01	KEPÇE, KAZICI (400 mm)	BUCKET, BACKHOE (400 mm)
D110.03.01	KEPÇE, KAZICI (500 mm)	BUCKET, BACKHOE (500 mm)
D110.04.01	KEPÇE, KAZICI (600 mm)	BUCKET, BACKHOE (600 mm)
D110.05.01	KEPÇE, KAZICI (700 mm)	BUCKET, BACKHOE (700 mm)
D110.06.01	KEPÇE, KAZICI (800 mm)	BUCKET, BACKHOE (800 mm)
D110.07.01	KEPÇE, KAZICI (900 mm)	BUCKET, BACKHOE (900 mm)
D120.00.01	DÖNERLİ KANAL KEPÇESİ	TILTING BUCKET
D140.00.01	ÇABUK SÖK TAK, KAZICI	QUICK COUPLER, BACKHOE
D150.00.01	KIRICI MONTAJI (MONTABERT- SC 36)	BREAKER MOUNTING (MONTABERT- SC 36)
D150.00.02	KIRICI KOMPLESİ (MONTABERT- SC 36)	BREAKER ASSEMBLY (MONTABERT- SC 36)
D150.01.01	KIRICI MONTAJI (MONTABERT- SC 28)	BREAKER MOUNTING (MONTABERT- SC 28)
D150.01.02	KIRICI KOMPLESİ (MONTABERT- SC 28)	BREAKER ASSEMBLY (MONTABERT- SC 28)
D150.04.01	KIRICI MONTAJI (DEMO DMB50)	BREAKER MOUNTING (DEMO DMB50)
D150.04.02	KIRICI KOMPLESİ (DEMO DMB50)	BREAKER ASSEMBLY (DEMO DMB50)
D150.05.01	KIRICI MONTAJI (DEMO DMB70)	BREAKER MOUNTING (DEMO DMB70)
D150.05.02	KIRICI KOMPLESİ (DEMO DMB70)	BREAKER ASSEMBLY (DEMO DMB70)
D150.06.01	KIRICI MONTAJI (LİFTON LH 360)	BREAKER MOUNTING (LIFTON LH 360)
D150.06.02	KIRICI KOMPLESİ (LIFTON LH 360)	BREAKER ASSEMBLY (LIFTON LH 360)
D150.07.01	KIRICI MONTAJI (TOKU)	BREAKER MOUNTING (TOKU)
D150.07.02	KIRICI KOMPLESİ (TOKU TNB 6M)	BREAKER ASSEMBLY (TOKU TNB 6M)

İÇİNDEKİLER / CONTENTS

D150.08.01	KIRICI MONTAJI (MONTABERT-140)	BREAKER MOUNTING (MONTABERT-140)
D150.08.02	KIRICI KOMPLESİ (MONTABERT-140)	BREAKER ASSEMBLY (MONTABERT-140)
D150.09.01	KIRICI MONTAJI (MONTABERT-95)	BREAKER MOUNTING (MONTABERT-95)
D150.09.02	KIRICI KOMPLESİ (MONTABERT- 95)	BREAKER ASSEMBLY (MONTABERT- 95)
D150.10.01	KIRICI MONTAJI (DEMO S700V)	BREAKER MOUNTING (DEMO S700V)
D150.10.02	KIRICI KOMPLESİ (DEMO S700V)	BREAKER ASSEMBLY (DEMO S700V)
D160.00.01	BURGU (Ø350x1000)	AUGER (Ø350x1000)
D160.01.01	BURGU (Ø500x1300)	AUGER (Ø500x1300)
D160.02.01	BURGU (Ø610x1600)	AUGER (Ø610x1600)
D170.00.01	RİPER	RIPPER
E	**GÜÇ AKTARMA SİSTEMİ**	**POWER TRAIN SYSTEM**
E010.04.01	GÜÇ AKTARMA MONTAJI	POWER TRAIN MOUNTING
E020.02.01	TEKER VE LASTİK GRUBU, ÖN	WHELL & TIRE GROUP, FRONT
E030.05.01	TEKER VE LASTİK GRUBU	WHELL & TIRE GROUP
E040.02.01	ÖN AKS	FRONT AXLE
E040.02.02	ÖN AKS, AYNA MAHRUTİ - CR (TURNER)	FRONT AXLE, BEVEL GEAR SET - CR (TURNER)
E040.02.03	ÖN AKS, ŞAFT BAĞLANTISI - CR (TURNER)	FRONT AXLE, INPUT FLANGE - CR (TURNER)
E040.02.04	ÖN AKS, DİFERANSİYEL - CR (TURNER)	FRONT AXLE, DIFFERENTIAL - CR (TURNER)
E040.02.05	ÖN AKS, KOVAN PARÇALARI - CR (TURNER)	FRONT AXLE, AXLE CASING PARTS - CR (TURNER)
E040.02.06	ÖN AKS, POYRA	FRONT AXLE, HUB
E040.02.07	ÖN AKS, SON REDÜKSİYON	FRONT AXLE, FINAL REDUCTION
E040.02.08	ÖN AKS, DİREKSİYON SİLİNDİRİ - CR (TURNER)	FRONT AXLE, STEERING CYLINDER- CR (TURNER)
E050.02.01	ARKA AKS - CR (TURNER)	REAR AKS - CR (TURNER)
E050.02.02	ARKA AKS, AYNA MAHRUTİ DİŞLİ SETİ - CR (TURNER)	REAR AXLE, BEVEL GEAR SET - CR (TURNER)
E050.02.03	ARKA AKS, ŞAFT BAĞLANTISI - CR (TURNER)	REAR AXLE, INPUT FLANGE - CR (TURNER)
E050.02.04	ARKA AKS, DİFERANSİYEL - CR (TURNER)	REAR AXLE, DIFFERENTIAL - CR (TURNER)
E050.02.05	ARKA AKS, DİŞLİ ŞAFTI VE FREN - CR (TURNER)	REAR AXLE, HALF-SHAFTS AND BRAKES - CR (TURNER)
E050.02.06	ARKA AKS, AKS GÖVDESİ - CR (TURNER)	REAR AXLE, AXLE HOUSING - CR (TURNER)
E050.02.07	ARKA AKS, TEKERLEK GÖBEĞİ (POYRA) - CR (TURNER)	REAR AXLE, WHEEL HUB - CR (TURNER)
E050.02.08	ARKA AKS, PARK FRENİ - CR (TURNER)	REAR AXLE, BRAKE CALIPER - CR (TURNER)
E050.02.09	ARKA AKS, SON REDÜKSİYON - CR (TURNER)	REAR AXLE, FINAL REDUCTION - CR (TURNER)
E050.02.10	ARKA AKS, MAFSAL GÖVDESİ VE DİREKSİYON SİLİNDİRİ - CR (TURNER)	REAR AXLE, SWIVEL HOUSING AND STEERING CYLINDER - CR (TURNER)
E050.02.11	ARKA AKS, DİFERANSİYEL KİLİDİ - CR (TURNER)	REAR AXLE, DIFFERENTIAL LOCKING - CR (TURNER)
E060.01.01	ŞANZIMAN (STANDART)	TRANSMISSION (STANDARD)
E060.01.02	ŞANZIMAN, TORK KONVERTÖR (STANDART)	TRANSMISSION, TORGUE CONVERTER ARRANGMENT (STANDARD)
E060.01.03	ŞANZIMAN, POMPA GRUBU	TRANSMISSION, PUMP GROUP
E060.01.04	ŞANZIMAN, TRANSMİSYON GÖVDESİ, ÖN (STANDART)	TRANSMISSION, FRONT CASING AND ANCILLIARIES (STANDARD)
E060.01.05	ŞANZIMAN, VALF GRUBU	TRANSMISSION, VALVE GROUP
E060.01.06	ŞANZIMAN, TRANSMİSYON GÖVDESİ, ARKA (STANDART)	TRANSMISSION, REAR CASING AND ANCILLIARIES (STANDARD)
E060.01.07	ŞANZIMAN, KAVRAMA DİSK GRUBU	TRANSMISSION, CLUTCH GROUP
E060.01.08	ŞANZIMAN, KAVRAMA GRUBU, ANA (STANDART)	TRANSMISSION, SHAFT GROUP - MAIN (STANDARD)
E060.01.09	ŞANZIMAN, KAVRAMA GRUBU, AVARE DİŞLİ	TRANSMISSION, SHAFT GROUP IDLER
E060.01.10	ŞANZIMAN, KAVRAMA GRUBU, GİRİŞ (STANDART)	TRANSMISSION, SHAFT GROUP INPUT (STANDARD)

İÇİNDEKİLER / CONTENTS

E060.01.11	ŞANZIMAN, ŞAFT GRUBU, PTO (STANDART)	TRANSMISSION, SHAFT GROUP PTO (STANDARD)
E060.01.12	ŞANZIMAN, KAVRAMA GRUBU, GERİ (STANDART)	TRANSMISSION, SHAFT GROUP COUNTER (STANDARD)
E060.02.01	ŞANZIMAN (LUCK-UP)	TRANSMISSION (LUCK-UP)
E060.02.02	ŞANZIMAN, TORK KONVERTÖR (LUCK-UP)	TRANSMISSION, TORGUE CONVERTER ARRANGMENT (LUCK-UP)
E060.02.03	ŞANZIMAN, POMPA GRUBU (LUCK- UP)	TRANSMISSION, PUMP GROUP (LUCK- UP)
E060.02.04	ŞANZIMAN, TRANSMİSYON GÖVDESİ, ÖN (LUCK-UP)	TRANSMISSION, FRONT CASING AND ANCILLIARIES (LUCK-UP)
E060.02.05	ŞANZIMAN, VALF GRUBU (LUCK- UP)	TRANSMISSION, VALVE GROUP (LUCK- UP)
E060.02.06	ŞANZIMAN, TRANSMİSYON GÖVDESİ, ARKA (LUCK-UP)	TRANSMISSION, REAR CASING AND ANCILLIARIES (LUCK-UP)
E060.02.07	ŞANZIMAN, KAVRAMA DİSK GRUBU (LUCK- UP)	TRANSMISSION, CLUTCH GROUP (LUCK- UP)
E060.02.08	ŞANZIMAN, KAVRAMA GRUBU, ANA (LUCK-UP)	TRANSMISSION, SHAFT GROUP - MAIN (LUCK-UP)
E060.02.09	ŞANZIMAN, KAVRAMA GRUBU, AVARE DİŞLİ	TRANSMISSION, SHAFT GROUP IDLER
E060.02.10	ŞANZIMAN, KAVRAMA GRUBU, GİRİŞ (LUCK-UP)	TRANSMISSION, SHAFT GROUP INPUT (LUCK-UP)
E060.02.11	ŞANZIMAN, ŞAFT GRUBU, PTO (LUCK-UP)	TRANSMISSION, SHAFT GROUP PTO (LUCK-UP)
E060.02.12	ŞANZIMAN, KAVRAMA GRUBU, GERİ (LUCK-UP)	TRANSMISSION, SHAFT GROUP COUNTER (LUCK-UP)
E070.00.01	PARK FRENİ	PARKING BRAKE
F	**HİDROLİK SİSTEM**	**HYDRAULIC SYSTEM**
F010.01.01	HİDROLİK TANK MONTAJI (VERSİYON 2)	HYDRAULIC TANK MOUNTING (VERSION 2)
F020.07.01	YÜKLEYİCİ KUMANDA MEKANİZMASI (AÇILIR KEPÇE & LEVYE)(TİP B)	LOADER CONTROL MECHANISM(MULTIPURPOSE BUCKET & LEVERS)(TYPE B)
F020.09.01	YÜKLEYİCİ KUMANDA MEKANİZMASI (AÇILIR KEPÇE & LEVYE)(TİP B)	LOADER CONTROL MECHANISM(MULTIPURPOSE BUCKET & LEVERS)(TYPE B)
F020.10.01	YÜKLEYİCİ KUMANDA MEKANİZMASI (AÇILIR KEPÇE & JOYSTİCK)(TİP B)	LOADER CONTROL MECHANISM (MULTIPURPOSE BUCKET & JOYSTICK) (TYPE B)
F020.11.01	YÜKLEYİCİ KUMANDA MEKANİZMASI (SABİT KEPÇE & JOYSTİCK) (TİP B)	BACKHOE CONTROL MECHANISM (SHOVEL & JOYSTICK) (TYPE B)
F030.06.01	ARKA KUMANDA MEKANİZMASI (TİP B) (OP)	BACKHOE CONTROL MECHANISM (TYPE B) (OP)
F030.06.01	ARKA KUMANDA MEKANİZMASI (TİP B) (OP)	BACKHOE CONTROL MECHANISM (TYPE B) (OP)
F040.02.01	İLAVE ATAŞMAN PEDAL MONTAJI (TİPB+TB+JY)	ADDITIONAL ATTACHMENT PEDAL MOUNTING (TYPEB+TB+JY)
F040.03.01	PEDAL MONTAJI, İLAVE ATAŞMAN (TİPB+TB+LV)	PEDAL MOUNTING, ADDITIONAL ATTACHMENT (TYPEB+TB+LV)
F040.04.01	PEDAL MONTAJI, İLAVE ATAŞMAN (TİPB+NB+LV)	PEDAL MOUNTING, ADDITIONAL ATTACHMENT (TYPEB+NB+LV)
F050.27.01	HİDROLİK TESİSAT, ANA DAĞITIM (DİŞLİ POMPA & TURNER &TİP B)	HYDRAULIC PIPING, MAIN (GEAR PUMP & TURNER & TYPE B)
F050.27.01	HİDROLİK TESİSAT, ANA DAĞITIM (DİŞLİ POMPA & TURNER &TİP B)	HYDRAULIC PIPING, MAIN (GEAR PUMP & TURNER & TYPE B)
F050.29.01	HİDROLİK TESİSAT, ANA DAĞITIM (PİSTONLU POMPA & TURNER & TİP B)	HYDRAULIC PIPING, MAIN (PISTON PUMP & TURNER & TYPE B)
F060.04.01	HİDROLİK TESİSAT, PİLOT (TİP B)	HYDRAULIC PIPING, PILOT (TYPE B)
F065.01.01	KUMANDA DEĞİŞTİRİCİ	PATTERN SHIFTER
F070.05.01	YÜKLEYİCİ HİDROLİK TESİSATI, SABİT KEPÇE (TİP B & DİŞLİ POMPA) (OP)	LOADER HYD. PIPING, SHOVEL (TYPE B & GEAR PUMP) (OP)
F070.05.01	YÜKLEYİCİ HİDROLİK TESİSATI, SABİT KEPÇE (TİP B & DİŞLİ POMPA) (OP)	LOADER HYD. PIPING, SHOVEL (TYPE B & GEAR PUMP) (OP)
F070.07.01	YÜKLEYİCİ HİDROLİK TESİSATI, AÇILIR KEPÇE (TİP B & DİŞLİ POMPA) (OP)	LOADER HYD. PIPING, MULTIPURPOSE BUCKET (TYPE B & GEAR PUMP) (OP)
F070.07.01	YÜKLEYİCİ HİDROLİK TESİSATI, AÇILIR KEPÇE (TİP B & DİŞLİ POMPA) (OP)	LOADER HYD. PIPING, MULTIPURPOSE BUCKET (TYPE B & GEAR PUMP) (OP)
F070.08.01	YÜKLEYİCİ HİDROLİK TESİSATI, KALDIRICI SİLİNDİR, EMNİYET VALFİ	LOADER HYDRAULIC PIPING, LIFT CYLINDER, WITH PROTECTION VALVE

İÇİNDEKİLER / CONTENTS

F070.09.01	YÜKLEYİCİ HİDROLİK TESİSATI, KEPÇE SİLİNDİR, EMNİYET VALFİ	LOADER HYDRAULIC PIPING, SHOVEL CYLINDER, WITH PROTECTION VALVE
F070.10.01	YÜKLEYİCİ HİDROLİK TESİSATI, MSS	LOADER HYDRAULIC PIPING, MSS
F070.15.01	YÜKLEYİCİ HİDROLİK TESİSATI, SABİT KEPÇE (TİP B & PİSTONLU POMPA) (OP)	LOADER HYD. PIPING, SHOVEL (TYPE B & PISTON PUMP) (OP)
F070.15.01	YÜKLEYİCİ HİDROLİK TESİSATI, SABİT KEPÇE (TİP B & PİSTONLU POMPA) (OP)	LOADER HYD. PIPING, SHOVEL (TYPE B & PISTON PUMP) (OP)
F070.16.01	YÜKLEYİCİ HİDROLİK TESİSATI, AÇILIR KEPÇE (TİP B & PİSTONLU POMPA) (OP)	LOADER HYD. PIPING, MULTIPURPOSE BUCKET (TYPE B & PISTON PUMP) (OP)
F070.16.01	YÜKLEYİCİ HİDROLİK TESİSATI, AÇILIR KEPÇE (TİP B & PİSTONLU POMPA) (OP)	LOADER HYD. PIPING, MULTIPURPOSE BUCKET (TYPE B & PISTON PUMP) (OP)
F080.00.01	HORTUM TUTUCU SETİ (STD. ARM)	HOSE HOLDER SET (STD. ARM)
F080.01.01	HORTUM TUTUCU SETİ (TELESKOPİK ARM	HOSE HOLDER SET (TELESCOPIC ARM)
F080.04.01	HORTUM TUTUCU SETİ (STD. ARM & MAFSALLI BOM)	HOSE HOLDER SET (STD. ARM & ARTICULATED BOOM)
F090.01.01	HİDROLİK TESİSAT, AYAK SİLİNDİRİ (KİLİT VALFLİ)	HYD. PIPING, STABILIZER CYLINDER (WITH SAFETY LOCKING VALVE)
F090.04.01	HİDROLİK TESİSAT, AYAK SİLİNDİRİ (TİP B)	HYDRAULIC PIPING, STABILIZER CYLINDER (TYPE B)
F100.01.01	HİDROLİK TESİSATI, SIKMA PİSTONU	HYDRAULIC PIPING, HYDROCLAMP
F110.02.01	HİDROLİK TESİSAT, DÖNÜŞ SİLİNDİRİ (TİP B)	HYDRAULIC PIPING, SWING CYLINDER (TYPE B)
F120.01.01	KAZICI HİDROLİK TESİSATI, BOM SİLİNDİRİ (EMNİYET VALFLİ)	BACKHOE HYD. PIPING, BOOM CYLINDER (WITH SAFETY LOCK VALVE)
F120.04.01	KAZICI HİDROLİK TESİSATI, BOM SİLİNDİRİ (MAFSALLI BOM, MUZ BOM)	BACKHOE HYD. PIPING, BOOM CYLINDER (ARTICULATED BOOM)
F120.05.01	KAZICI HİDROLİK TESİSATI, BOM SİLİNDİRİ (MAFSALLI BOM)	BACKHOE HYD. PIPING, BOOM CYLINDER (ARTICULATED BOOM)
F120.06.01	KAZICI HİDROLİK TESİSATI, BOM SİLİNDİRİ (TİP B)	BACKHOE HYDRAULIC PIPING, BOOM CYLINDER (TYPE B)
F130.00.01	KAZICI HİDROLİK TESİSATI, ARM SİLİNDİRİ	BACKHOE HYDRAULIC PIPING, ARM CYLINDER
F130.01.01	KAZICI HİDROLİK TESİSATI, ARM SİLİNDİRİ (EMNİYET VALFLİ)	BACKHOE HYD. PIPING, ARM CYLINDER (WITH SAFETY LOCK VALVE)
F130.03.01	KAZICI HİDROLİK TESİSATI, ARM SİLİNDİRİ (MAFSALLI BOM)	BACKHOE HYDRAULIC PIPING, ARM CYLINDER (ARTICULATED BOOM)
F130.04.01	KAZICI HİDROLİK TESİSATI, ARM SİLİNDİRİ (EMNİYET VALFLİ, MAFSALLI BOM)	BACKHOE HYDRAULIC PIPING, ARM CYLINDER (SAFETY VALVE, ARTICULATED BOM)
F140.02.01	KAZICI HİDROLİK TESİSATI, KEPÇE SİLİNDİRİ (TELESKOPİK BOM & REXROTH)	BACKHOE HYDRAULIC PIPING, BUCKET CYLINDER (TELESCOPIC BOOM & REXROTH)
F140.04.01	KAZICI HİDROLİK TESİSATI, KEPÇE SİLİNDİRİ (TELESKOPİK BOM) (TİP B)	KAZICI HİDROLİK TESİSATI, KEPÇE SİLİNDİRİ (TELESKOPİK BOM) (TİP B)
F140.05.01	KAZICI HİDROLİK TESİSATI, KEPÇE SİLİNDİRİ (MAFSALLI BOM &TİP B)	BACKHOE HYDRAULIC PIPING, BUCKET CYLINDER (ARTICULATED BOOM & TİP B)
F140.06.01	KAZICI HİDROLİK TESİSATI, KEPÇE SİLİNDİRİ (TİP B)	BACKHOE HYDRAULIC PIPING, BUCKET CYLINDER (TYPE B)
F150.03.01	KIRICI HİDROLİK TESİSATI (STD. ARM & TİP B)	BREAKER HYDRAULIC PIPING (STD. ARM & TYPE B)
F150.05.01	TEK ETKİLİ HİDROLİK TESİSATI (KIRICI & STD. ARM & LEVYE & JOYİSTİK) (TİP B)	SINGLE ACTING HYD. PIPING (BREAKER & STD.ARM & LEVERS & JOYSTICK) (TYPE B)
F150.07.01	TEK ETKİLİ HİDROLİK TESİSATI (KIRICI & STD. ARM & JOYİSTİK & MAFSALLI BOM) (TİP	SINGLE ACTING HYD. PIPING (BREAKER & STD.ARM & JOYSTICK&ARTICULATED BOOM)(TYPE B
F150.08.01	KIRICI HİDROLİK TESİSATI (TELESKOPİK & TİP B)	BREAKER HYDRAULIC PIPING (TELESCOPIC BOOM & TYPE B)
F160.05.01	İLAVE HAT HİDROLİK TESİSATI, BURGU/DÖNER KEPÇE (TELESKOPİK&TİP B)	ADDITIONAL LINE HYDRAULIC PIPING,AUGER/TILTING BUCKET(TELESCOPIC & TYPE B)
F160.07.01	ÇİFT ETKİLİ HİDROLİK TESİSATI, BURGU/DÖNER KEPÇE & KIRICI (TELESKOPİK ARM & JOYS	DOUBLE ACTING HYD.PIPING, AUGER/TILTING BUCKE &BREAKER(TELESCOPIC ARM & JY) (TYP
F190.03.01	HİDROLİK TESİSAT, DİFERANSİYEL KİLİDİ	HYDRAULIC PIPING, DIFFERENTIAL LOCK
F200.00.01	HİDROLİK, BOM KİLİDİ (MAFSALLI BOM) (OP)	HYDRAULIC, BOOM LOCKING (KNUCKLE BOOM) (OP)
F200.02.01	HİDROLİK, BOM KİLİDİ	HYDRAULIC, BOOM LOCKING

İÇİNDEKİLER / CONTENTS

F200.03.01	HİDROLİK, BOM KİLİDİ (KAZ AYAK) (OP)	HYDRAULIC, BOOM LOCKING (WING TYPE) (OP)
G	**HİDROLİK KOMPONENTLER**	**HYDRAULIC COMPONENTS**
G010.01.01	DİŞLİ POMPA	GEAR PUMP
G020.00.01	PİSTONLU POMPA	PISTON PUMP
G030.01.01	YÜKLEYİCİ KUMANDA VALFİ (TİP B-LS)	LOADER CONTROL VALVE, MECHANIC (TİP B-LS)
G030.01.02	YÜKLEYİCİ KUMANDA VALFİ- GİRİŞ BLOĞU (TİP B)	LOADER CONTROL VALVE-INLET BLOCK (TYPE B)
G030.01.03	YÜKLEYİCİ KUMANDA VALFİ- KALDIRICI SİLİNDİR, KONTROL BLOĞU (TİP B)	LOADER CONTROL VALVE- LIFT CYLINDER CONTROL BLOCK (TYPE B)
G030.01.04	YÜKLEYİCİ KUMANDA VALFİ- ARM SİLİNDİR KONTROL, BLOĞU (TİP B)	LOADER CONTROL VALVE- ARM CYLINDER CONTROL BLOCK (TYPE B)
G030.01.05	YÜKLEYİCİ KUMANDA VALFİ- AÇILIR KEPÇE SİLİNDİRİ, KONTROL BLOĞU(TİP B)	LOADER CONTROL VALVE- CLAMSHOVEL RAM CONTROL BLOCK (TYPE B)
G030.01.06	YÜKLEYİCİ KUMANDA VALFİ- ÇIKIŞ BLOĞU (TİP B)	LOADER CONTROL VALVE- OUTLET BLOCK (TYPE B)
G030.02.01	YÜKLEYİCİ KUMANDA VALFİ, AÇILIR KEPÇE (TİP B - PB)	LOADER CONTROL VALVE, MULTIPURPOSE BUCKET (TYPE B - PB)
G030.02.02	YÜKLEYİCİ KUMANDA VALFİ- ARM SİLİNDİR KONTROL, BLOĞU (TİP B)	LOADER CONTROL VALVE- ARM CYLINDER CONTROL BLOCK (TYPE B)
G030.02.03	YÜKLEYİCİ KUMANDA VALFİ- ÇIKIŞ BLOĞU (TİP B)	LOADER CONTROL VALVE- OUTLET BLOCK (TYPE B)
G030.02.04	YÜKLEYİCİ KUMANDA VALFİ- GİRİŞ BLOĞU (TİP B-PB)	LOADER CONTROL VALVE-INLET BLOCK (TYPE B-PB)
G030.02.05	YÜKLEYİCİ KUMANDA VALFİ- KALDIRICI SİLİNDİR, KONTROL BLOĞU (TİP B)	LOADER CONTROL VALVE- LIFT CYLINDER CONTROL BLOCK (TYPE B)
G030.02.06	YÜKLEYİCİ KUMANDA VALFİ-AÇILIR KEPÇE SİLİNDİRİ,KONTROL BLOĞU(TİP B)	LOADER CONTROL VALVE- CLAMSHOVEL RAM CONTROL BLOCK (TYPE B)
G040.02.01	KAZICI KUMANDA VALFİ, JOYSTİCK (PİSTONLU POMPA & TİP B, FS)	BACKHOE CONTROL VALVE, JOYSTICK (PISTON PUMP & TYPE B, FS)
G040.02.02	KAZICI KUMANDA VALFİ- GİRİŞ BLOĞU (TİP B)	BACKHOE CONTROL VALVE-INLET BLOCK (TYPE B)
G040.02.03	KAZICI KUMANDA VALFİ- ÇIKIŞ BLOĞU (TİP B)	BACKHOE CONTROL VALVE -OUTLET BLOCK (TYPE B)
G040.02.04	KAZICI KUMANDA VALFİ ARM KONTROL BLOĞU, JOYSTICK (TİP B)	BACKHOE CONTROL VALVE ARM CONTROL BLOCKS, JOYSTICK (TYPE B)
G040.02.05	KAZICI KUMANDA VALFİ- DÖNÜŞ SİLİNDİRİ KONTROL BLOĞU, JOYSTICK (TİP B)	BACKHOE CONTROL VALVE-SLEW SWING RAM CONTROL BLOCK, JOYSTICK (TYPE B)
G040.02.06	KAZICI KUMANDA VALFİ- AYAK SİLİNDİRİ KONTROL BLOĞU, JOYSTICK (TİP B)	BACKHOE CONTROL VALVE-STABILIZER RAM CONTROL BLOCK, JOYSTICK (TYPE B)
G040.02.07	KAZICI KUMANDA VALFİ- KIVIRICI SİLİNDİR KONTROL BLOĞU, JOYSTICK (TİP B)	BACKHOE CONTROL VALVE BUCKET RAM CONTROL BLOCK, JOYSTICK (TYPE B)
G040.02.08	KAZICI KUMANDA VALFİ BOM KONTROL BLOĞU, JOYSTICK (TİP B)	BACKHOE CONTROL VALVE BOOM CONTROL BLOCKS, JOYSTICK (TYPE B)
G040.02.09	KAZICI KUMANDA VALFİ TELESKOPİK KONTROL BLOĞU, JOYSTICK (TİP B)	BACKHOE CONTROL VALVE TELESCOPIC CONTROL BLOCKS, JOYSTICK (TYPE B)
G040.07.01	KAZICI KUMANDA VALFİ, LEVYELİ (PİSTONLU POMPA &TİP B, FS)	BACKHOE CONTROL VALVE, LEVERS (PISTON PUMP & TYPE B, FS)
G040.07.02	KAZICI KUMANDA VALFİ- GİRİŞ BLOĞU (TİP B)	BACKHOE CONTROL VALVE-INLET BLOCK (TYPE B)
G040.07.03	KAZICI KUMANDA VALF ARM KONTROL BLOKLARI,LEVYE (TİP B)	BACKHOE CONTROL VALVE ARM CONTROL BLOCKS, LEVERS (TYPE B)
G040.07.04	KAZICI KUMANDA VALFİ- DÖNÜŞ SİLİNDİRİ KONTROL BLOĞU, LEVYE (TİP B)	BACKHOE CONTROL VALVE-SLEW SWING RAM CONTROL BLOCK LEVERS (TYPE B)
G040.07.05	KAZICI KUMANDA VALFİ- AYAK SİLİNDİRİ KONTROL BLOĞU, LEVYE (TİP B)	BACKHOE CONTROL VALVE-STABILIZER RAM CONTROL BLOCK, LEVERS (TYPE B)
G040.07.06	KAZICI KUMANDA VALFİ- KIVIRICI SİLİNDİR KONTROL BLOĞU, LEVYE (TİP B)	BACKHOE CONTROL VALVE BUCKET RAM CONTROL BLOCK, LEVERS (TYPE B)
G040.07.07	KAZICI KUMANDA VALFİ BOM KONTROL BLOKLARI,LEVYE (TİP B)	BACKHOE CONTROL VALVE BOOM CONTROL BLOCKS, LEVERS (TYPE B)

İÇİNDEKİLER / CONTENTS

G040.07.08	KAZICI KUMANDA VALFİ TELESKOPİK KONTROL BLOKLARI,LEVYE (TİP B)	BACKHOE CONTROL VALVE TELESCOPIC CONTROL BLOCKS,LEVERS (TYPE B)
G040.07.09	KAZICI KUMANDA VALFİ- ÇIKIŞ BLOĞU (TİP B)	BACKHOE CONTROL VALVE -OUTLET BLOCK (TYPE B)
G050.00.01	İLAVE ATAŞMAN KUMANDA VALFİ	ADDITIONAL ATTACHMENT CONTROL VALVE
G060.00.01	JOYSTİCK KUMANDA, SAĞ	REMOTE CONTROL VALVE, RH
G070.00.01	JOYSTİCK KUMANDA, SOL	REMOTE CONTROL VALVE, LEFT
G080.00.01	KALDIRICI SİLİNDİR, YÜKLEYİCİ, SAĞ	LIFT CYLINDER, LOADER, RH
G100.00.01	KEPÇE SİLİNDİRİ, YÜKLEYİCİ, SAĞ	BUCKET CYLINDER, LOADER, RH
G110.00.01	KEPÇE SİLİNDİRİ, YÜKLEYİCİ, SOL	BUCKET CYLINDER, LOADER, LH
G120.00.01	AÇILIR KEPÇE SİLİNDİRİ	MULTIPURPOSE BUCKET CYLINDER
G130.00.01	AYAK SİLİNDİRİ, SAĞ	STABILIZER CYLINDER, RH
G140.00.01	AYAK SİLİNDİRİ, SOL	STABILIZER CYLINDER, LH
G150.00.01	DÖNÜŞ SİLİNDİRİ	SWING CYLINDER
G160.00.01	BOM SİLİNDİRİ, KAZICI	BOOM CYLINDER, BACKHOE
G170.00.01	ARM SİLİNDİRİ, KAZICI	ARM CYLINDER, BACKHOE
G170.00.01	ARM SİLİNDİRİ, KAZICI	ARM CYLINDER, BACKHOE
G180.00.01	KEPÇE SİLİNDİRİ, KAZICI	BUCKET CYLINDER, BACKHOE
G180.01.01	KEPÇE SİLİNDİRİ, KAZICI, TELESKOPİK	BUCKET CYLINDER, BACKHOE, TELESCOPIC
G190.00.01	TELESKOPİK SİLİNDİR, KAZICI	TELESCOPIC CYLINDER, BACKHOE
G200.00.01	ÇABUK SÖK-TAK SİLİNDİRİ, YÜKLEYİCİ	QUICK COUPLER CYLINDER, LOADER
G210.00.01	TESVİYE KÜREĞİ SİLİNDİRİ	LEVELLING BLADE CYLINDER
G220.00.01	TESVİYE KÜREĞİ SİLİNDİRİ (ÇİFT EKSENLİ) SAĞ	LEVELLING BLADE CYLINDER (DOUBLE AXIS) RH
G220.00.02	TESVİYE KÜREĞİ SİLİNDİRİ (ÇİFT EKSENLİ) SOL	LEVELLING BLADE CYLINDER (DOUBLE AXIS) LH
G220.00.03	TESVİYE KÜREĞİ SİLİNDİRİ (ÇİFT EKSENLİ) MERKEZ	LEVELLING BLADE CYLINDER (DOUBLE AXIS) CENTER
G230.00.01	TOMRUK YÜKLEYİCİ SİLİNDİRİ	LOG GRAPPLE CYLINDER
G240.00.01	TOMRUK YÜKLEYİCİ SİLİNDİRİ (HAREKETLİ)	LOG GRAPPLE CYLINDER (WITH VERTICAL MOVEMENT)
G250.00.01	DÖNERLİ KANAL KEPÇESİ SİLİNDİRİ	TILTING BUCKET CYLINDER
G260.00.01	BOM KİLİT SİLİNDİRİ	BOOM LOCKING CYLINDER
G260.01.01	BOM KİLİT SİLİNDİRİ (MAFSALLI BOM)	BOOM LOCKING CYLINDER)KNUCKLE BOOM)
G265.01.01	ARM SİLİNDİRİ, KAZICI	ARM CYLINDER, BACKHOE
G265.02.01	ARM SİLİNDİRİ, KAZICI	ARM CYLINDER, BACKHOE
G280.00.01	ÇEKİCİ KANCA SİLİNDİRİ	TOW HOOK CYLINDER
G290.00.01	PİLOT BESLEME BLOĞU (ORANSAL VALFLİ)	PILOT SUPPLY BLOCK (WITH PROPORTIONAL VALVE)
G300.00.01	SARSINTISIZ YÜRÜYÜŞ VALFİ, MSS	MSS, VALVE
G310.00.01	VALF, KUMANDA DEĞİŞTİRİCİ	VALVE, PATTERN SHIFTER
H	**DİREKSİYON SİSTEMİ**	**STEERING SYSTEM**
H010.05.01	HİDROLİK TESİSAT, DİREKSİYON (TİP B)	HYDRAULIC PIPING, STEERING (TYPE B)
H020.00.01	KOMBİNASYON VALFİ	COMBINATION VALVE
J	**FREN SİSTEMİ**	**BRAKE SYSTEM**
J010.06.01	HİDROLİK TESİSAT, FREN	HYDRAULIC PIPING, BRAKE
K	**ELEKTRİK SİSTEMİ**	**ELECTRICAL SYSTEM**
K010.00.04	KABİN ELEKTRİĞİ (4)	CAB ELECTRIC (4)
K010.00.05	KABİN ELEKTRİĞİ (5)	CAB ELECTRIC (5)
K010.00.08	KABİN ELEKTRİĞİ (8)	CAB ELECTRIC (8)
K010.01.02	KABİN ELEKTRİĞİ (2)	CAB ELECTRIC (2)
K010.01.06	KABİN ELEKTRİĞİ (6)	CAB ELECTRIC (6)

İÇİNDEKİLER / CONTENTS

K010.01.07	KABİN ELEKTRİĞİ (7)	CAB ELECTRIC (7)
K010.02.01	KABİN ELEKTRİĞİ (1)	CAB ELECTRIC (1)
K020.10.01	ELEKTRİK (1)	ELECTRIC (1)
K040.00.01	KOMPRESÖR VE ELEKTRİK TESİSATI	COMPRESSOR & HARNESS
K050.02.01	SMARTLINK (TİP B)	SMARTLINK (TYPE B)
K050.03.01	SMARTLINK	SMARTLINK
Y	**DİĞERLERİ (ETİKET, AVADANLIK)**	**OTHERS (DECAL, TOOLS)**
Y010.07.01	ETİKET VE LEVHALAR (1)	DECAL AND PLATES (1)
Y020.06.01	ETİKET VE LEVHALAR, TR (2)	DECAL AND PLATES, TR (2)
Y020.17.01	ETİKET VE LEVHALAR, EN (2)	DECAL AND PLATES, EN (2)
Y020.26.01	ETİKET VE LEVHALAR, FR (2)	DECAL AND PLATES, FR (2)
Y020.37.01	ETİKET VE LEVHALAR, ISP (2)	DECAL AND PLATES (2)
Y020.45.01	ETİKET VE LEVHALAR, RUS (2)	DECAL AND PLATES, RUS (2)
Y020.54.01	ETİKET VE LEVHALAR, POR (2)	DECAL AND PLATES, POR (2)
Y020.62.01	ETİKET VE LEVHALAR, BUL (2)	DECAL AND PLATES, BUL (2)
Y030.00.01	ETİKET VE LEVHALAR, KIRICI	DECAL AND PLATES, BREAKER
Y040.00.01	AVADANLIK TAKIMI	TOOL KIT
Z	**MOTOR PARÇALARI**	**ENGINE PARTS**
Z010.02.01	MOTOR, PERKINS 1104D-44TA	ENGINE, PERKINS 1104D-44TA
Z020.02.01	KÜLBÜTÖR KAPAĞI	CYLINDER HEAD COVER
Z020.02.02	KAM MİLİ	CAM SHAFT
Z020.02.03	KÜLBÜTÖR	ROCKER ASSEMBLY
Z020.02.04	PİSTON VE SEGMANLAR	PISTONS & RINGS
Z020.02.05	VOLAN	FLYWHEEL
Z020.02.06	VOLAN MUHAFAZASI	FLYWHEEL HOUSING
Z020.02.07	KRANKMİLİ & ANA VE GEZİNTİ YATAKLARI	CRANKSHAFT MAIN & BIG END BEARINGS
Z020.02.08	SİLİNDİR KAPAĞI	CYLINDER HEAD ASSY
Z020.02.09	SİLİNDİR BLOĞU VE GÖMLEĞİ	CYLINDER BLOCK &LINERS
Z020.02.10	BİYEL KOLU	CONNECTING RODS
Z020.02.11	KRANK ARKA KEÇE YUVASI	REAR END OIL SEAL
Z020.02.12	KÖR KAPAK	BLANKING PLATES
Z020.02.13	KRANK KASNAĞI	FRONT END DRIVE INPUT
Z020.02.14	ZAMANLAMA DİŞLİSİ KAPAĞI (1)	TIMING CASE (1)
Z020.02.15	ZAMANLAMA DİŞLİSİ KAPAĞI (2)	TIMING CASE (2)
Z020.02.16	ZAMANLAMA DİŞLİSİ KAPAĞI (3)	TIMING COVER (3)
Z020.02.17	ADAPTÖR	DRIVE ADAPTOR
Z020.02.18	TAPA	BLANKING PLUGS
Z020.02.19	KÖR KAPAK	BLANKING PLATES
Z020.02.20	MOTOR KALDIRMA KULAKLARI	ENGINE LIFTING EYES
Z020.02.21	YARDIMCI DONANIMLAR	MISCALLANEOUS & AUXILIARIES
Z020.02.22	KÖR KAPAK	BLANKING PLATES
Z030.02.01	KARTER	SUMP
Z030.02.02	YAĞ KONTROL ÇUBUĞU BORUSU	DIPSTICK & FILLER TUBE
Z030.02.03	YAĞ EMİŞ BORUSU	OIL STRAINER
Z030.02.04	YAĞ DOLDURMA BORUSU	FILLER
Z030.02.05	YAĞ SOĞUTUCU	OIL COOLER
Z030.02.06	YAĞ FİLTRESİ	OIL FILTER

İÇİNDEKİLER / CONTENTS

Z030.02.07	YAĞ FİLTRESİ	REMOTE LUBRICATING OIL FILTER
Z030.02.08	YAĞ POMPASI	LUBRICATING OIL PUMP & DELIVERY HOUSING
Z030.02.09	BESLEME BORUSU	FEED PIPES
Z030.02.10	SIZINTI BORUSU	LEAK-OFF PIPES
Z030.02.11	HAVALANDIRMA SİSTEMİ	BREATHER
Z040.02.01	FAN KASNAĞI	FAN DRIVE
Z040.02.02	SU DEVİRDAİM POMPASI	WATER PUMP
Z040.02.03	BAĞLANTI BORULARI	PIPES
Z040.02.04	TERMOSTAT VE KAPAĞI	WATER OUTLET HOUSING
Z050.02.01	YAKIT PÜSKÜRTME POMPASI	FUEL INJECTION PUMP
Z050.02.02	YAKIT BORULARI	HIGH PRESSURE FUEL PIPES
Z050.02.03	ENJEKTÖRLER	ATOMISERS
Z050.02.04	YAKIT SIZINTI BORUSU	FUEL LEAK-OFF PIPE
Z050.02.05	YAKIT TRANSFER POMPASI	LIFT PUMP
Z050.02.06	PÜSKÜRTME POMPASI BORUSU	INJECTION PUMP TO FILTER PIPE
Z050.02.07	YAKIT BESLEME KONTROL BORUSU	BOOST CONTROL PIPE
Z060.02.01	SOĞUK ÇALIŞTIRMA MÜŞÜRÜ	PICK-UP SENSOR
Z060.02.02	İLK HAREKET MÜŞÜRÜ	PICK-UP SENSOR
Z060.02.03	MARŞ MOTORU	STARTER MOTOR
Z060.02.04	ALTERNATÖR	ALTERNATOR
Z060.02.05	ALTERNATÖR BAĞLANTILARI	ALTERNATOR BRACKET & FIXINGS
Z060.02.06	ALTERNATÖR KASNAĞI	PULLEYS
Z060.02.07	ISITMA BUJİSİ	HEATER PLUGS
Z060.02.08	YAĞ BASINÇ MÜŞÜRÜ	LUBRICATION OIL PRESSURE SWITCHGAUGE
Z060.02.09	SU HARARET MÜŞÜRÜ	TEMPERATURE GAUGE & SENDER
Z070.02.01	TÜRBOŞARJ	TURBOCHARGER
Z070.02.02	EGSOZ DİRSEĞİ VE BAĞLANTILARI	PIPEWORK & CONNECTIONS
Z070.02.03	EGSOZ MANİFOLDU	EXHAUST MANIFOLD
Z070.02.04	BAĞLANTILAR	PIPEWORK & CONNECTION
Z070.02.05	EMME MANİFOLDU	INDUCTION MANIFOLD

A - MOTOR SİSTEMİ
A - ENGINE SYSTEM

Sayfa No / Page No	Sayfa Adı	Page Name	Revizyon / Revision
A010.04.01	MOTOR VE ŞANZIMAN MONTAJI (STANDART)	ENGINE & TRANSMISSION MOUNTING (STANDARD)	
A010.06.01	MOTOR VE ŞANZIMAN MONTAJI (LUCK-UP)	ENGINE & TRANSMISSION MOUNTING (LUCK-UP)	
A020.03.01	MOTOR KONTROL SİSTEMİ	ENGINE CONTROL SYSTEM	
A030.04.01	HAVA EMİŞ SİSTEMİ	AIR INTAKE SYSTEM	
A030.05.01	HAVA EMİŞ SİSTEMİ	AIR INTAKE SYSTEM	
A040.03.01	EGZOZ MONTAJI	EXHAUST MOUNTING	
A050.04.01	MOTOR SOĞUTMA MONTAJI	ENGINE COOLING MOUNTING	
A060.01.01	RADYATÖR KOMPLESİ	RADIATOR ASSEMBLY	
A070.03.01	YAKIT SİSTEMİ	FUEL SYSTEM	
A080.02.01	ISITMA, HAVALANDIRMA SİSTEMİ	HEATING VENTING SYSTEM	
A080.02.02	KALORİFER ÜNİTESİ	HEATER UNIT	
A090.02.01	ISITMA, HAVALANDIRMA VE SOĞUTMA SİSTEMİ	HEATING VENTING AIR CONDITIONING SYSTEM	
A090.02.02	KLİMA ÜNİTESİ	AIR CONDITIONER UNIT	

MOTOR VE ŞANZIMAN MONTAJI (STANDART)
ENGINE & TRANSMISSION MOUNTING (STANDARD)

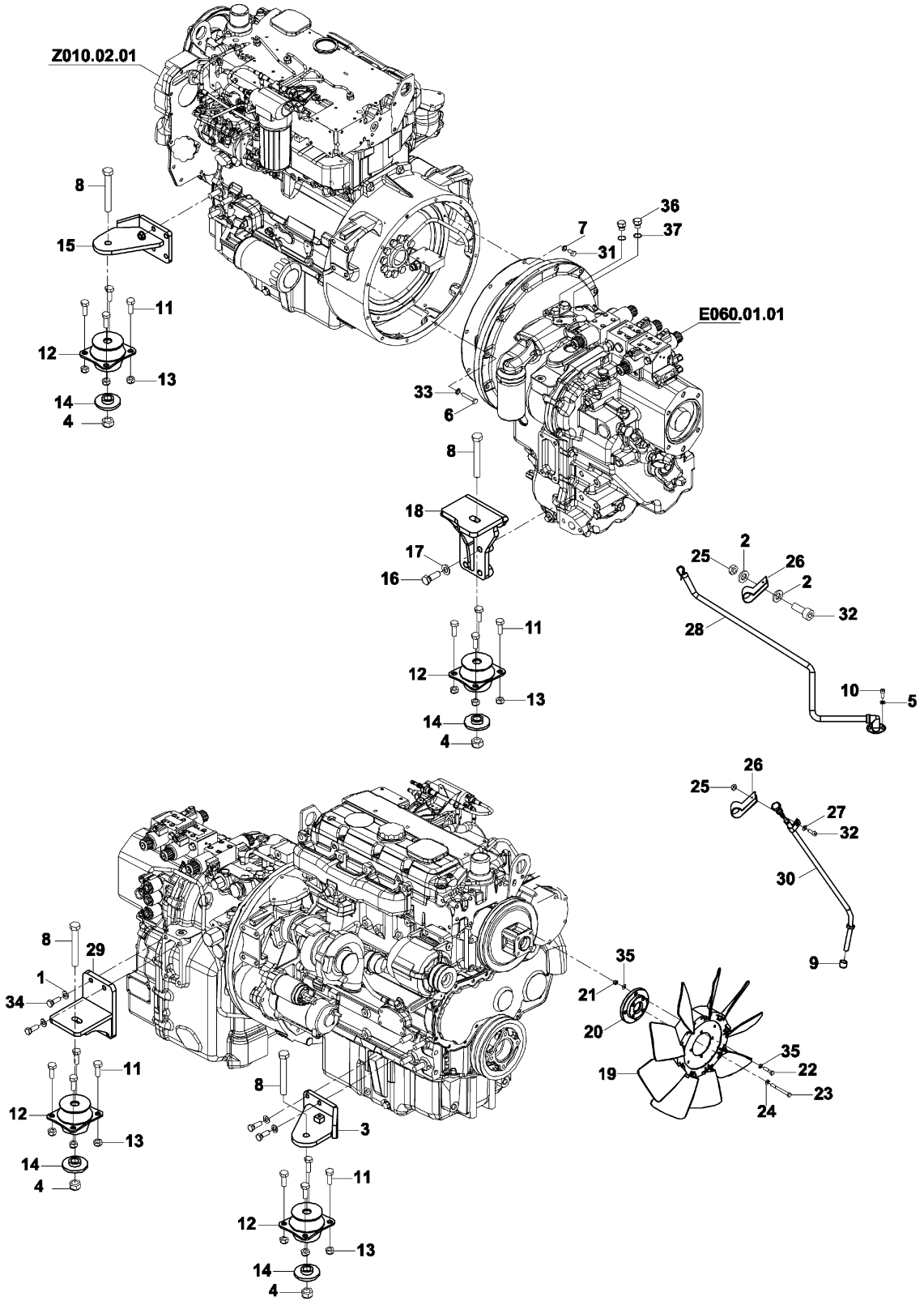

MOTOR VE ŞANZIMAN MONTAJI (LUCK-UP)
ENGINE & TRANSMISSION MOUNTING (LUCK-UP)

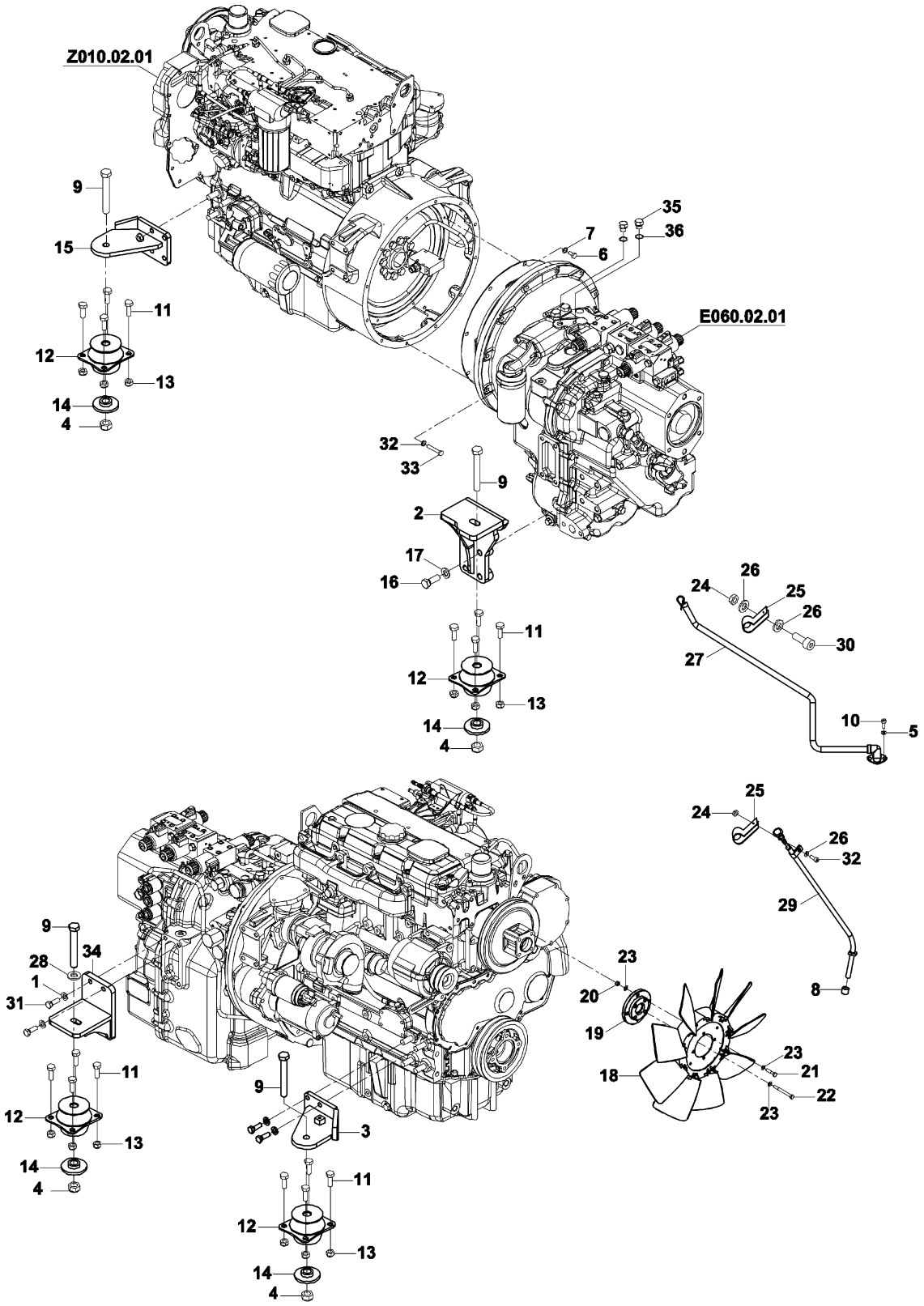

MOTOR KONTROL SİSTEMİ
ENGINE CONTROL SYSTEM

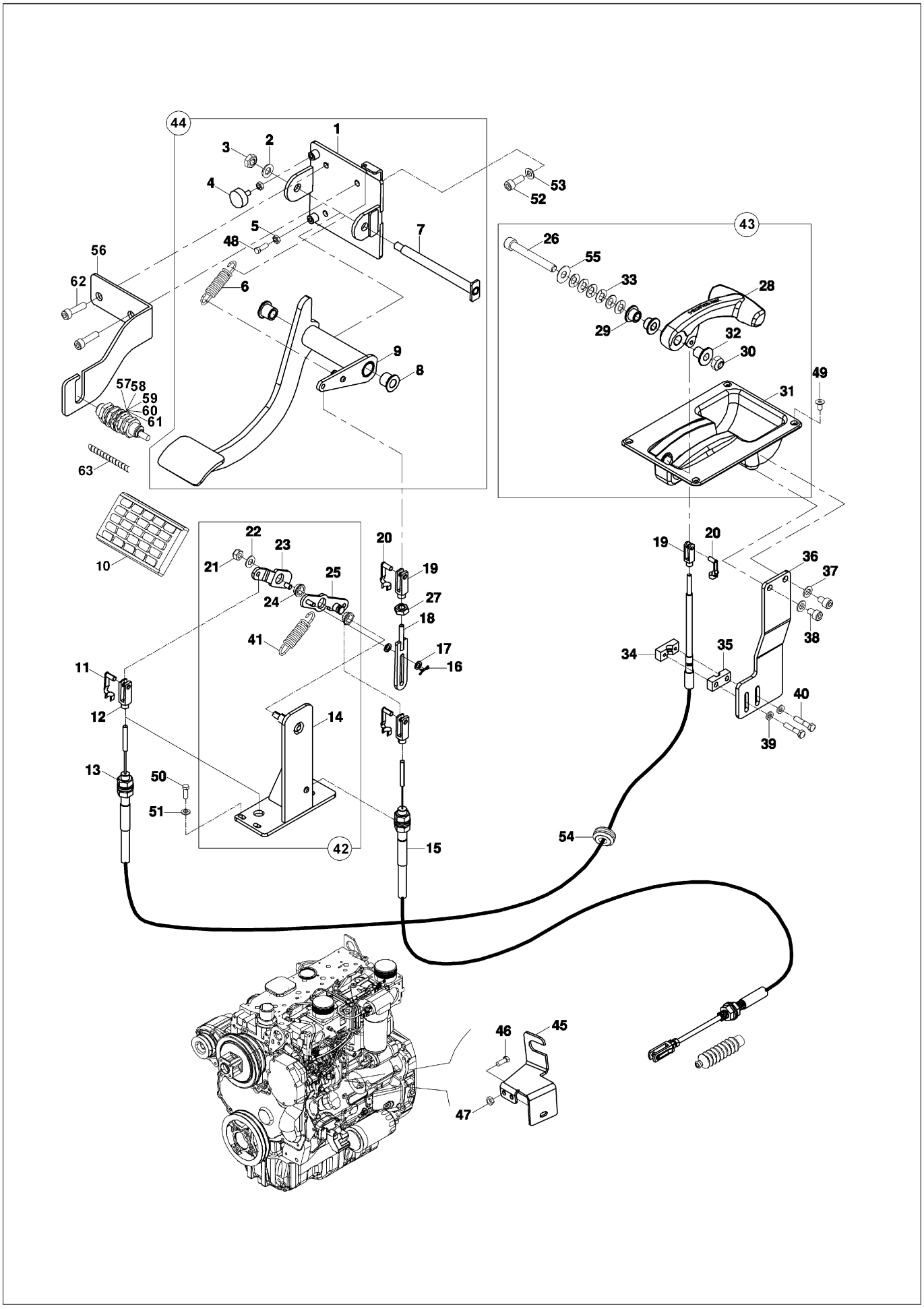

MOTOR KONTROL SİSTEMİ
ENGINE CONTROL SYSTEM

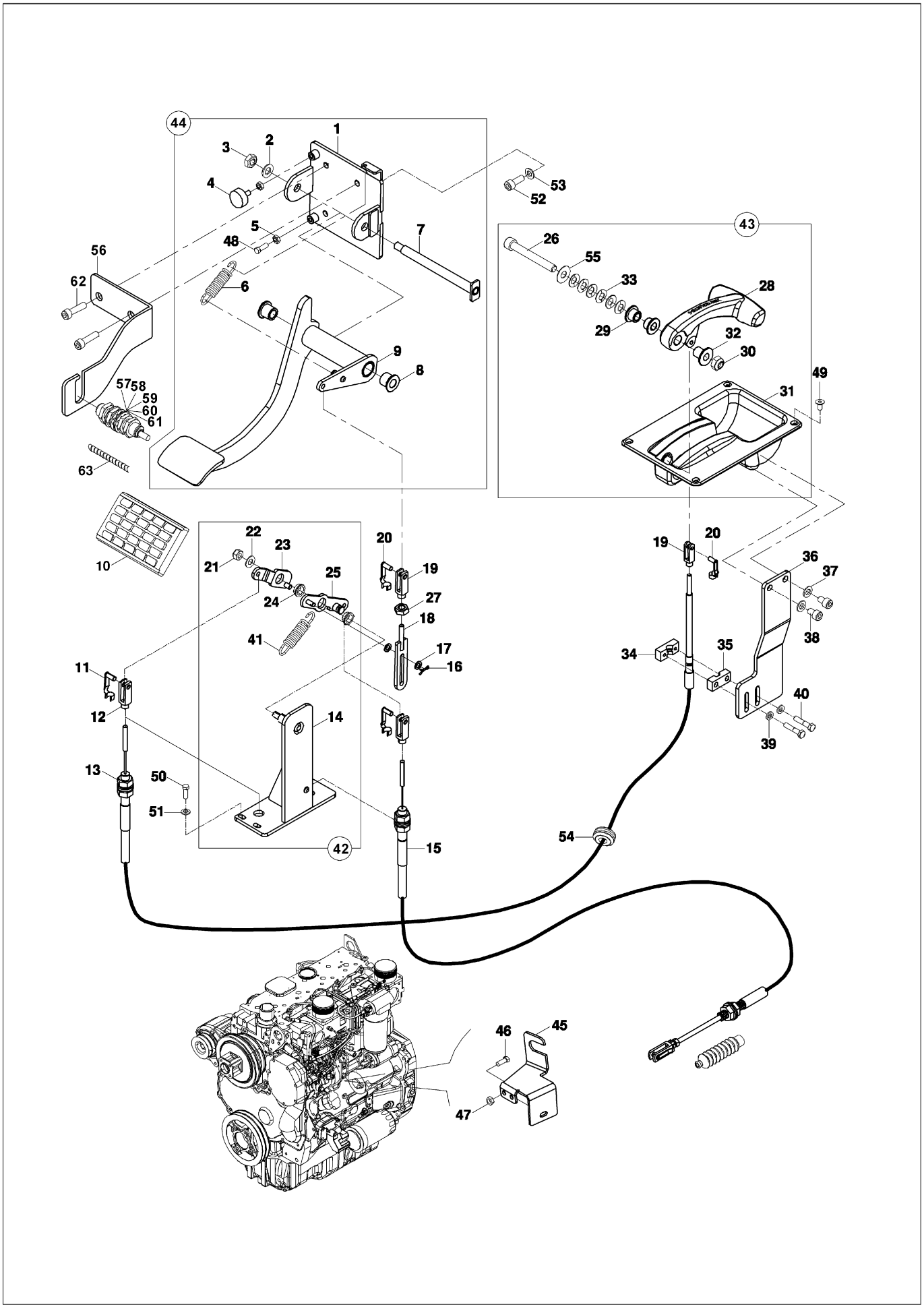

HAVA EMİŞ SİSTEMİ
AIR INTAKE SYSTEM

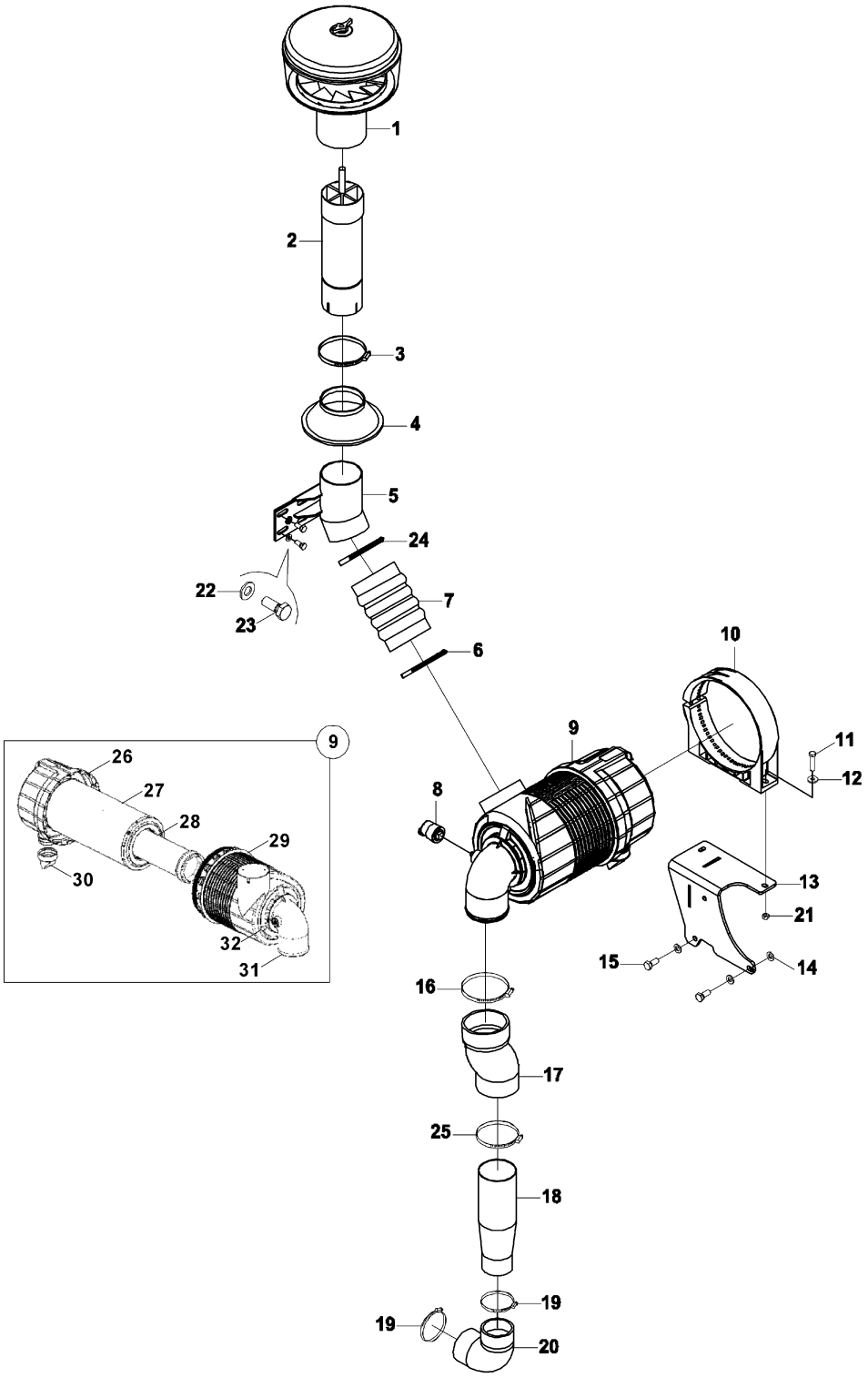

HAVA EMİŞ SİSTEMİ
AIR INTAKE SYSTEM

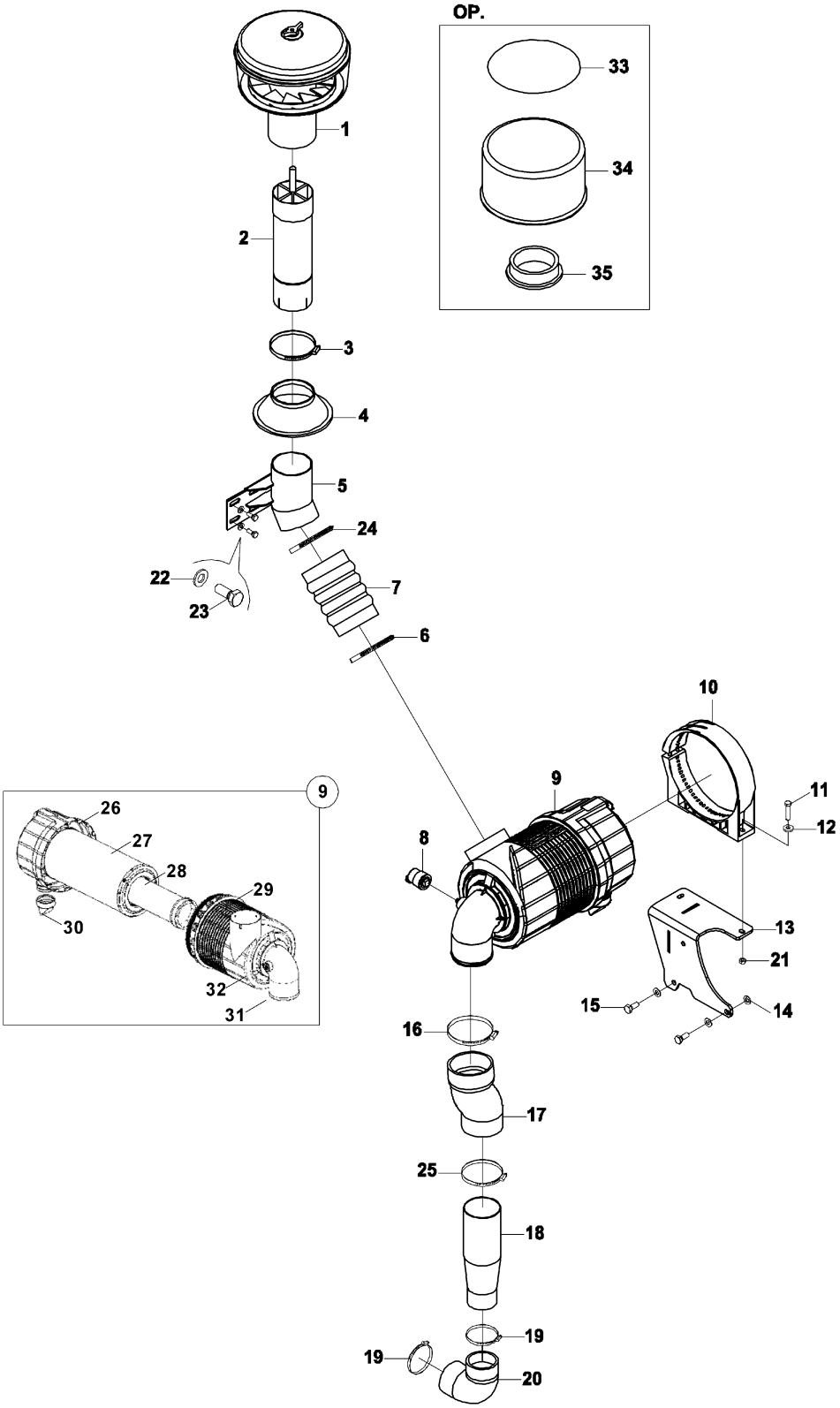

EGZOZ MONTAJI
EXHAUST MOUNTING

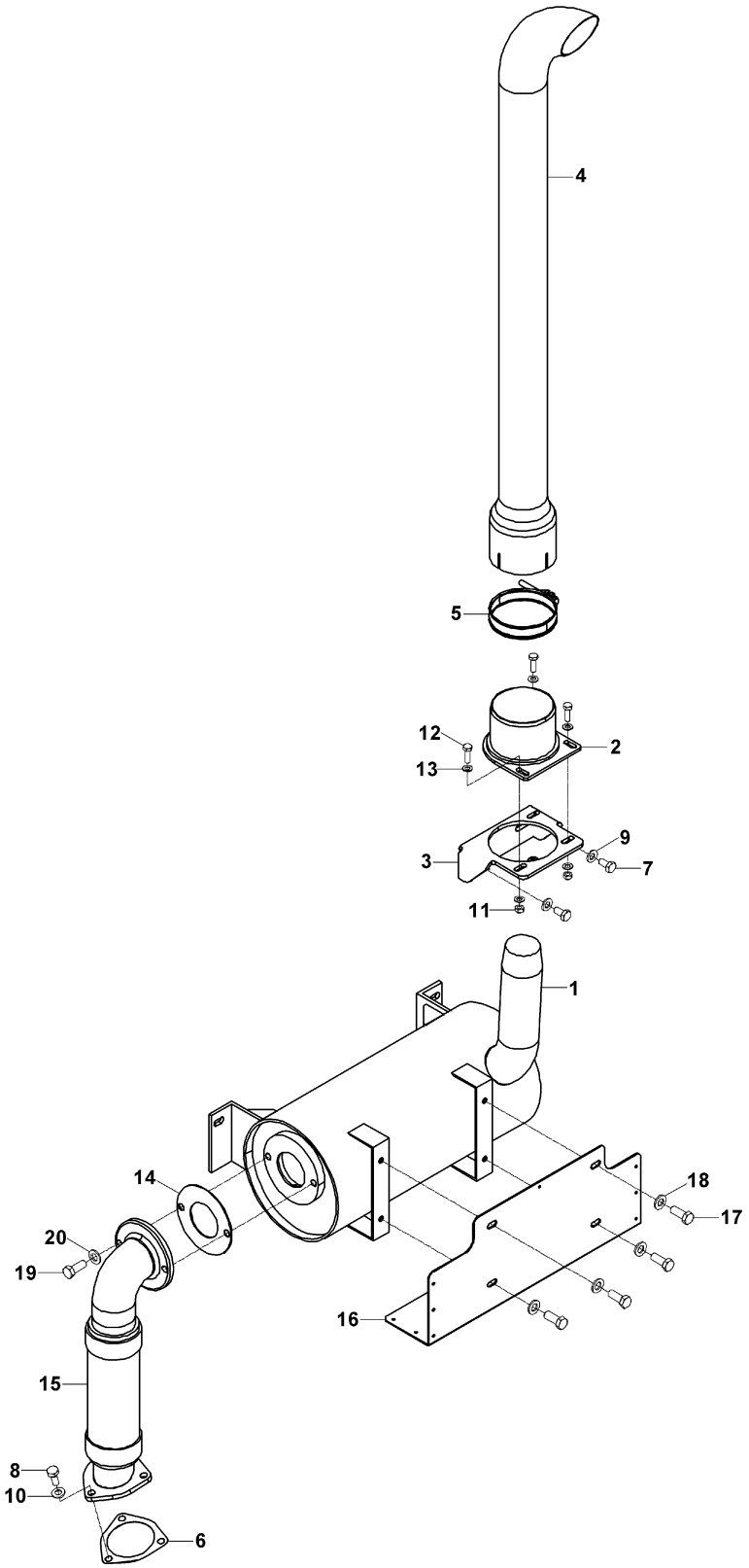

MOTOR SOĞUTMA MONTAJI
ENGINE COOLING MOUNTING

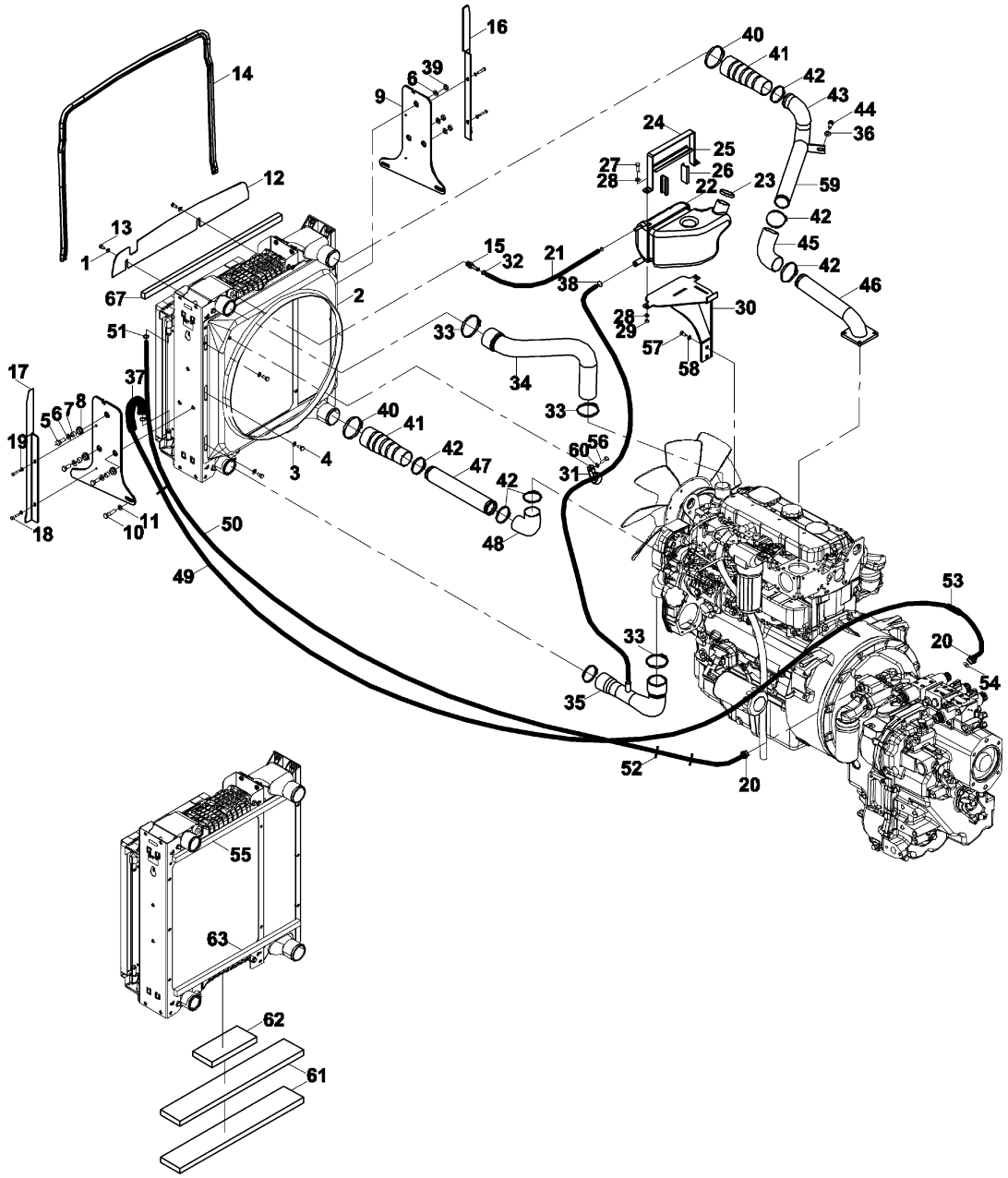

MOTOR SOĞUTMA MONTAJI
ENGINE COOLING MOUNTING

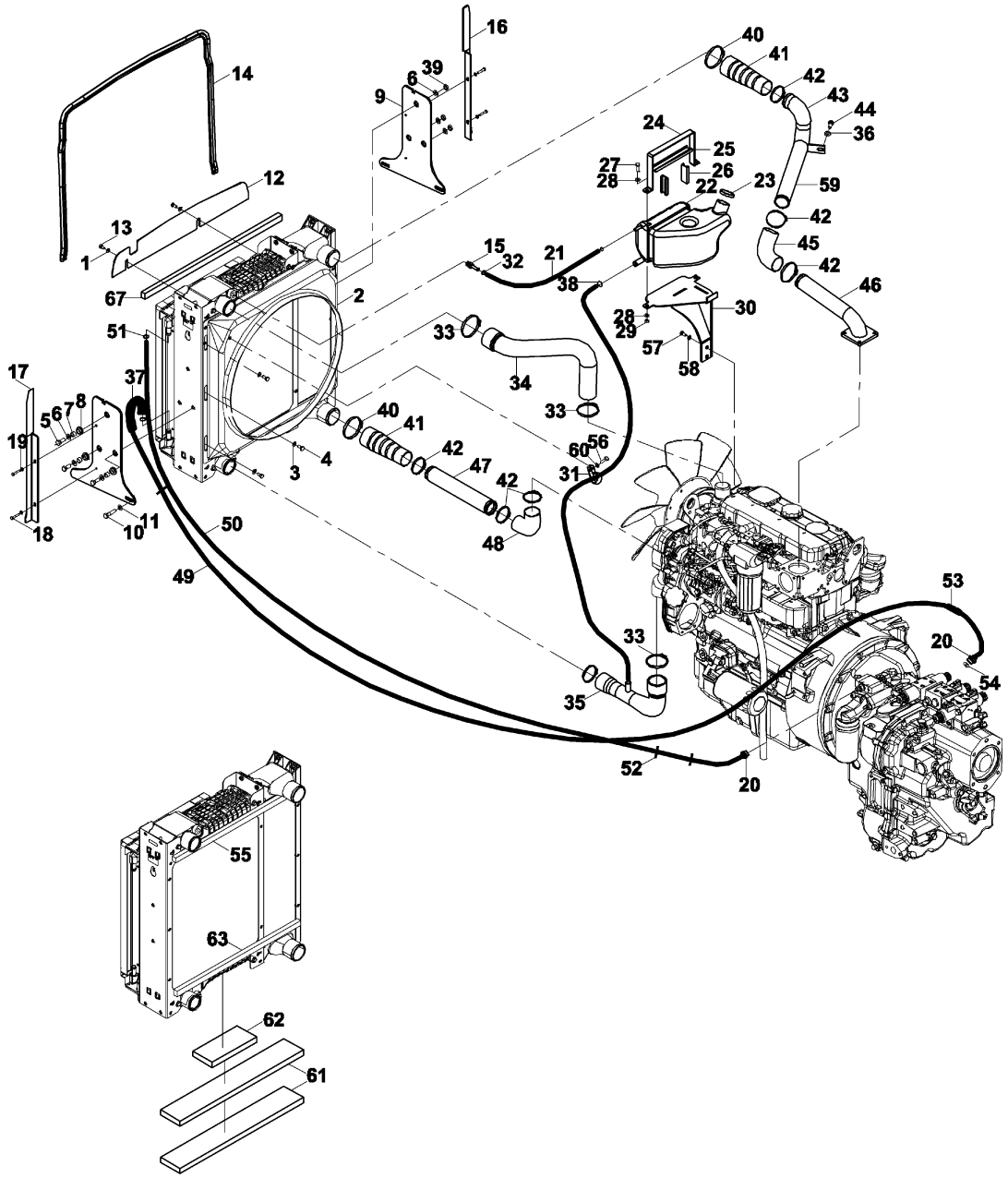

RADYATÖR KOMPLESİ
RADIATOR ASSEMBLY

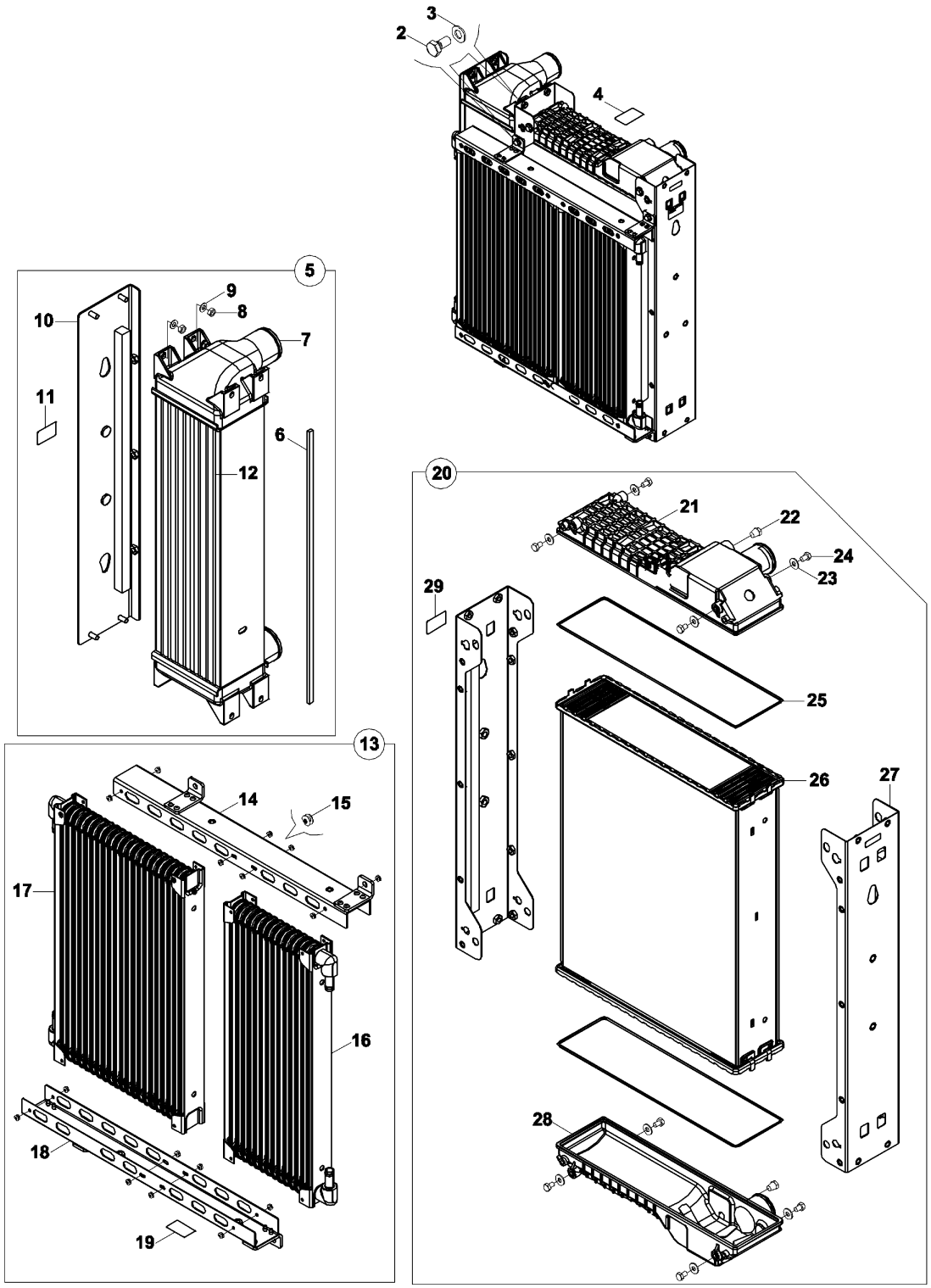

YAKIT SİSTEMİ
FUEL SYSTEM

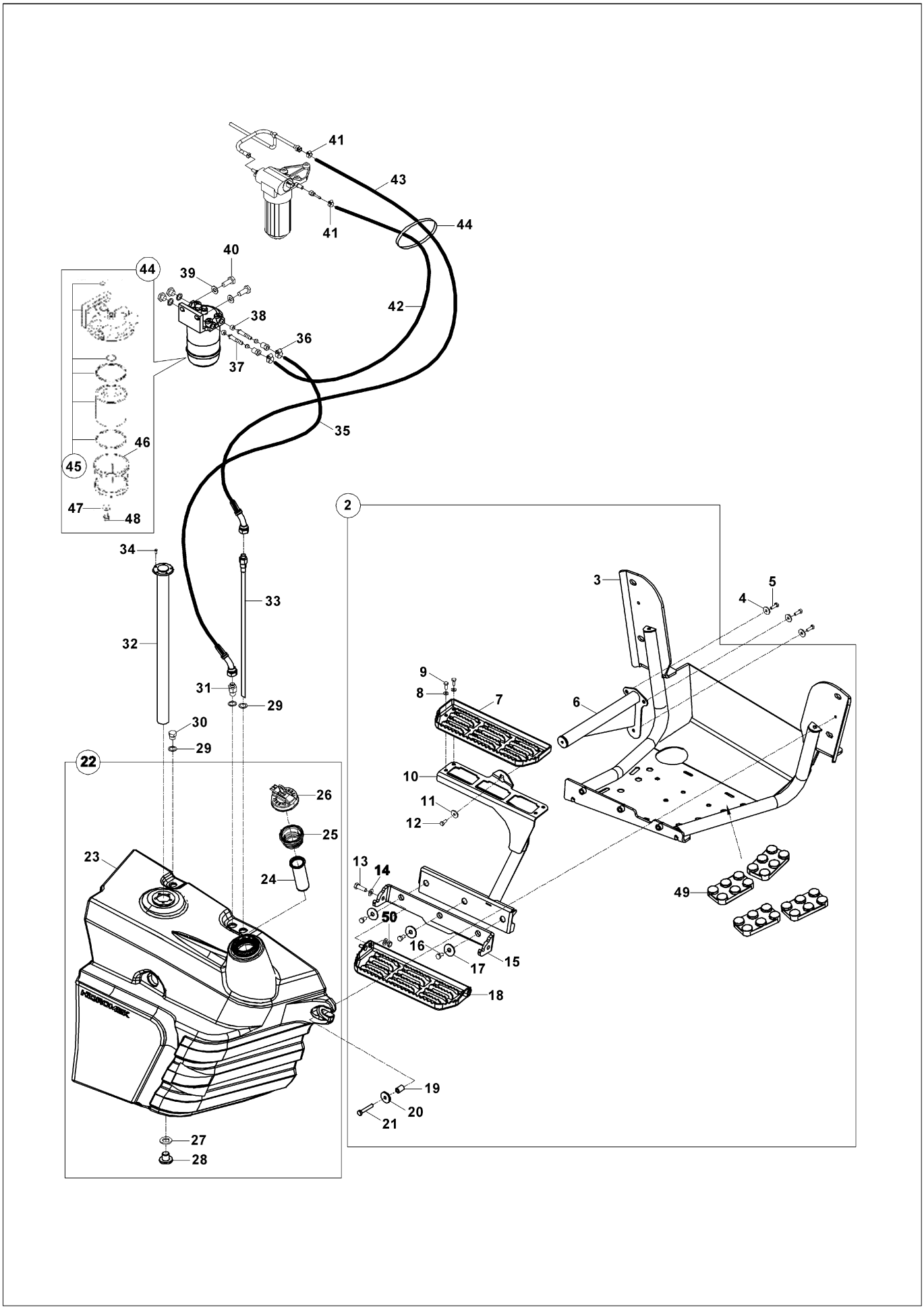

YAKIT SİSTEMİ
FUEL SYSTEM

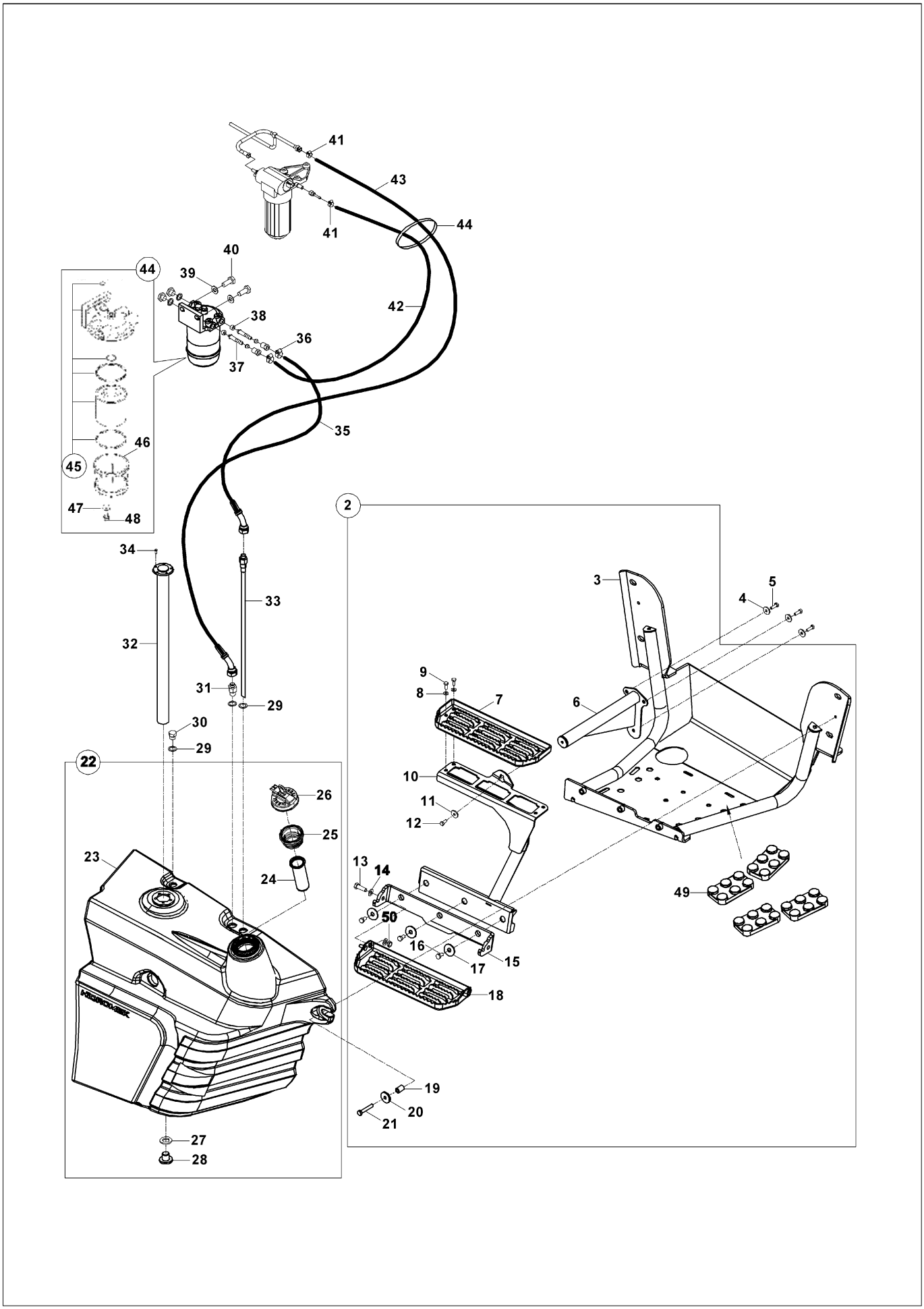

ISITMA, HAVALANDIRMA SİSTEMİ
HEATING VENTING SYSTEM

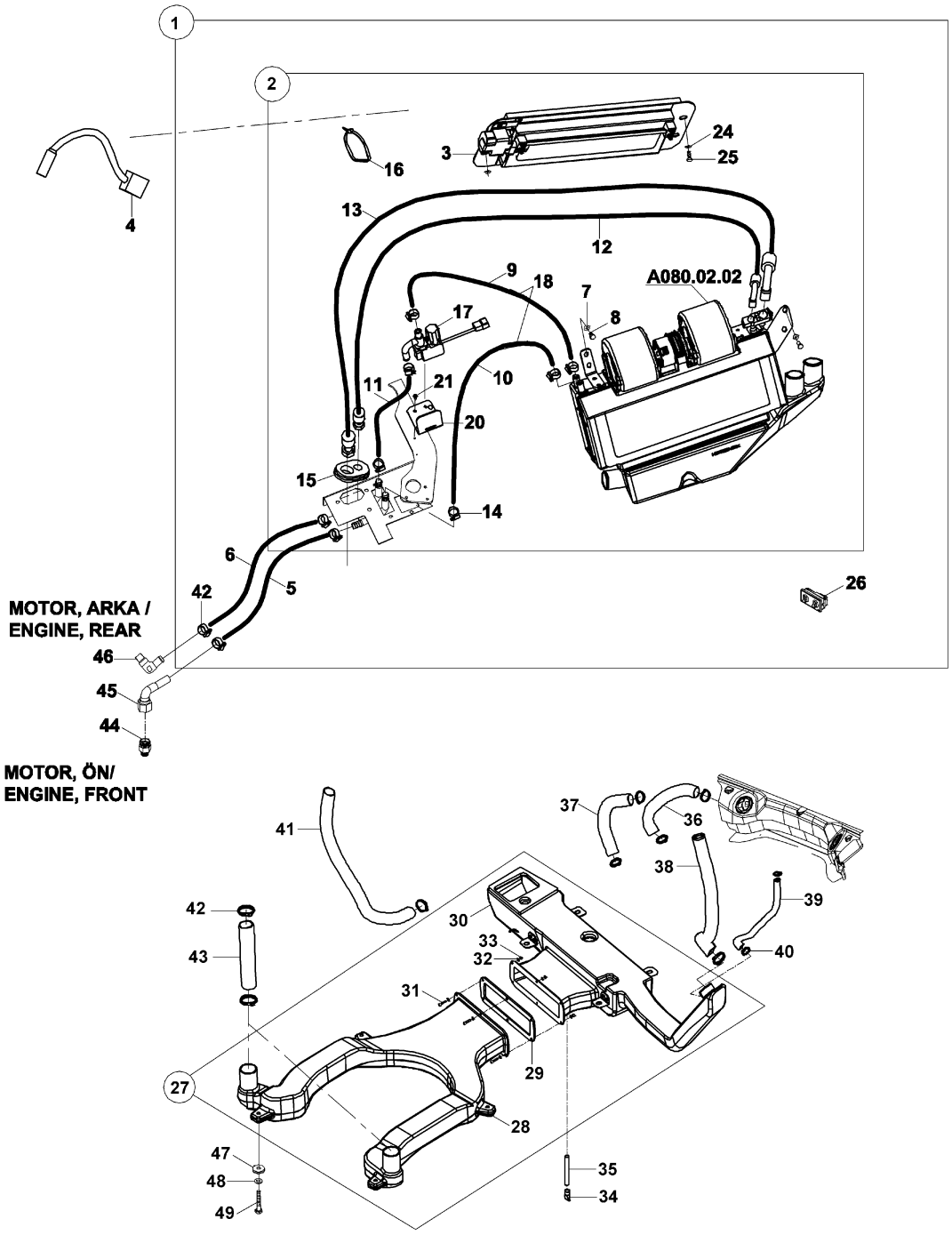

KALORİFER ÜNİTESİ
HEATER UNIT

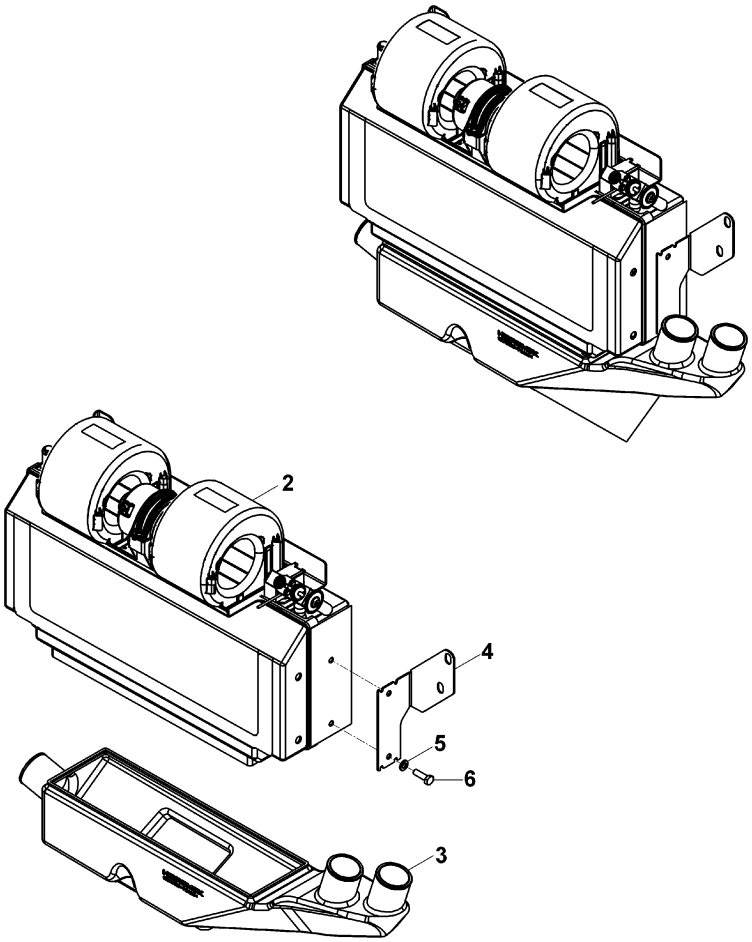

ISITMA, HAVALANDIRMA VE SOĞUTMA SİSTEMİ
HEATING VENTING AIR CONDITIONING SYSTEM

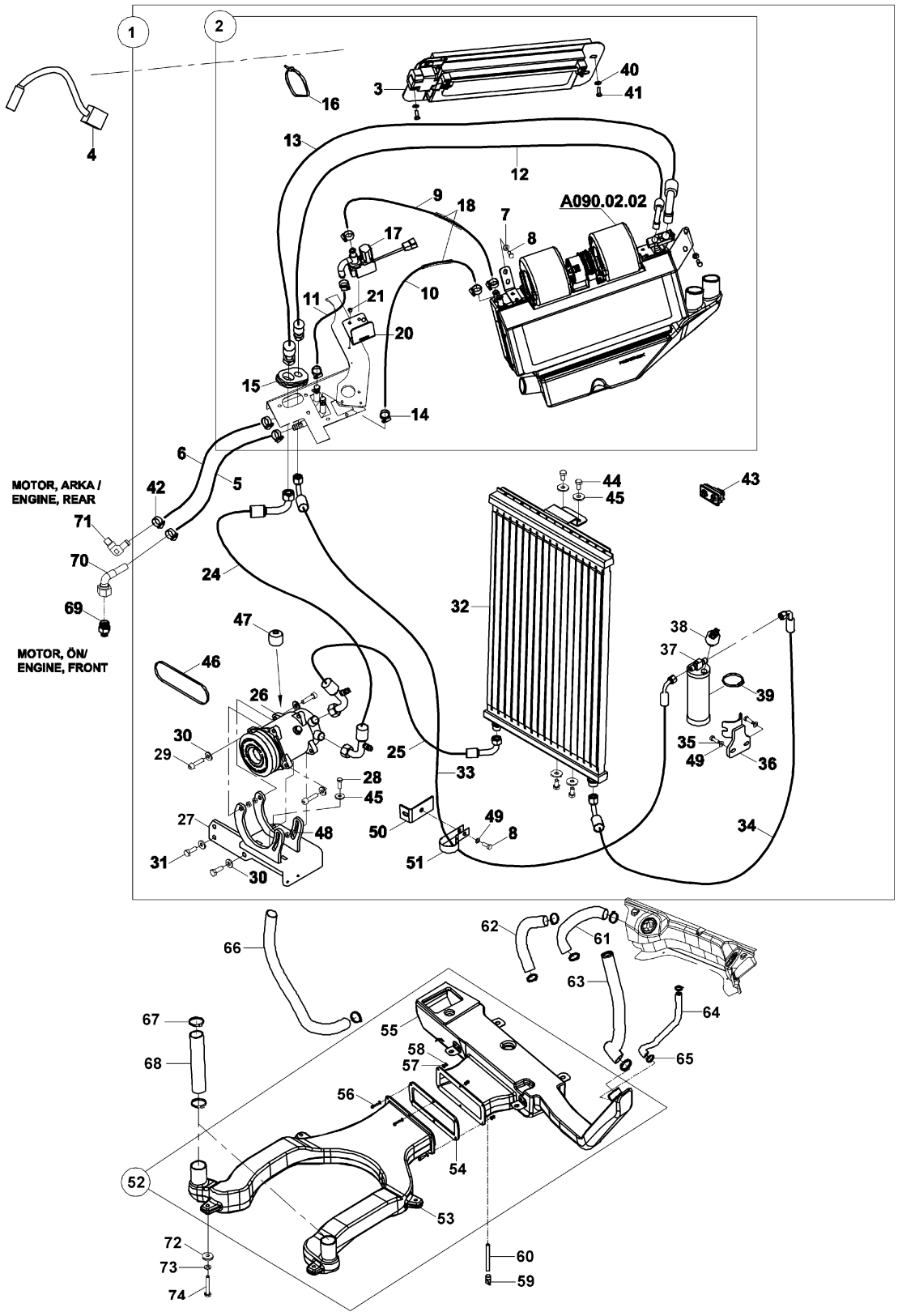

ISITMA, HAVALANDIRMA VE SOĞUTMA SİSTEMİ
HEATING VENTING AIR CONDITIONING SYSTEM

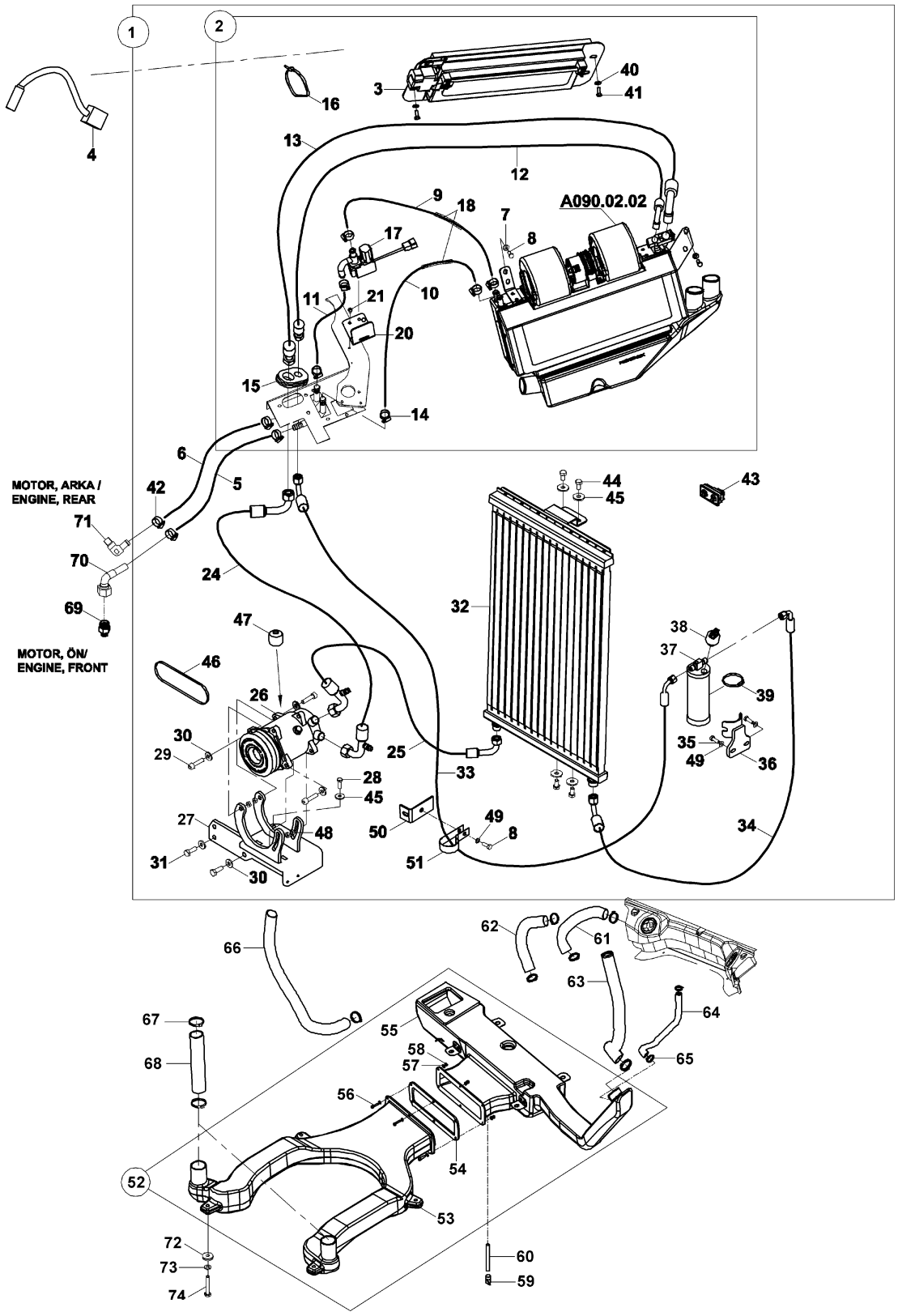

KLİMA ÜNİTESİ
AIR CONDITIONER UNIT

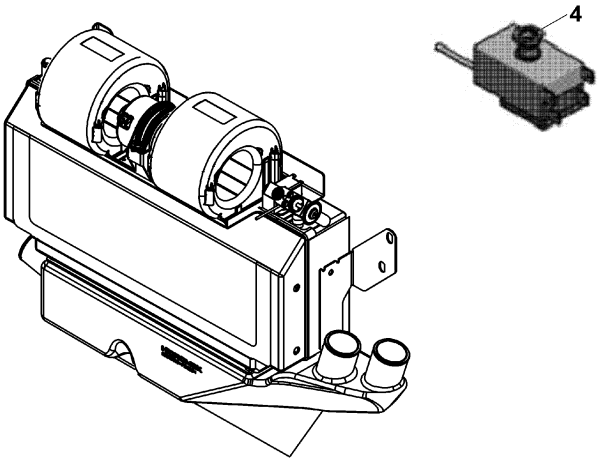

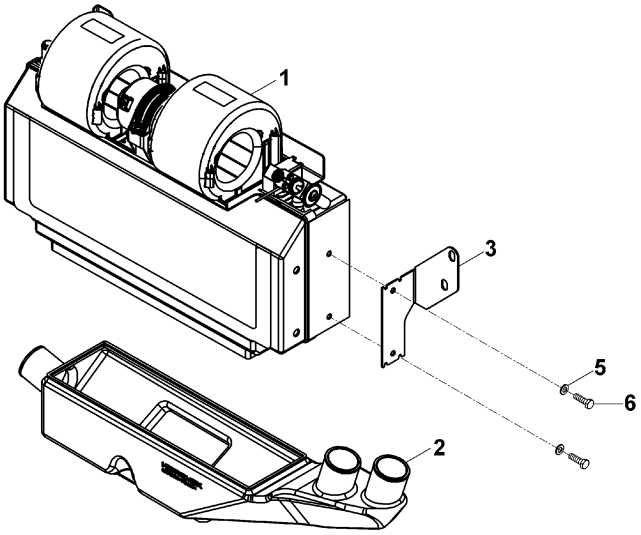

ŞASİ
CHASSIS

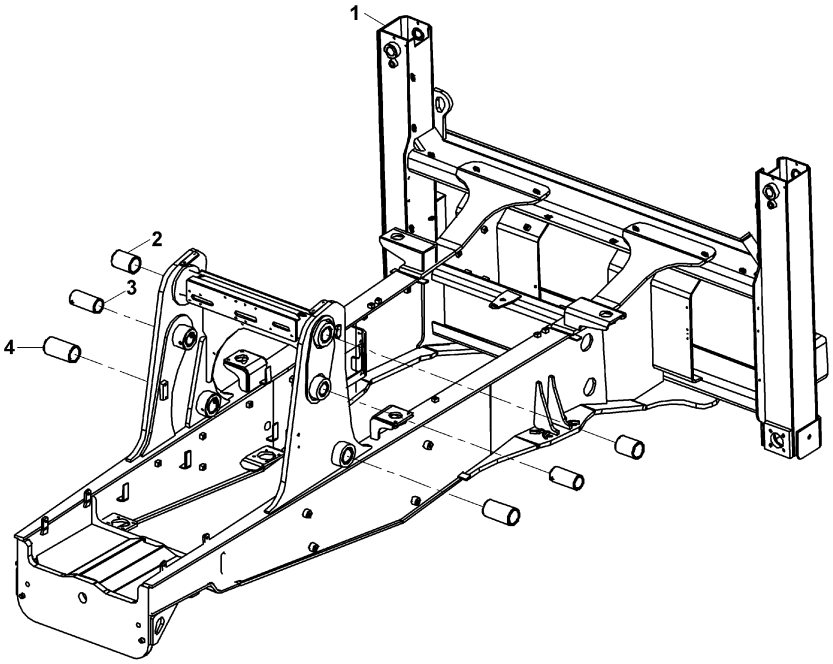

AYAK, KIZAK
STABILIZER, SIDESHIFT

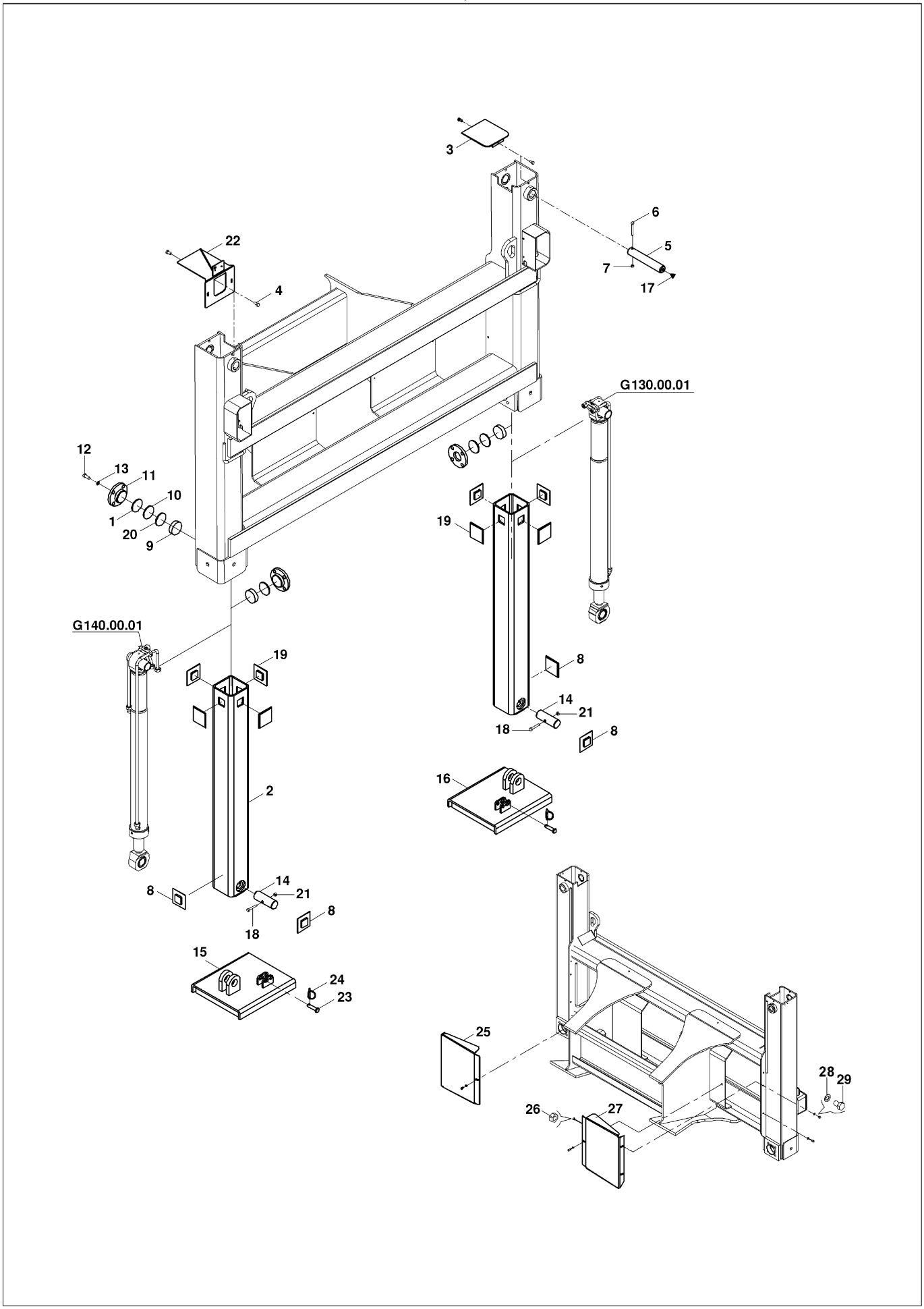

KIZAK PAPUCU
STABILIZER PADS

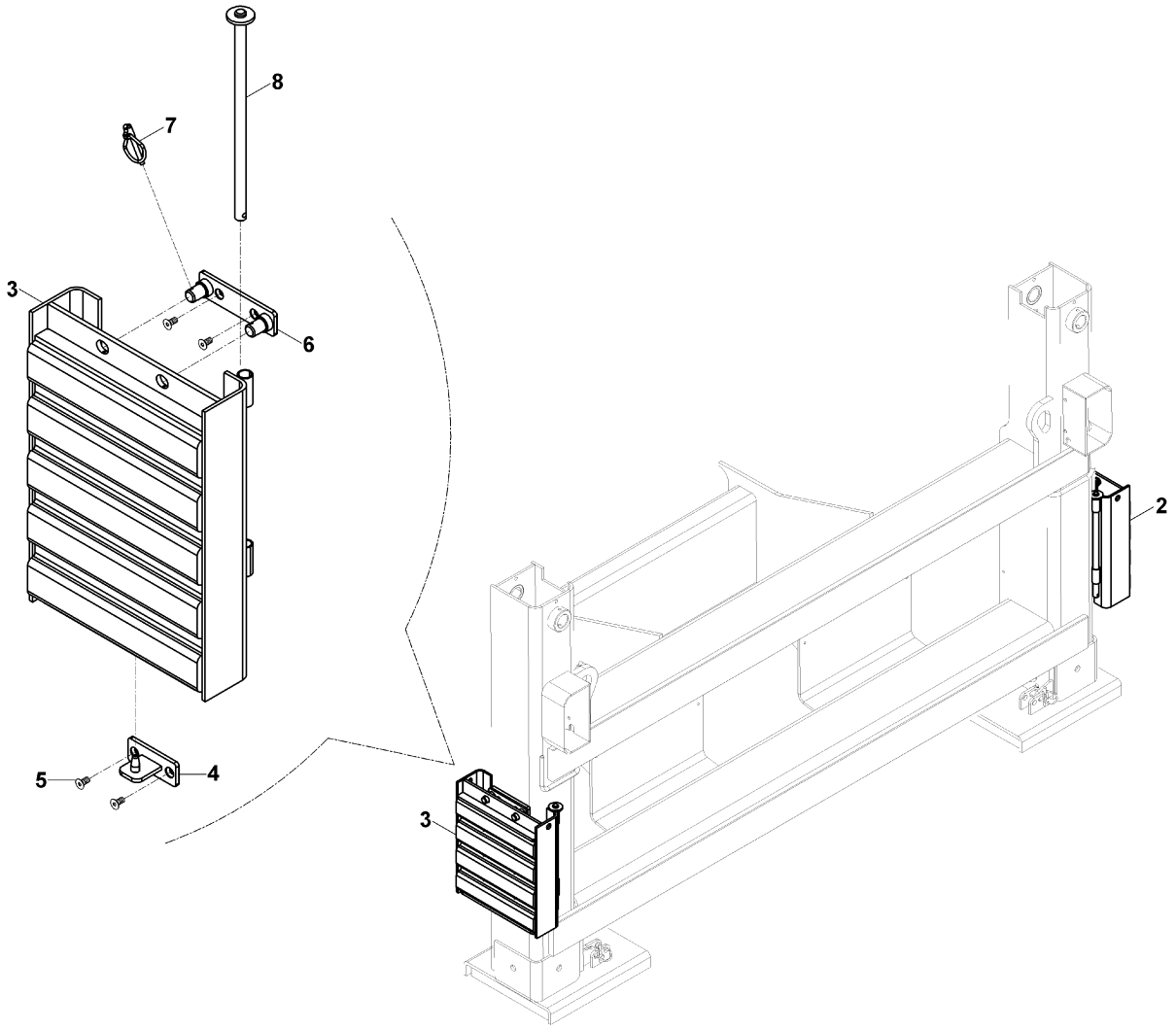

DÖNÜŞ TABLASI
KINGPOST CARRIAGE

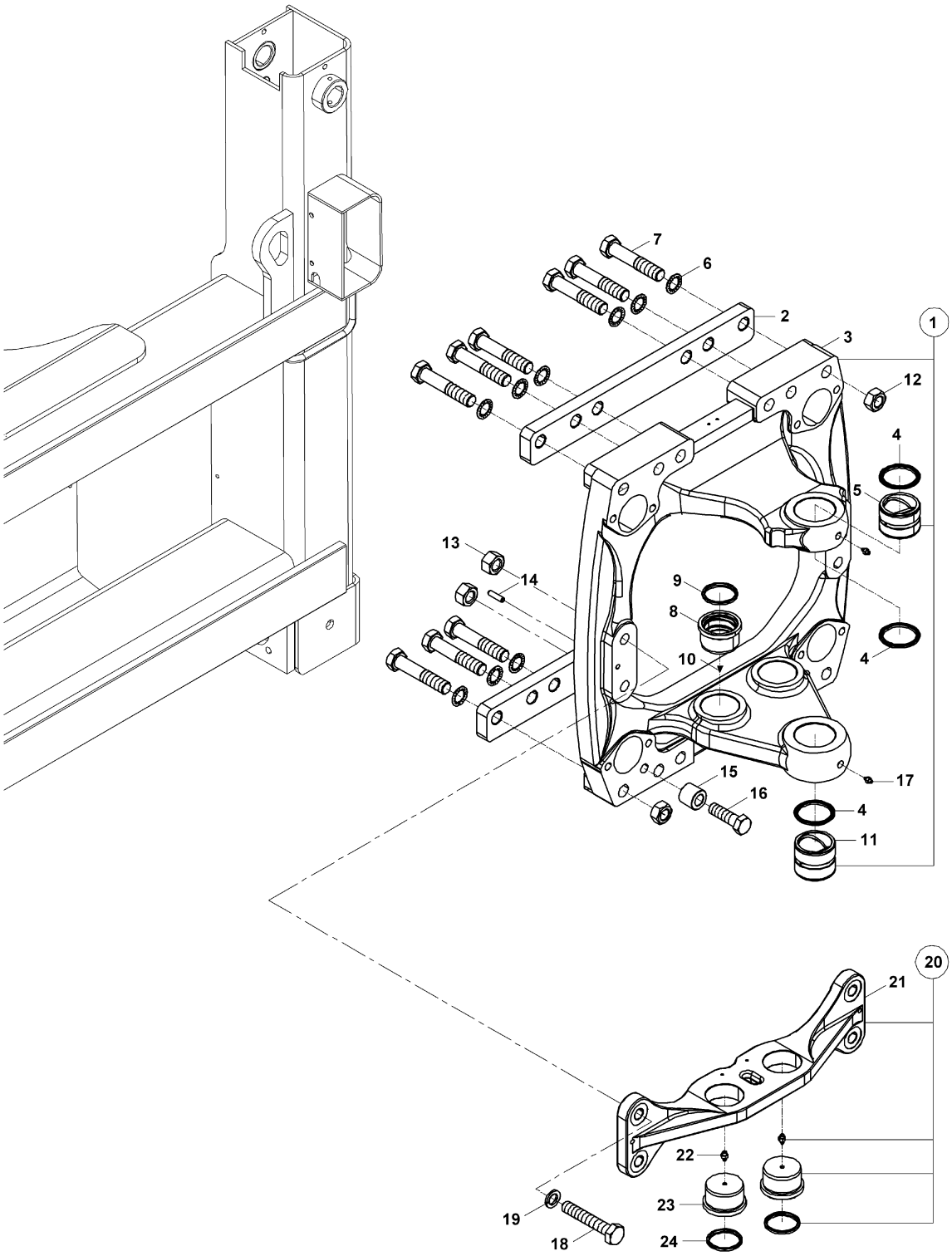

DÖNÜŞ KUTUSU
KINGPOST

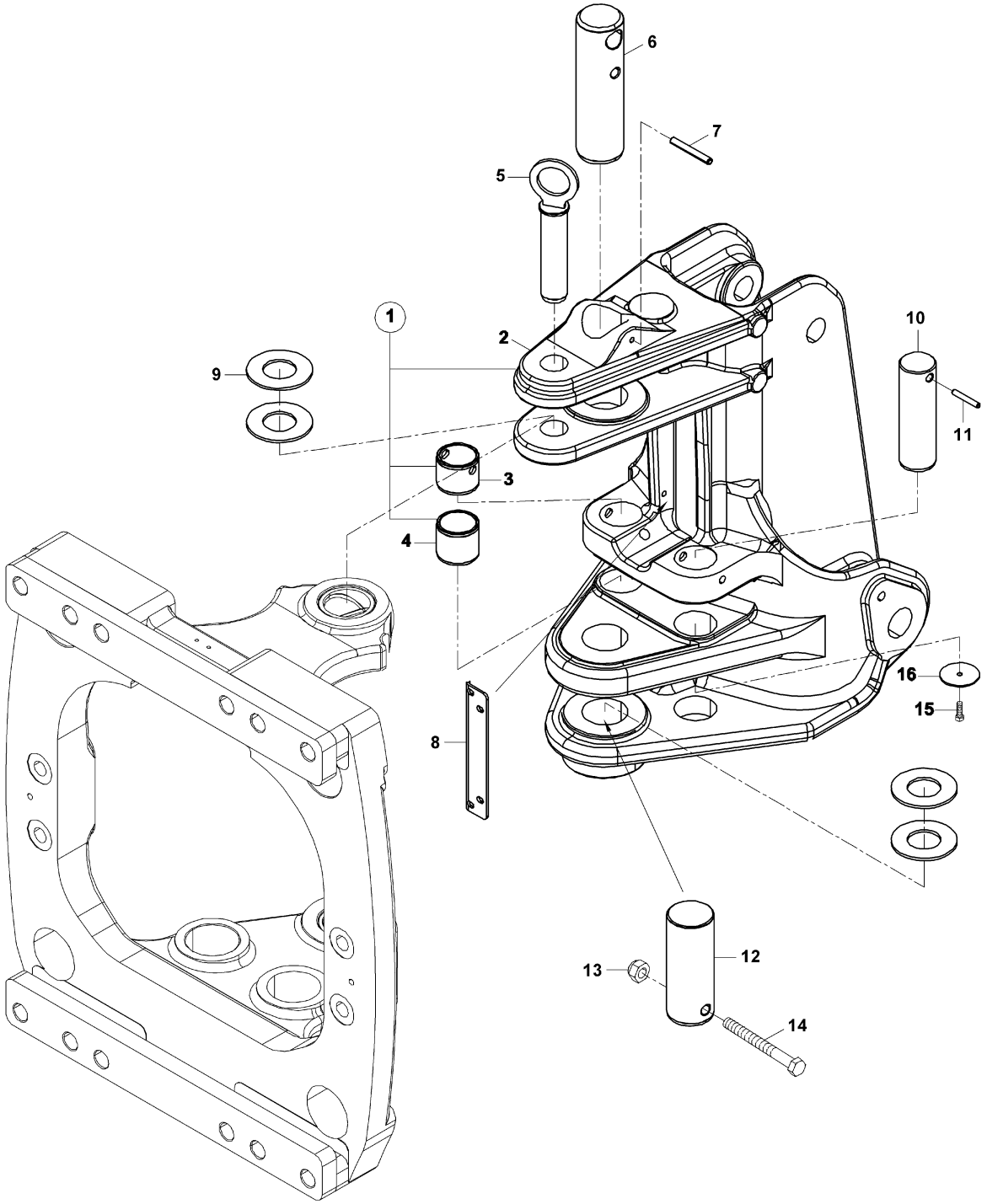

KAPUT- PANEL- PANJUR- YAN KAPAK MONTAJI
BONNET- PANEL- FRONT GRILL- SIDE COVER MOUNTING

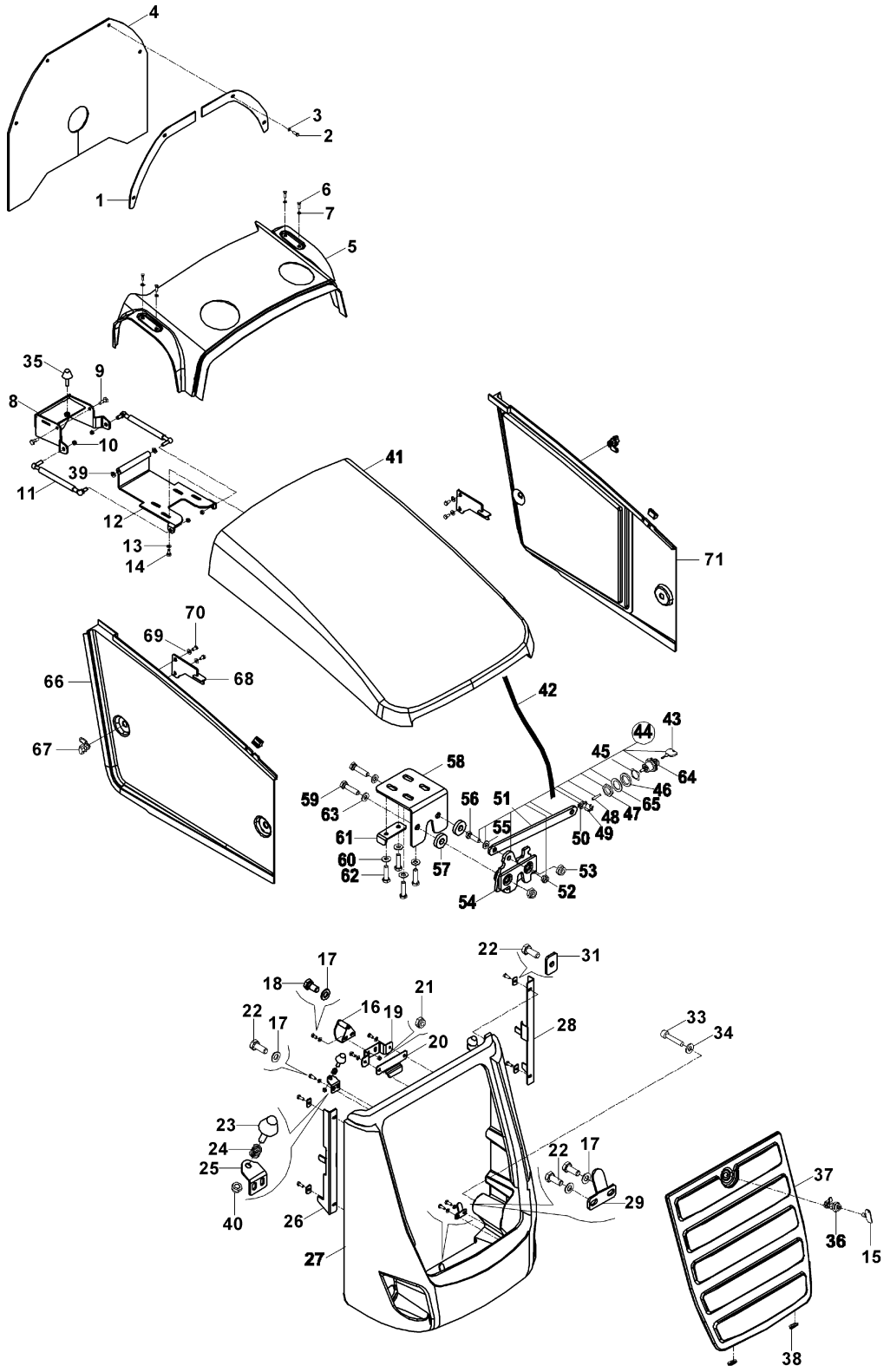

KAPUT- PANEL- PANJUR- YAN KAPAK MONTAJI
BONNET- PANEL- FRONT GRILL- SIDE COVER MOUNTING

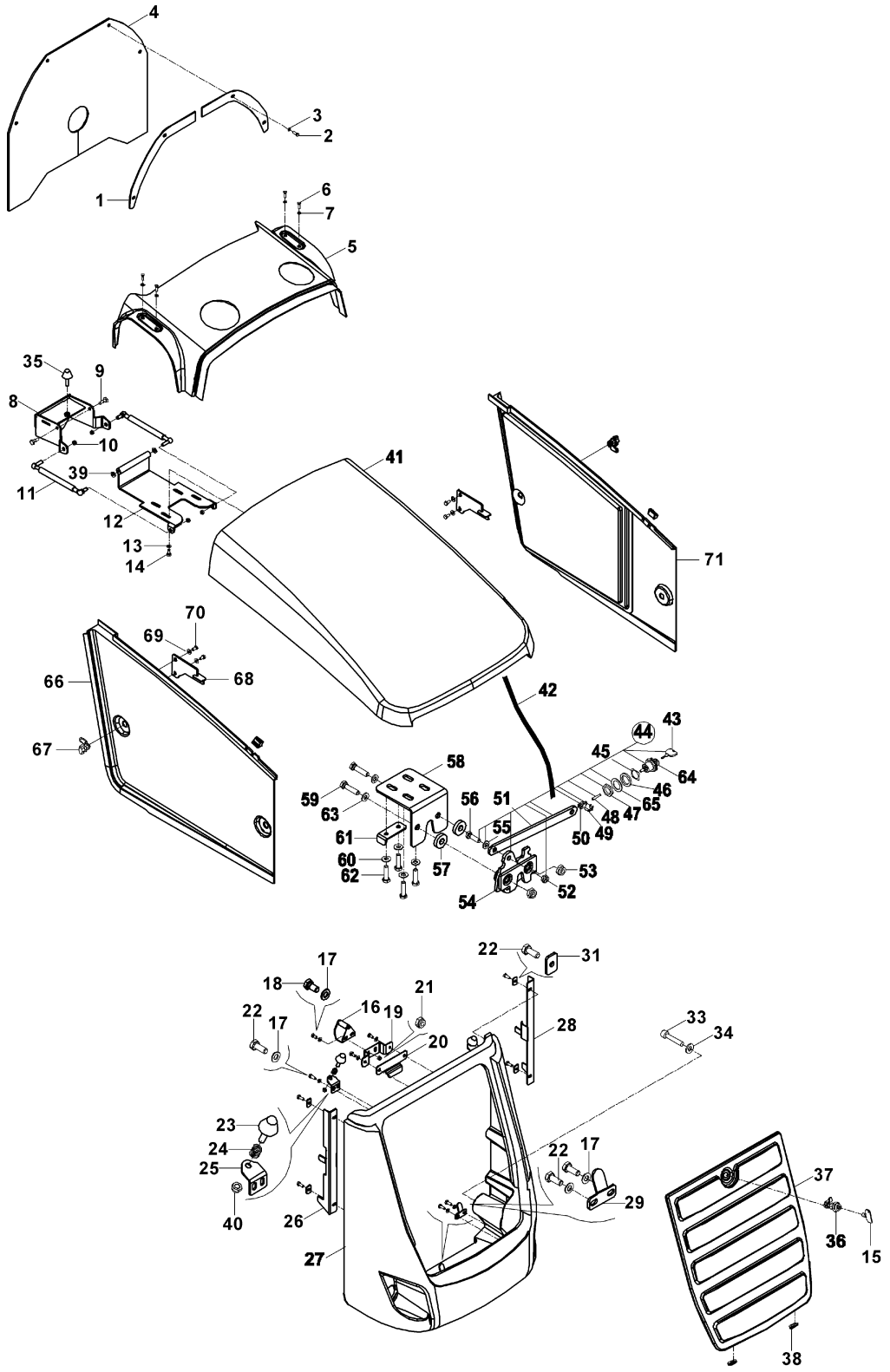

ÇAMURLUKLAR, ÖN
FENDERS, FRONT

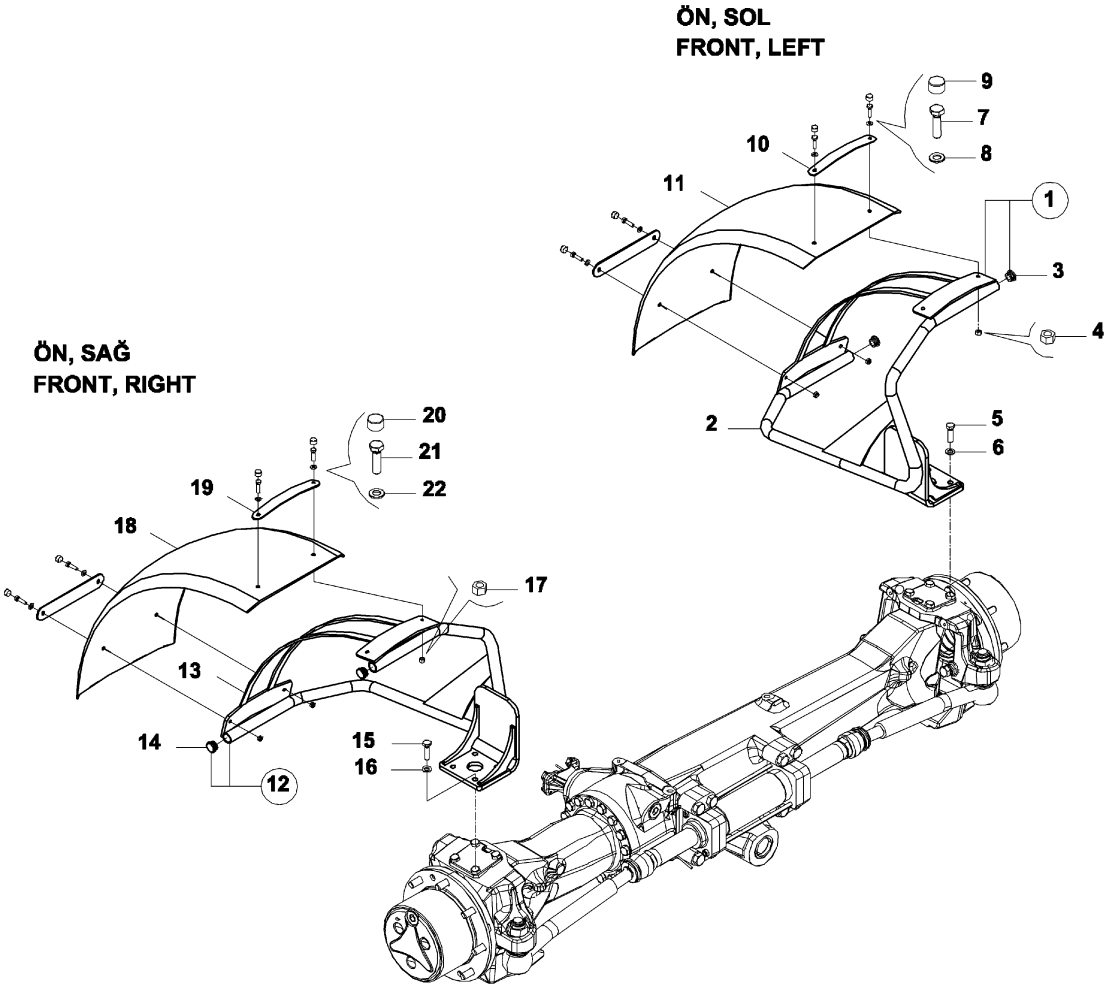

ÇAMURLUK, ARKA
FENDER, REAR

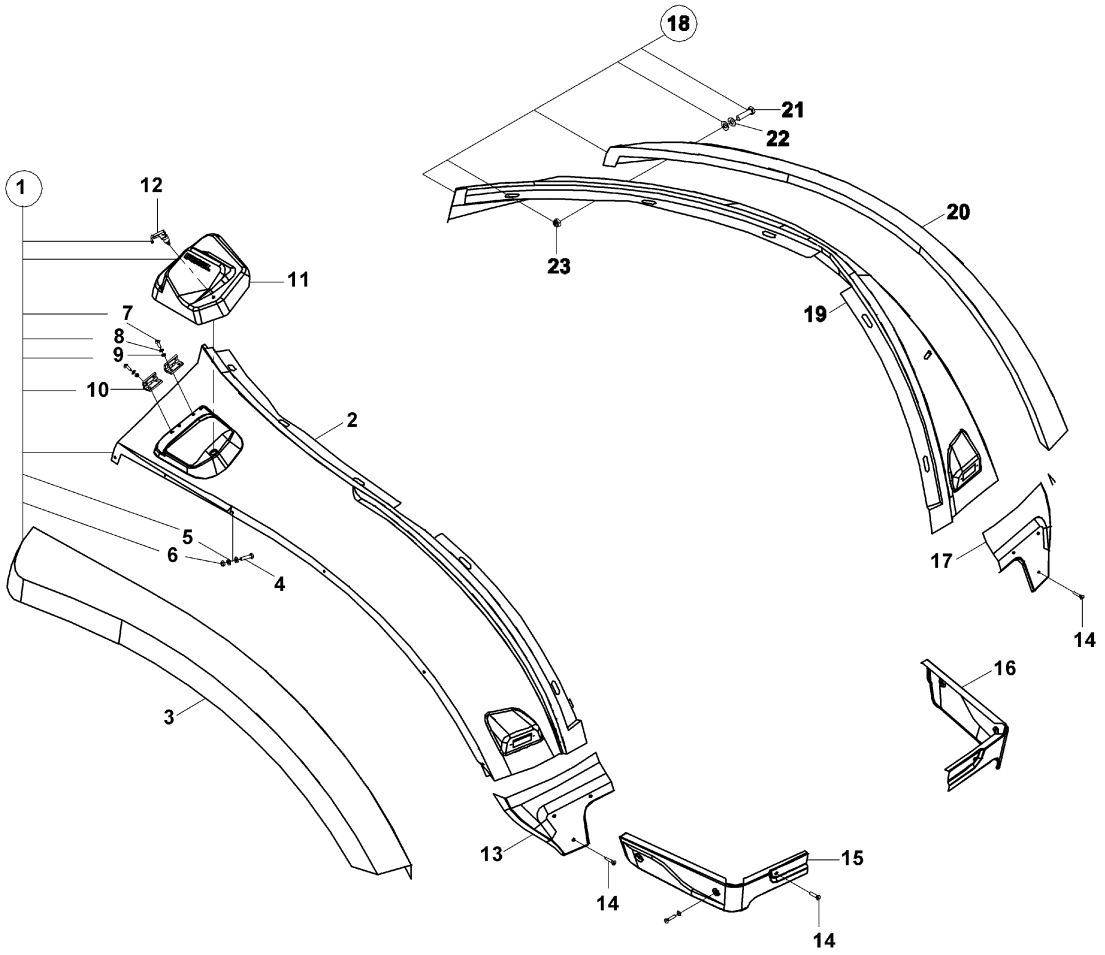

KABİN VE BAĞLANTI TAKOZLARI
CAB & CAB MOUNTING

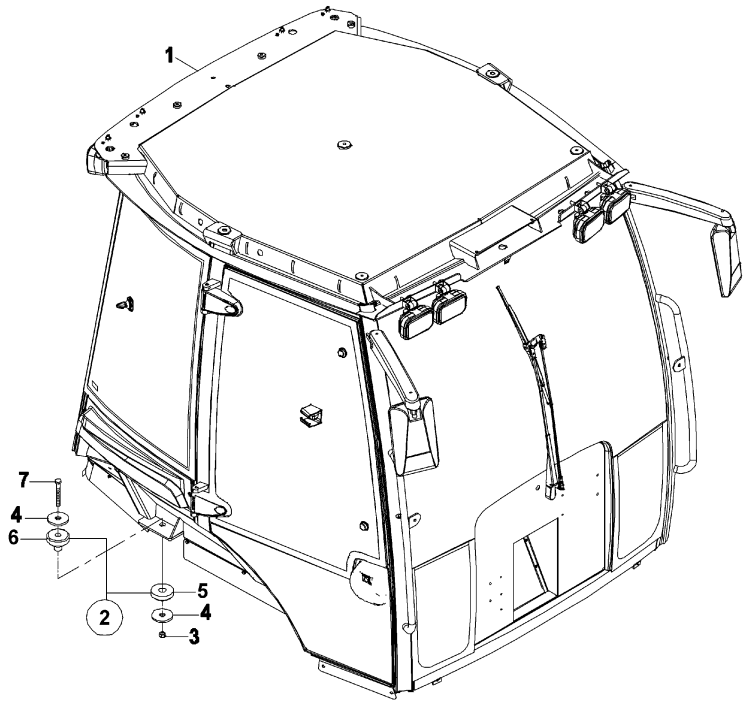

KAPI VE CAMLAR, SAĞ
DOOR AND WINDOW, RH

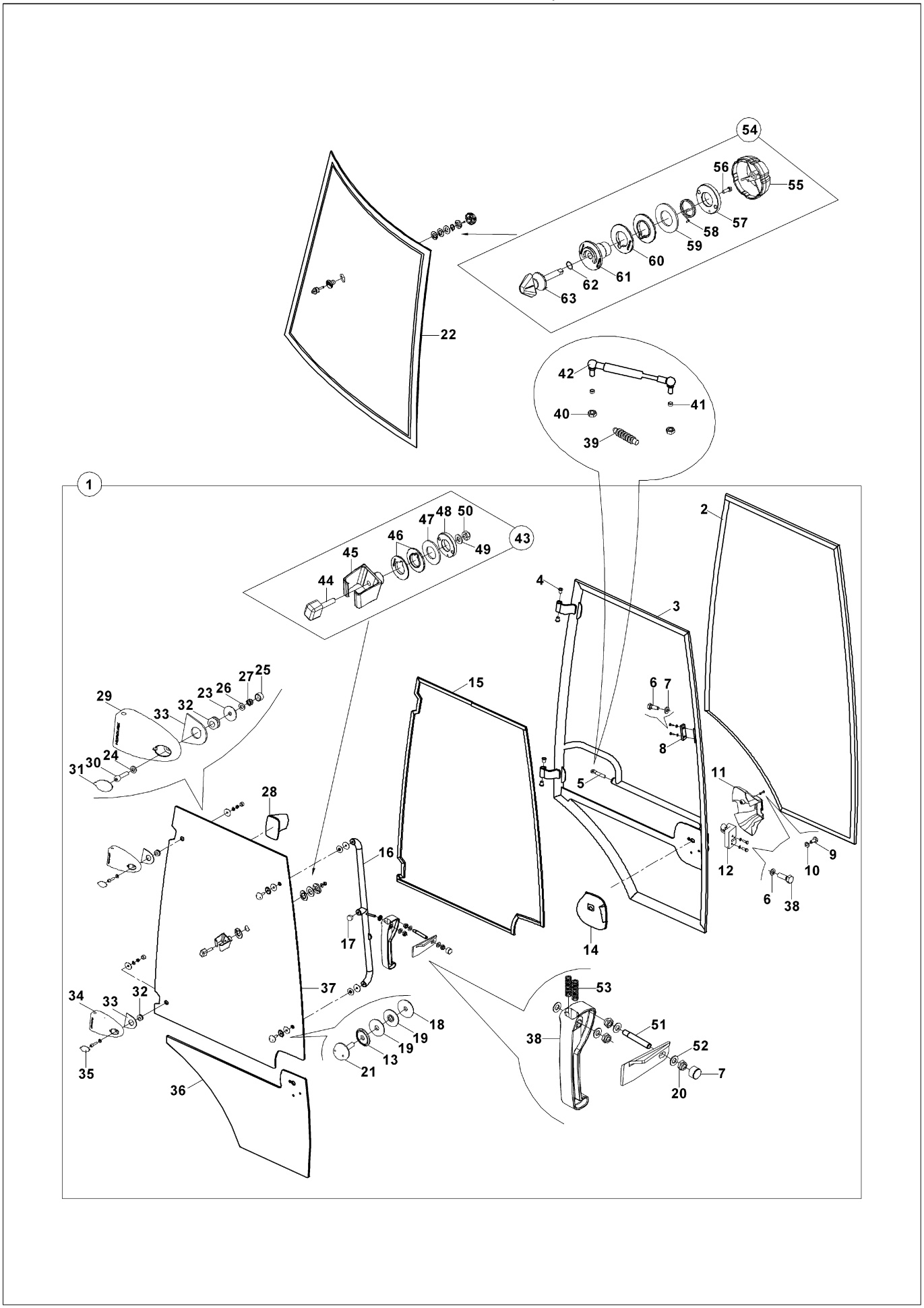

KAPI VE CAMLAR, SAĞ
DOOR AND WINDOW, RH

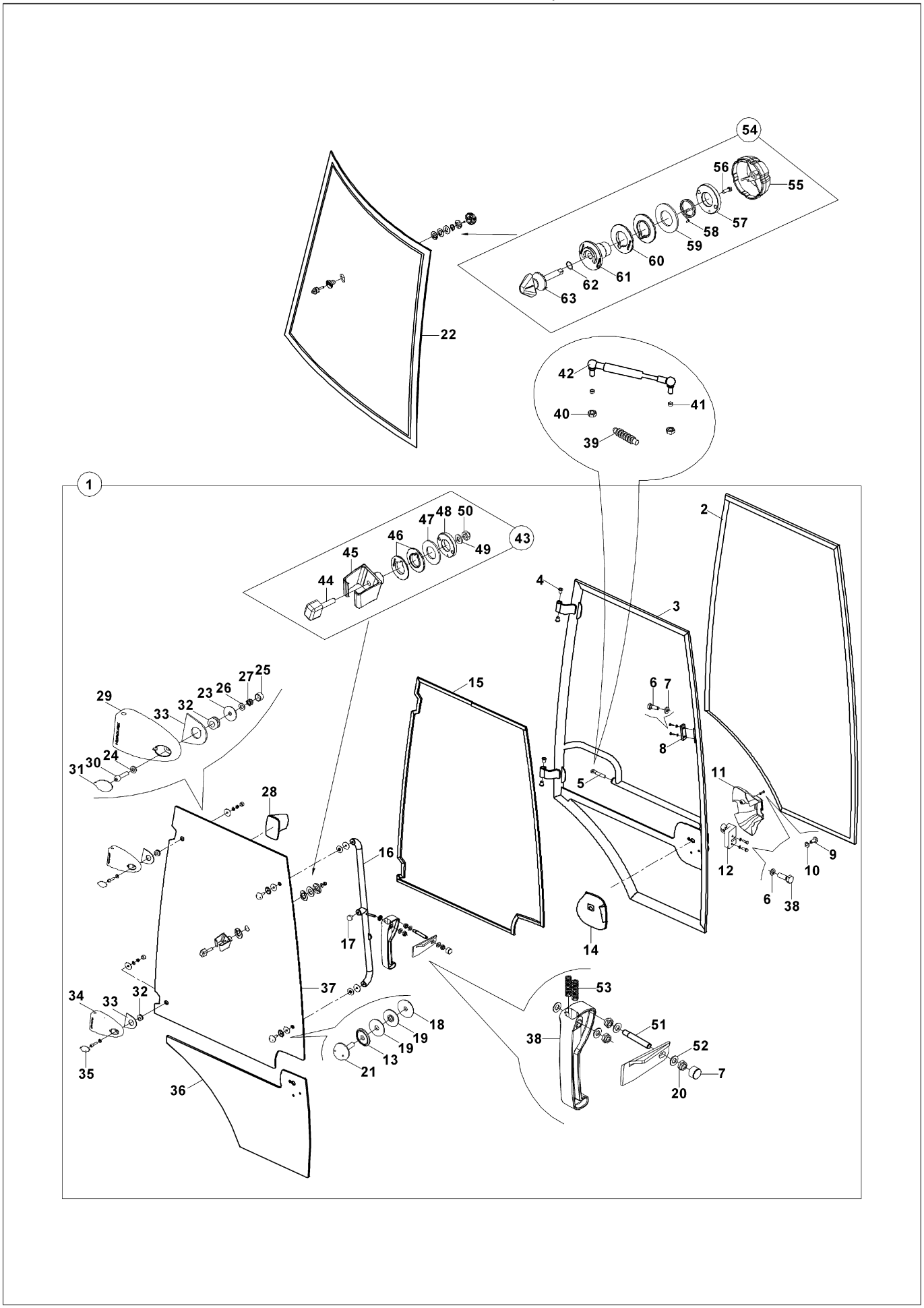

KAPI VE CAMLAR, SOL
DOOR AND WINDOW, LH

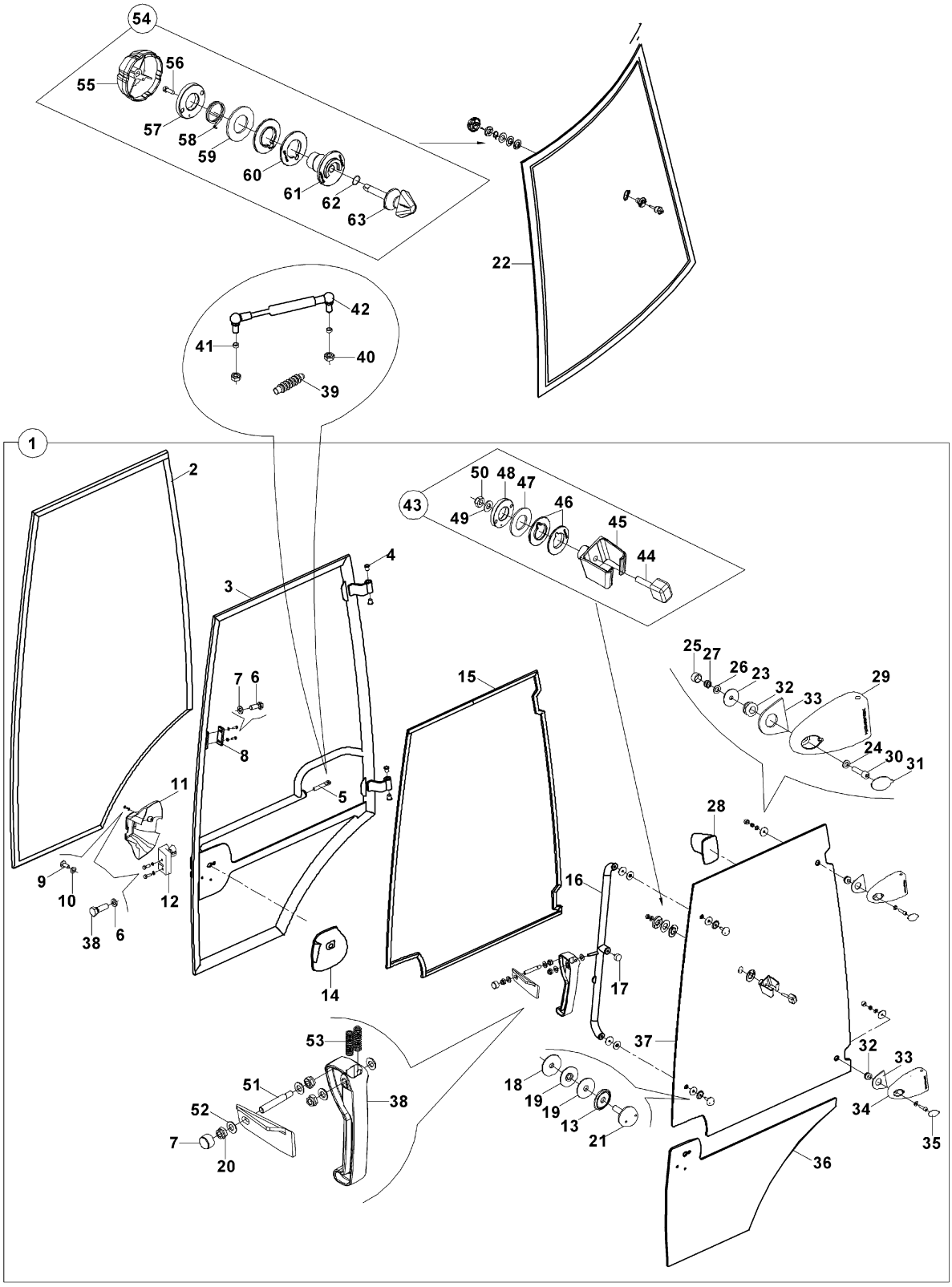

KAPI VE CAMLAR, SOL
DOOR AND WINDOW, LH

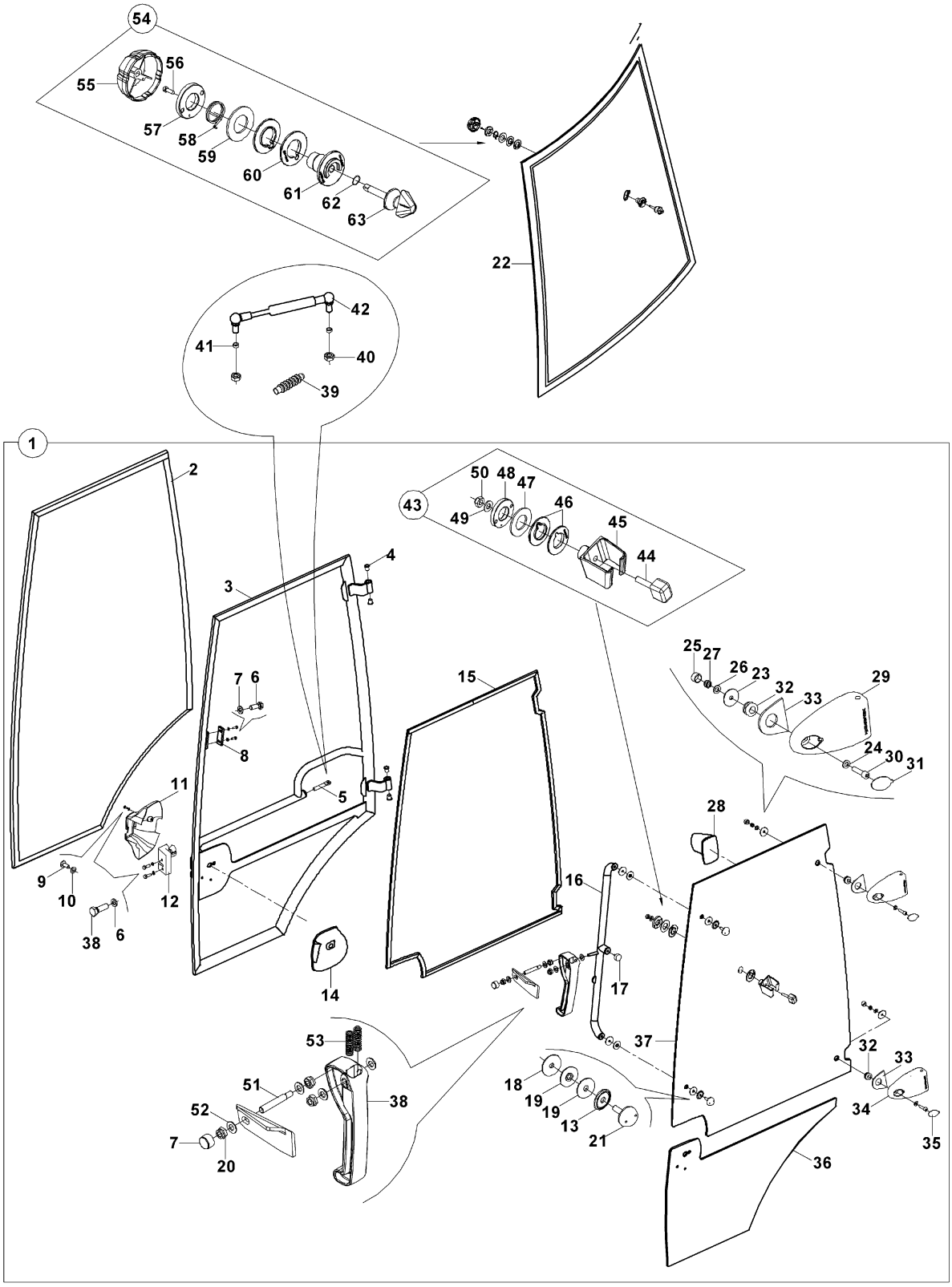

CAMLAR, ÖN - ARKA
WINDOWS, FRONT - REAR

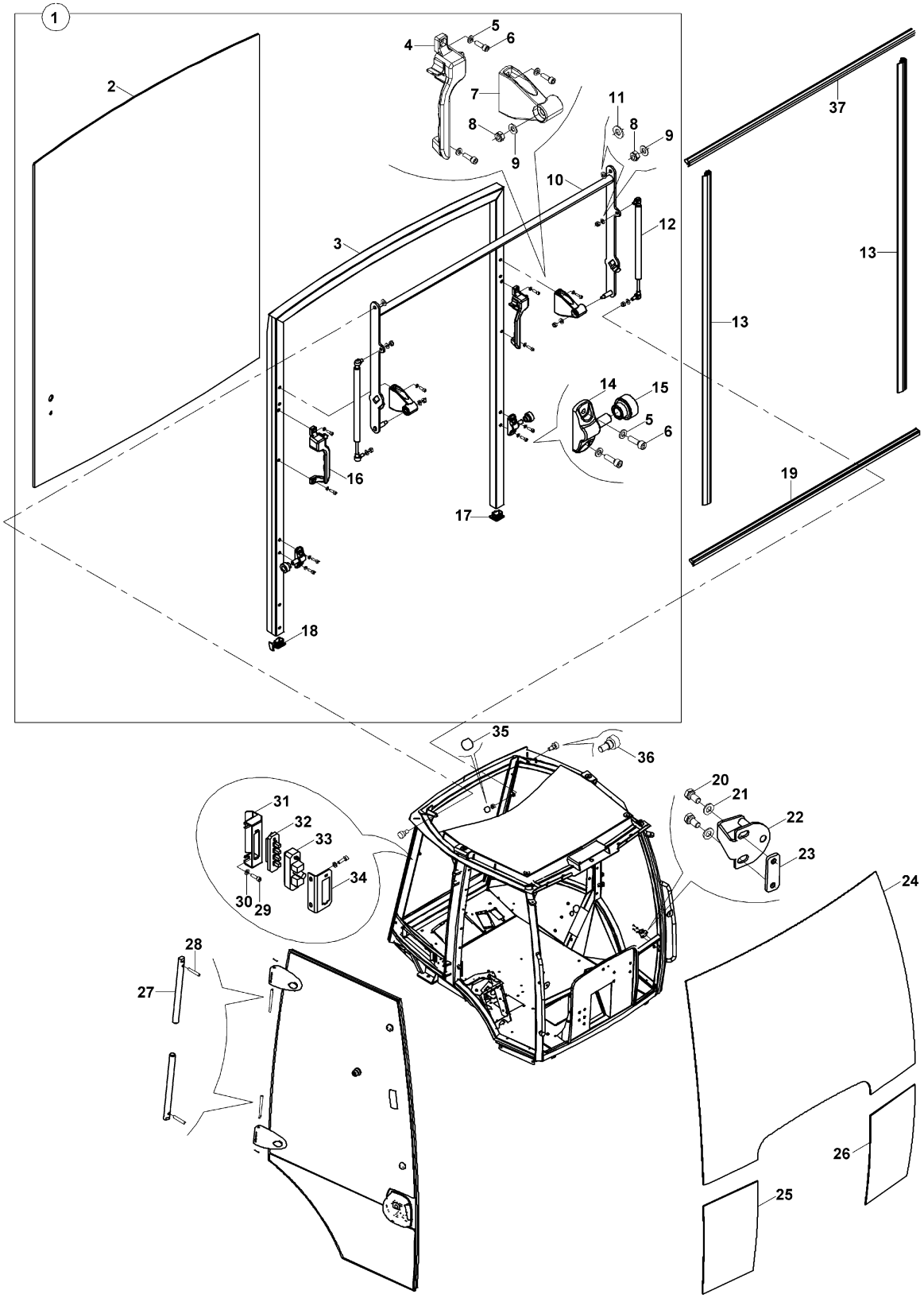

KABİN DONANIMI
CAB ACCESSORIES

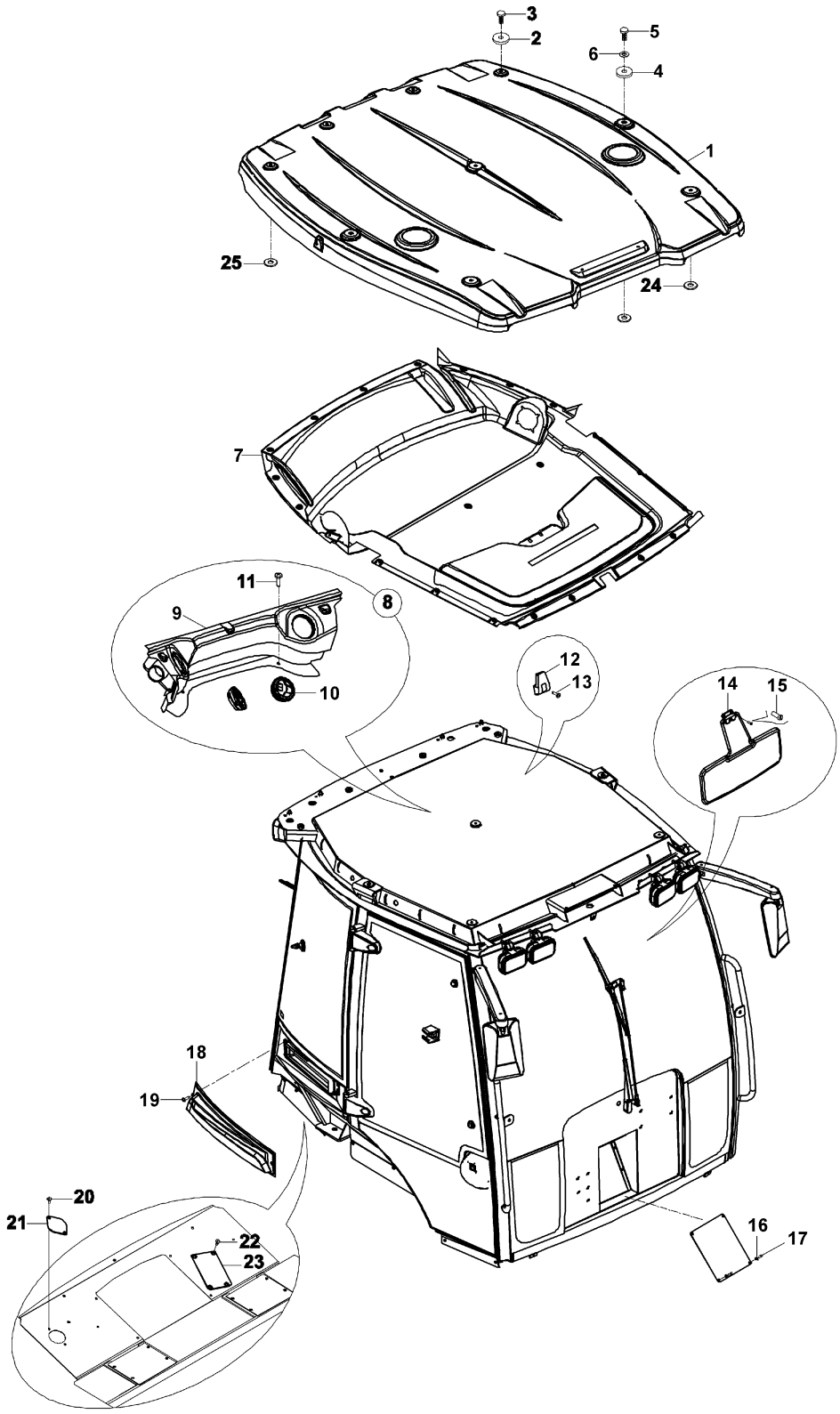

KABİN (LEVYE MEKANİZMALI)
CAB (LEVERS MECHANISM)

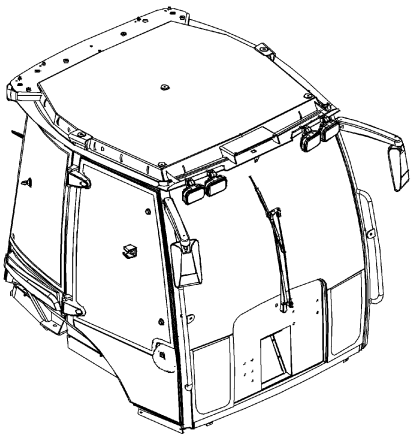

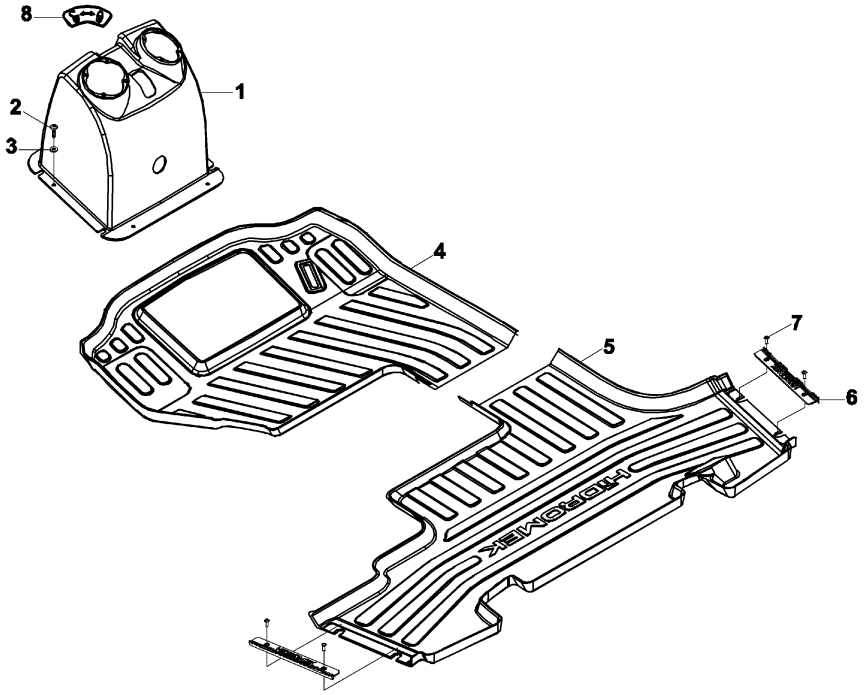

KABİN (JOYSTİK MEKANİZMALI)
CAB (JOYSTICK MECHANISM)

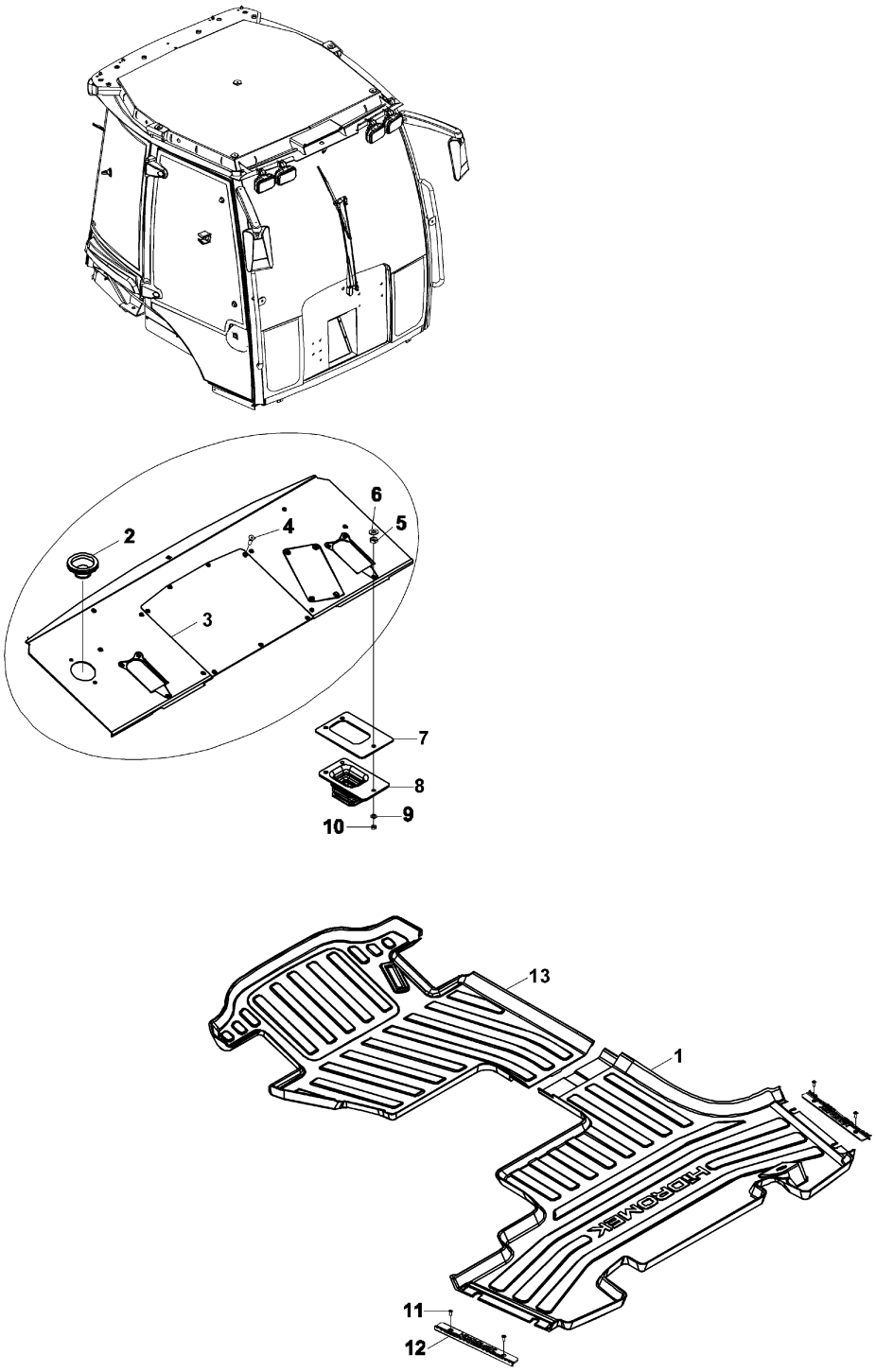

KABİN (JOYSTİK MEKANİZMALI)
CAB (JOYSTICK MECHANISM)

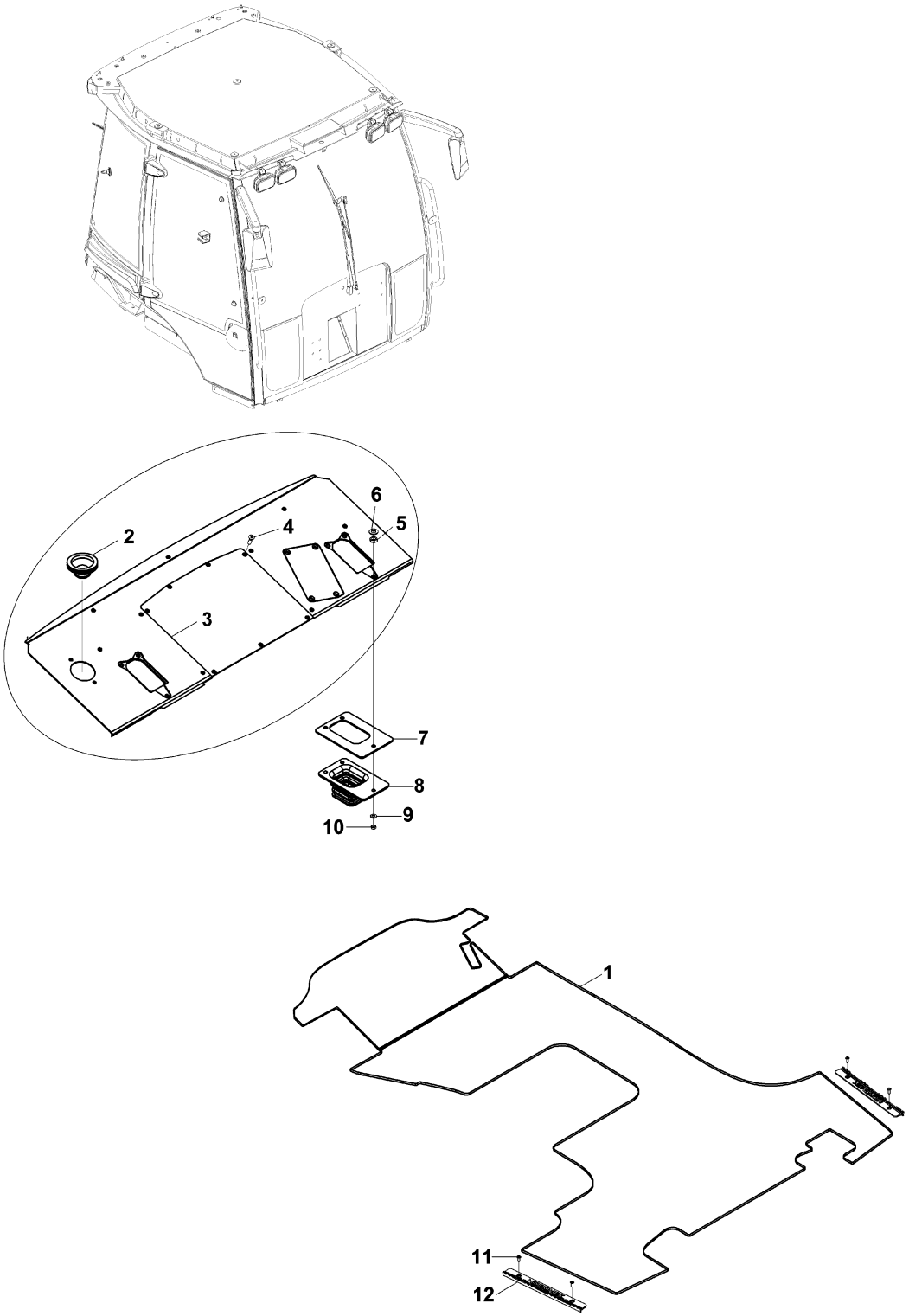

KONSOL, ÖN
CONSOLE, FRONT

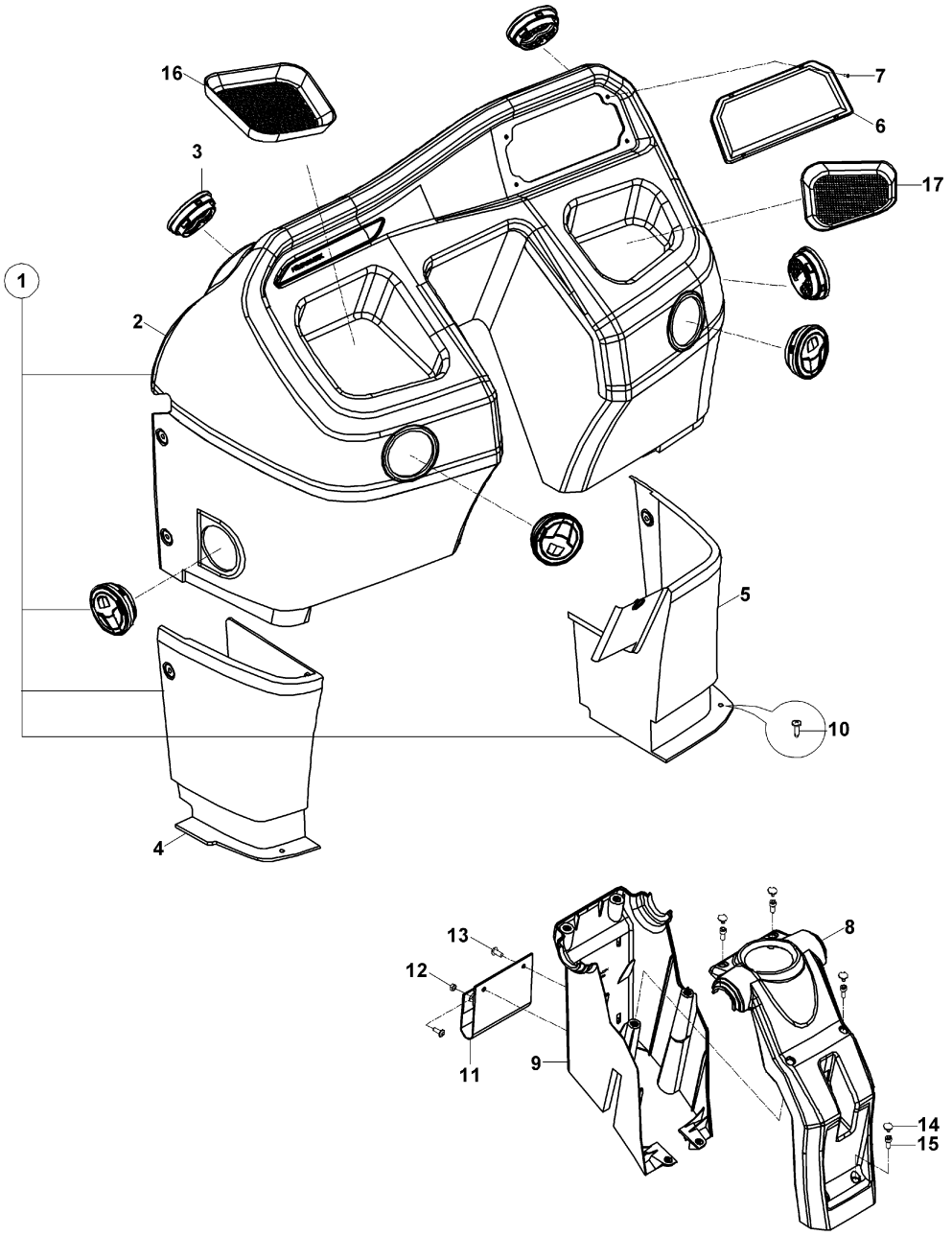

KONSOL, SOL
CONSOLE, LH

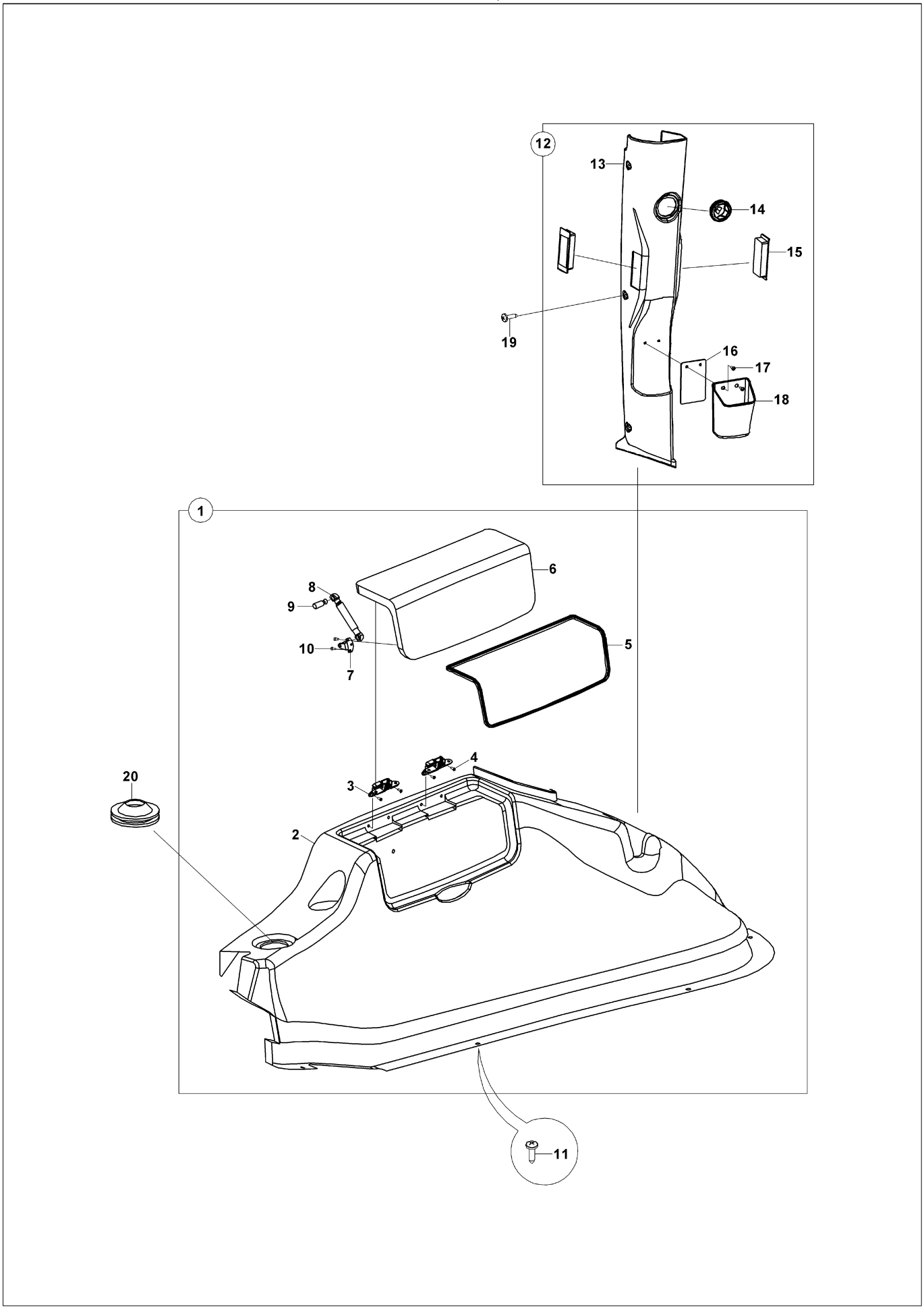

KONSOL, SAĞ
CONSOLE, RH

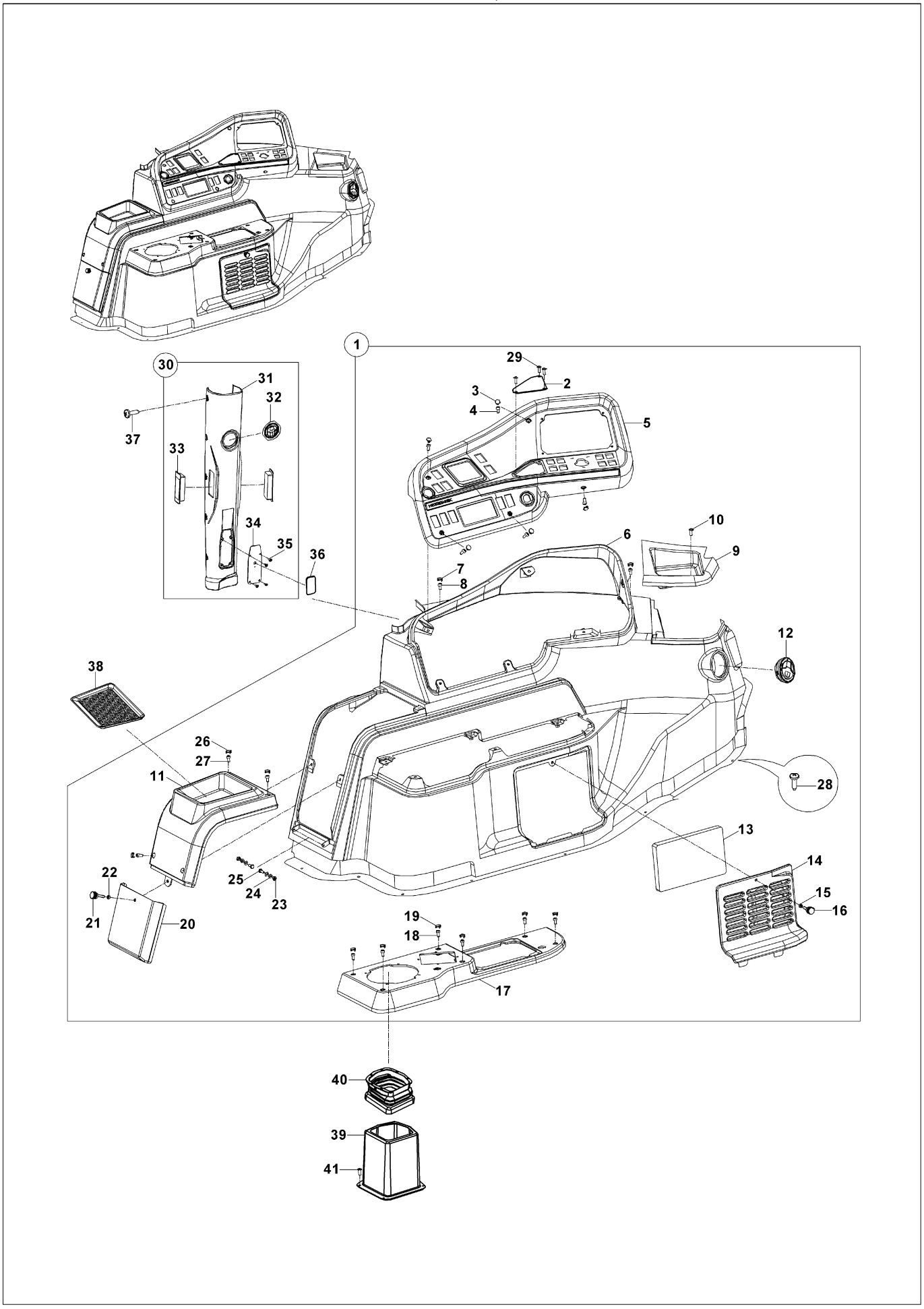

JOYSTİCK MEKANİZMASI, SAĞ
JOYSTICK MECHANISM, RH

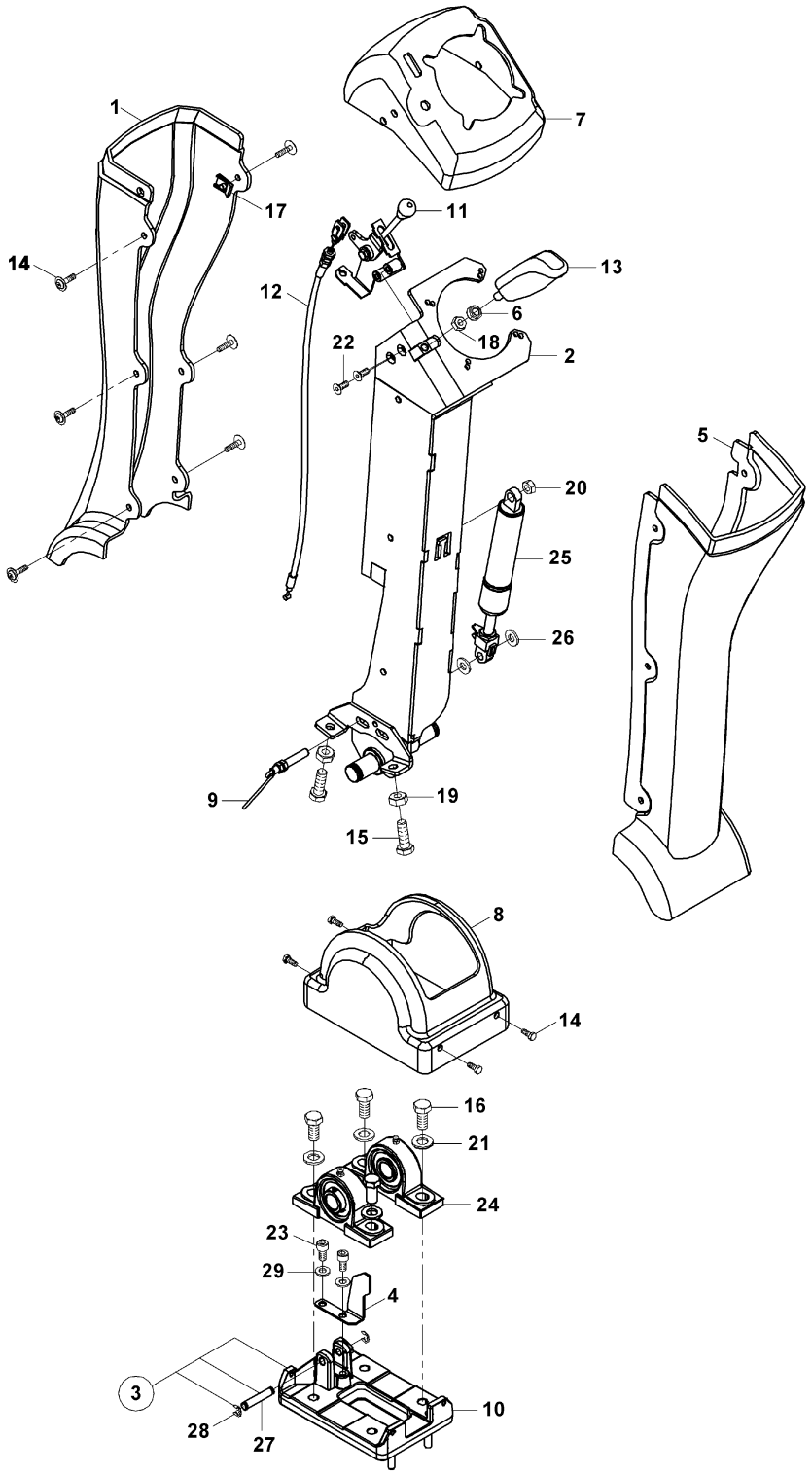

JOYSTİCK MEKANİZMASI, SAĞ
JOYSTICK MECHANISM, RH

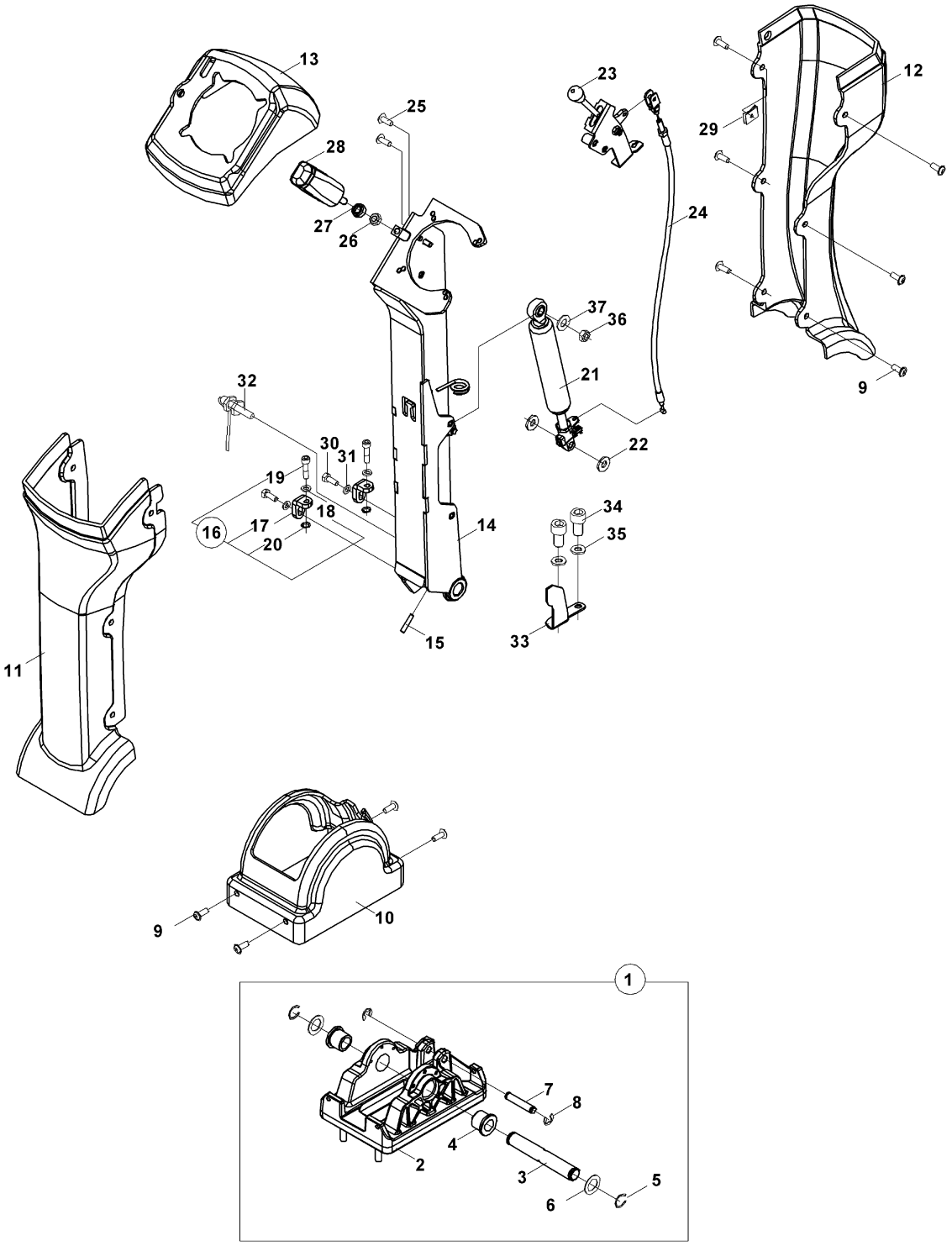

JOYSTİCK MEKANİZMASI, SOL
JOYSTICK MECHANISM, LH

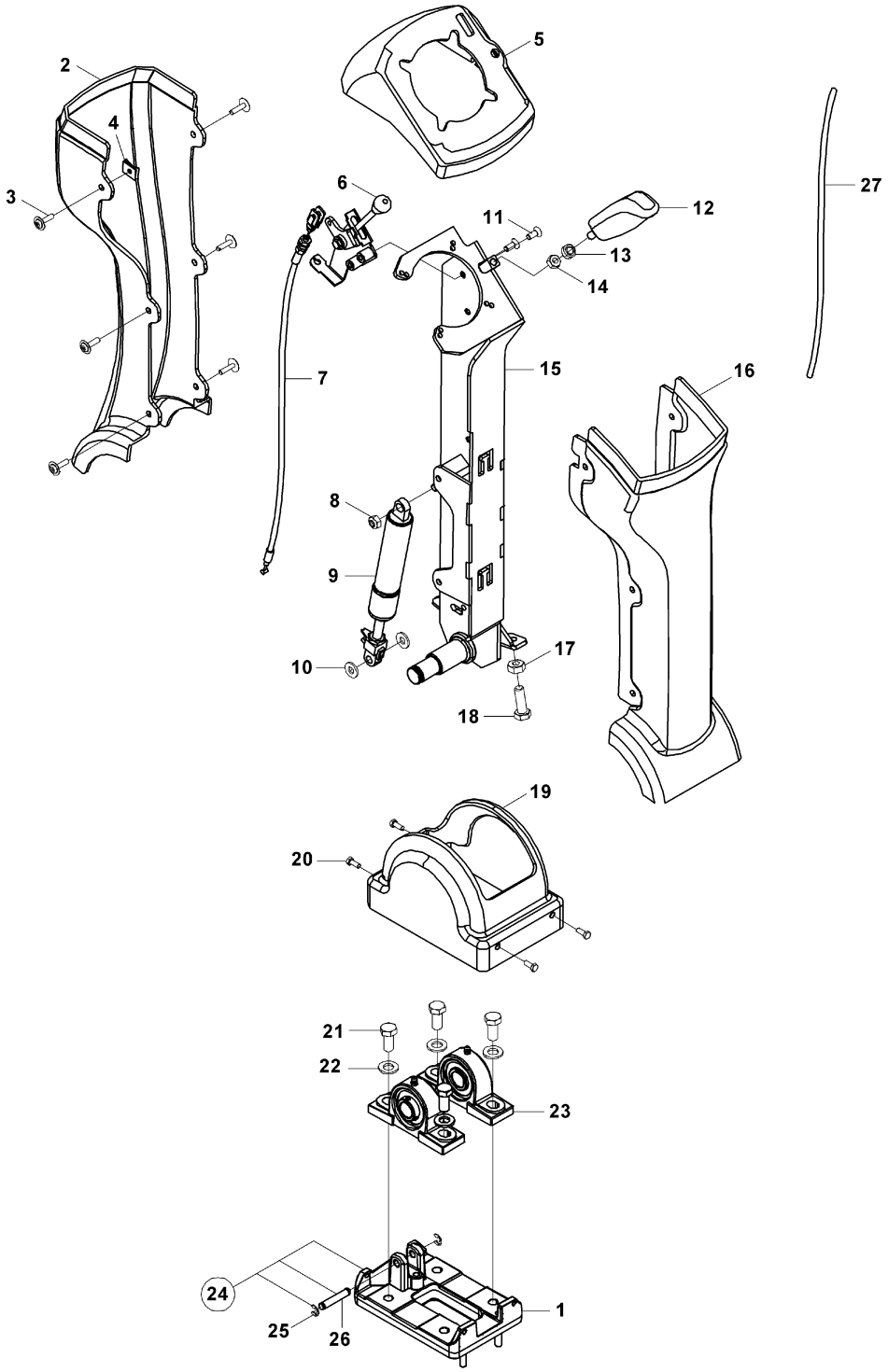

JOYSTİCK MEKANİZMASI, SOL
JOYSTICK MECHANISM, LH

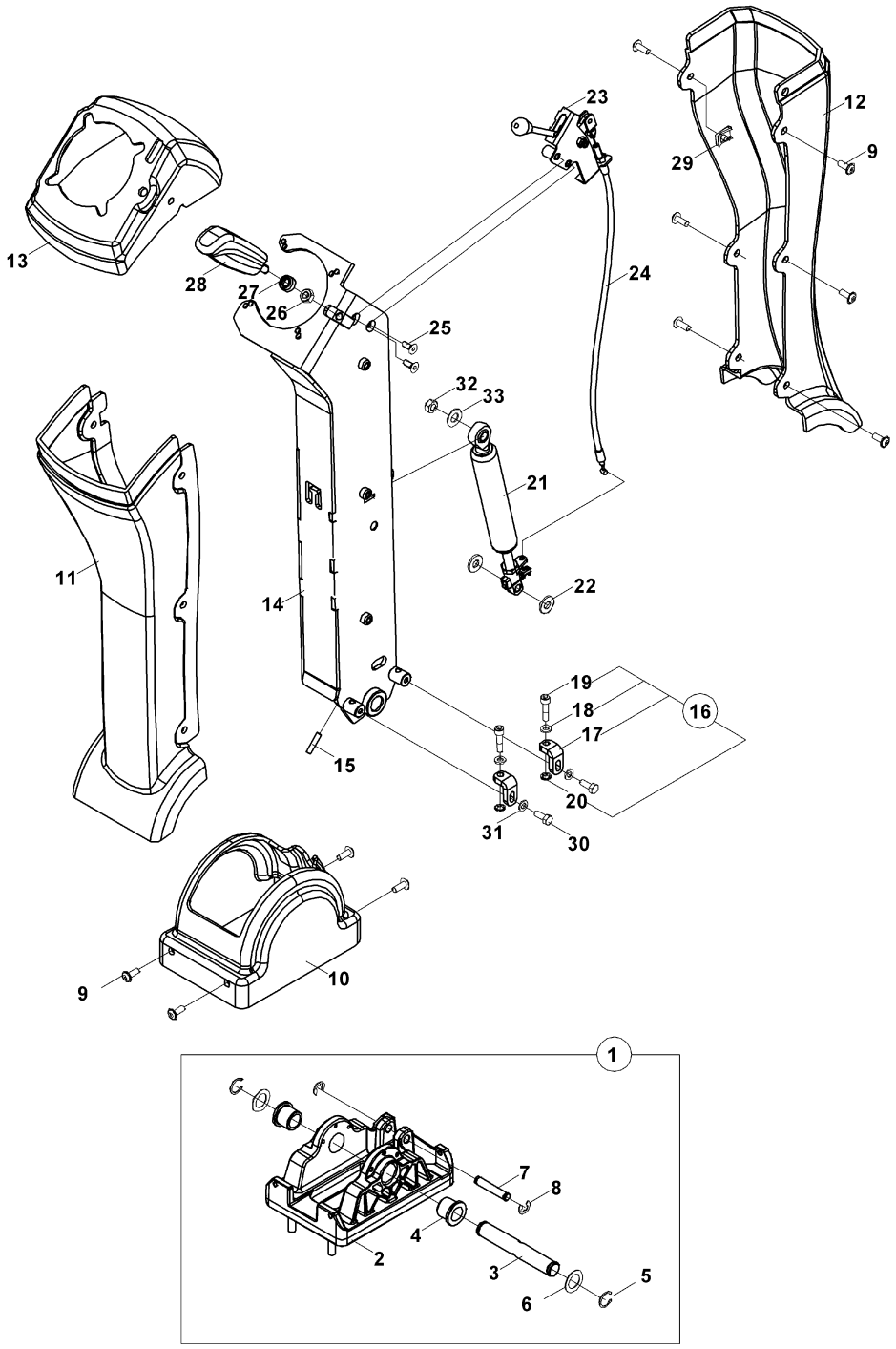

DİREKSİYON KOLONU KOMPLESİ
STEERING COLUMN ASSEMBLY

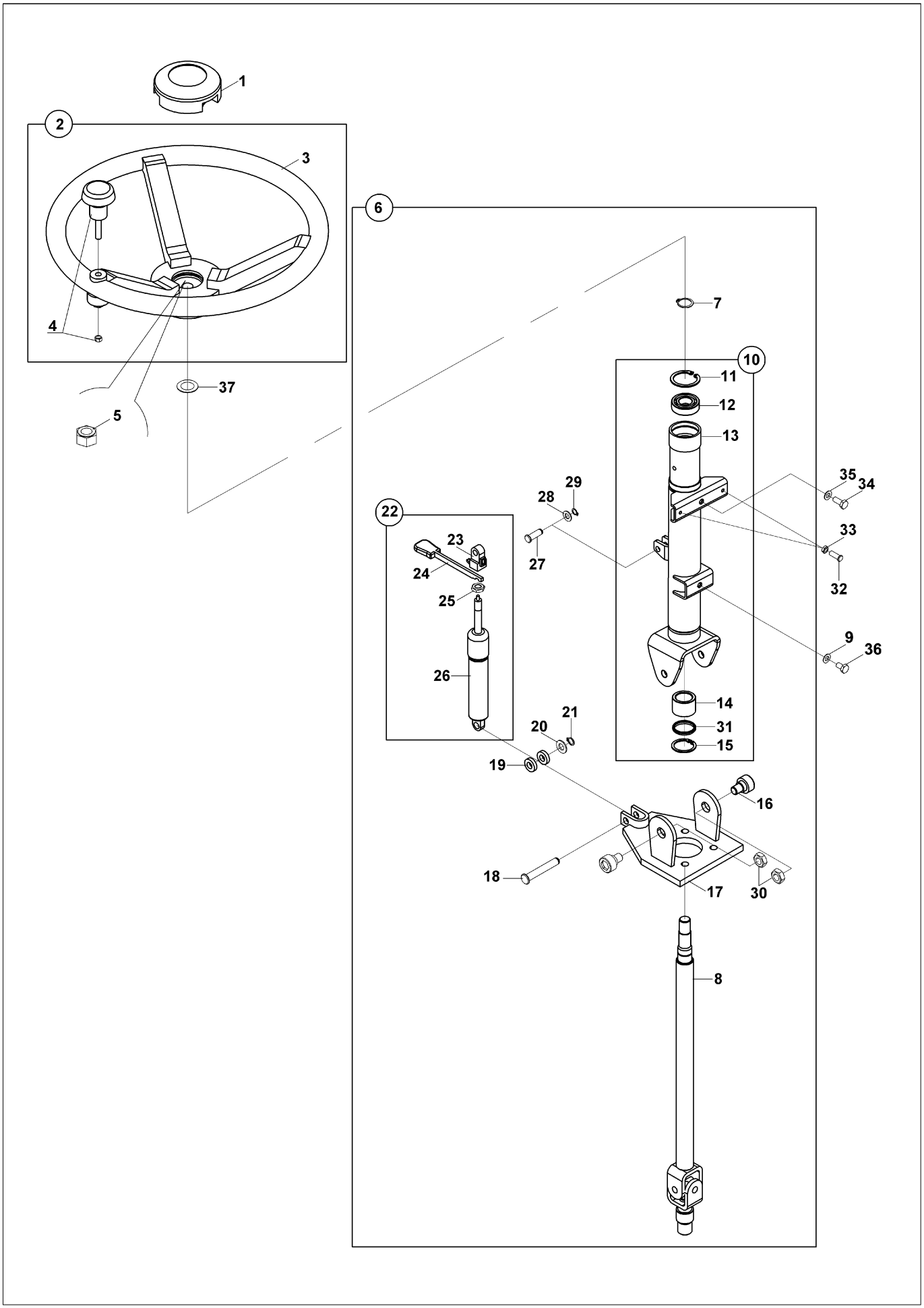

OPERATOR KOLTUK KOMPLESİ
OPERATOR SEAT ASSEMBLY

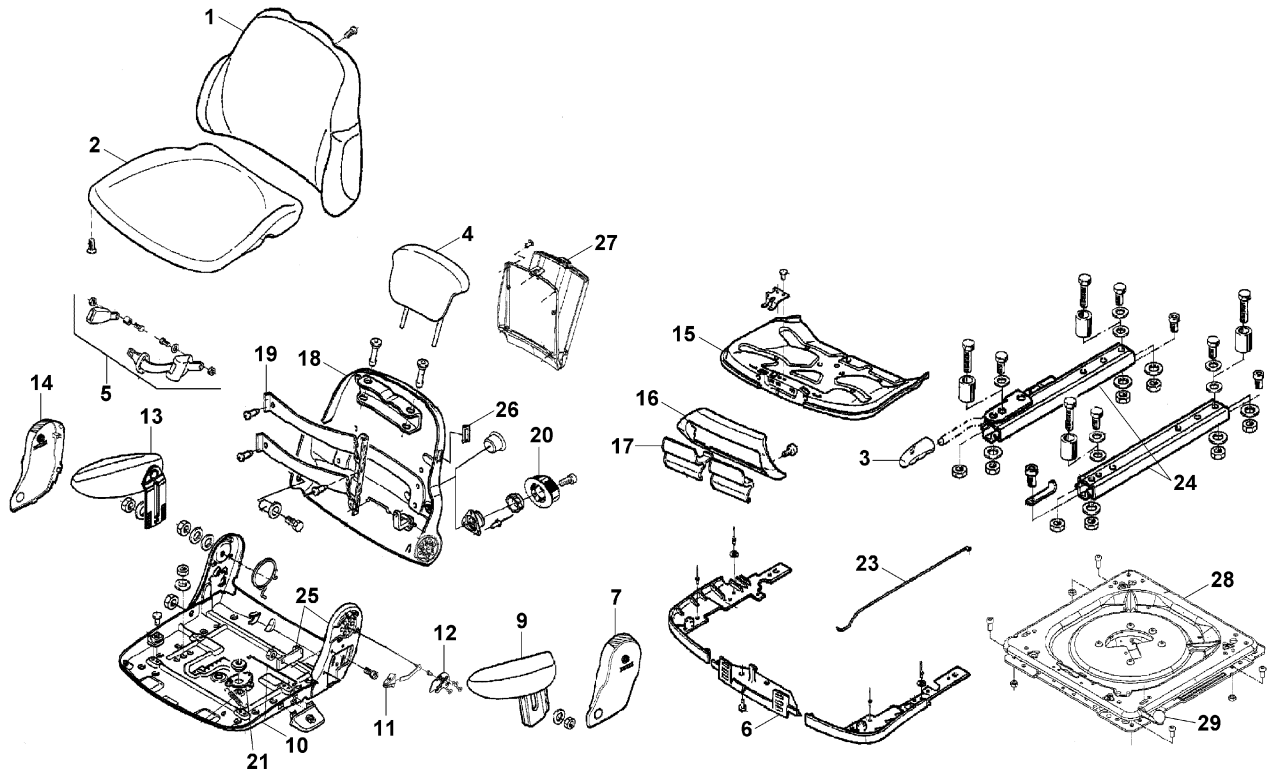

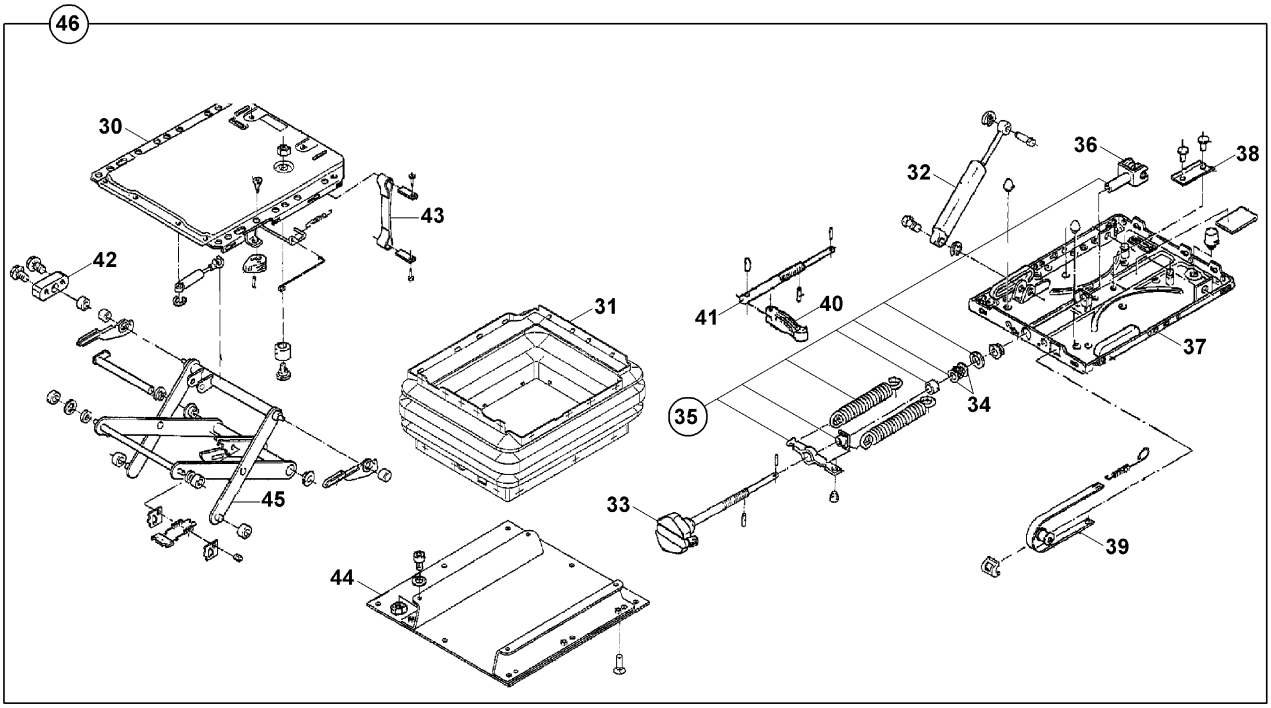

OPERATOR KOLTUK KOMPLESİ (HAVA SÜSPANSİYONLU)
OPERATOR SEAT ASSEMBLY (WITH AIR SUSPENSION)

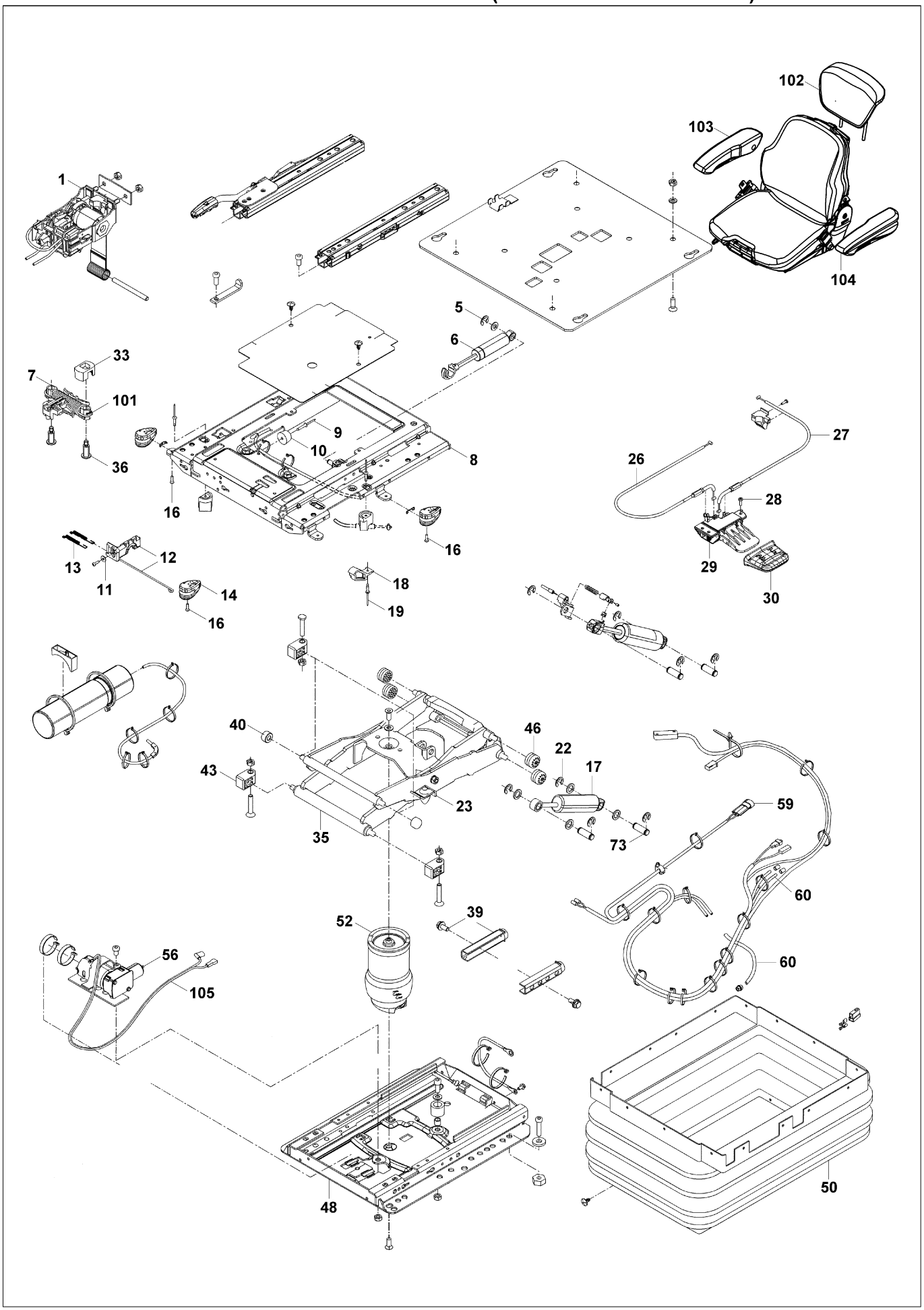

OPERATOR KOLTUK MONTAJI
OPERATOR SEAT MOUNTING

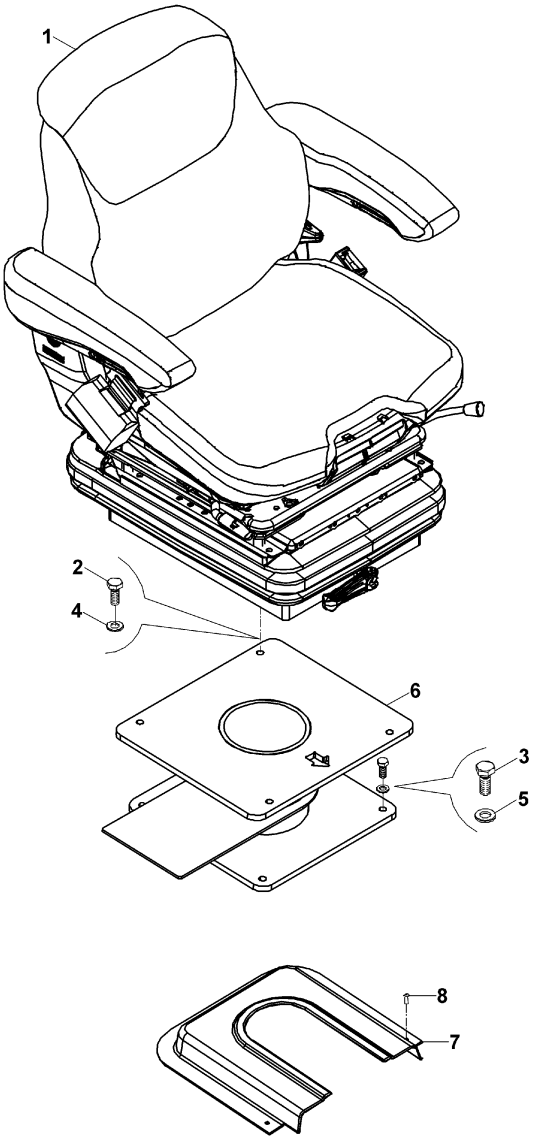

OPERATOR KOLTUK MONTAJI (HAVA SÜSPANSİYONLU)
OPERATOR SEAT MOUNTING (WITH AIR SUSPENSION

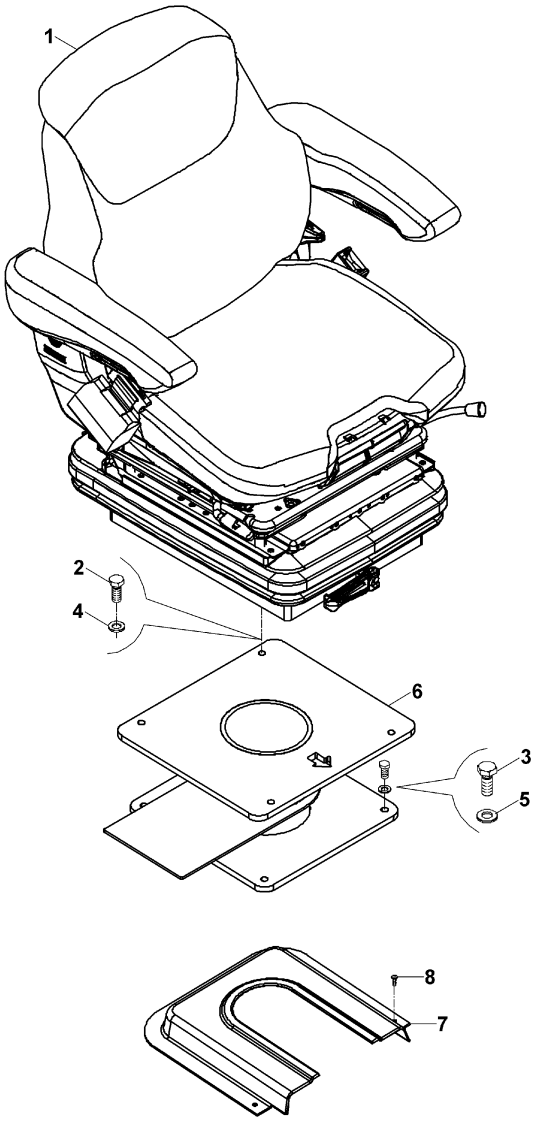

YÜKLEYİCİ KOL MONTAJI (1)
LOADER ARM MOUNTING (1)

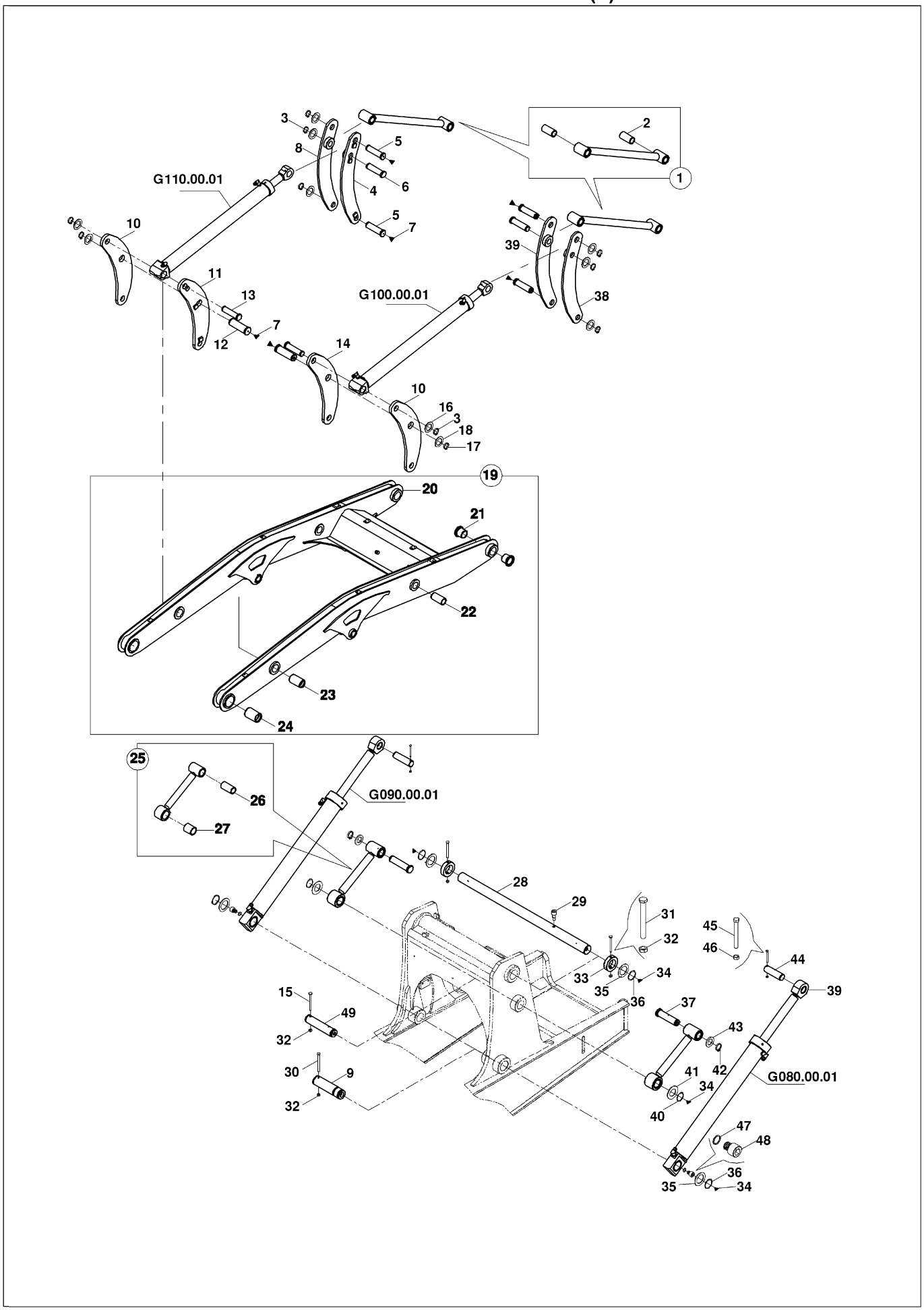

YÜKLEYİCİ KOL MONTAJI (1)
LOADER ARM MOUNTING (1)

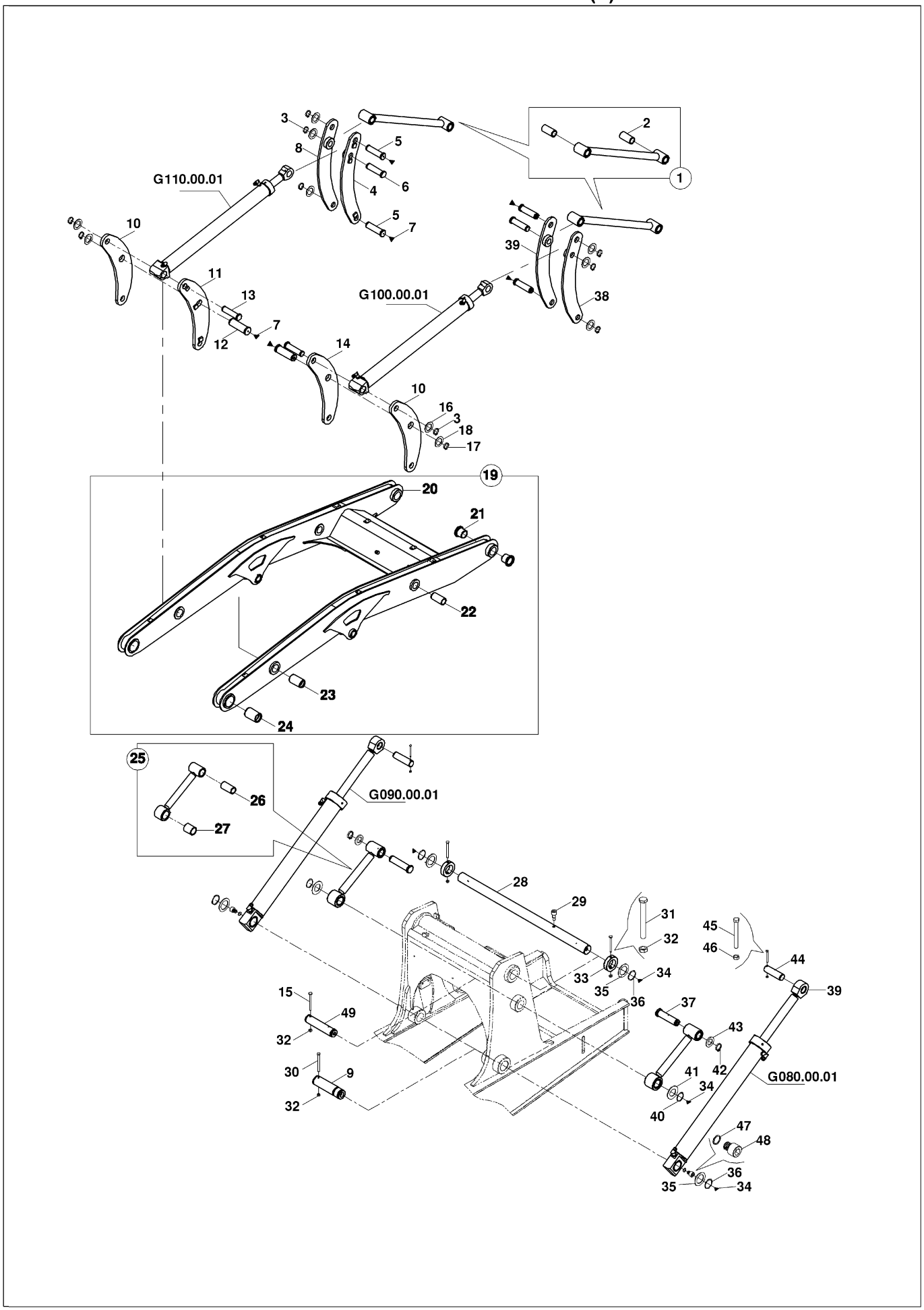

YÜKLEYİCİ KOL MONTAJI (2)
LOADER ARM MOUNTING (2)

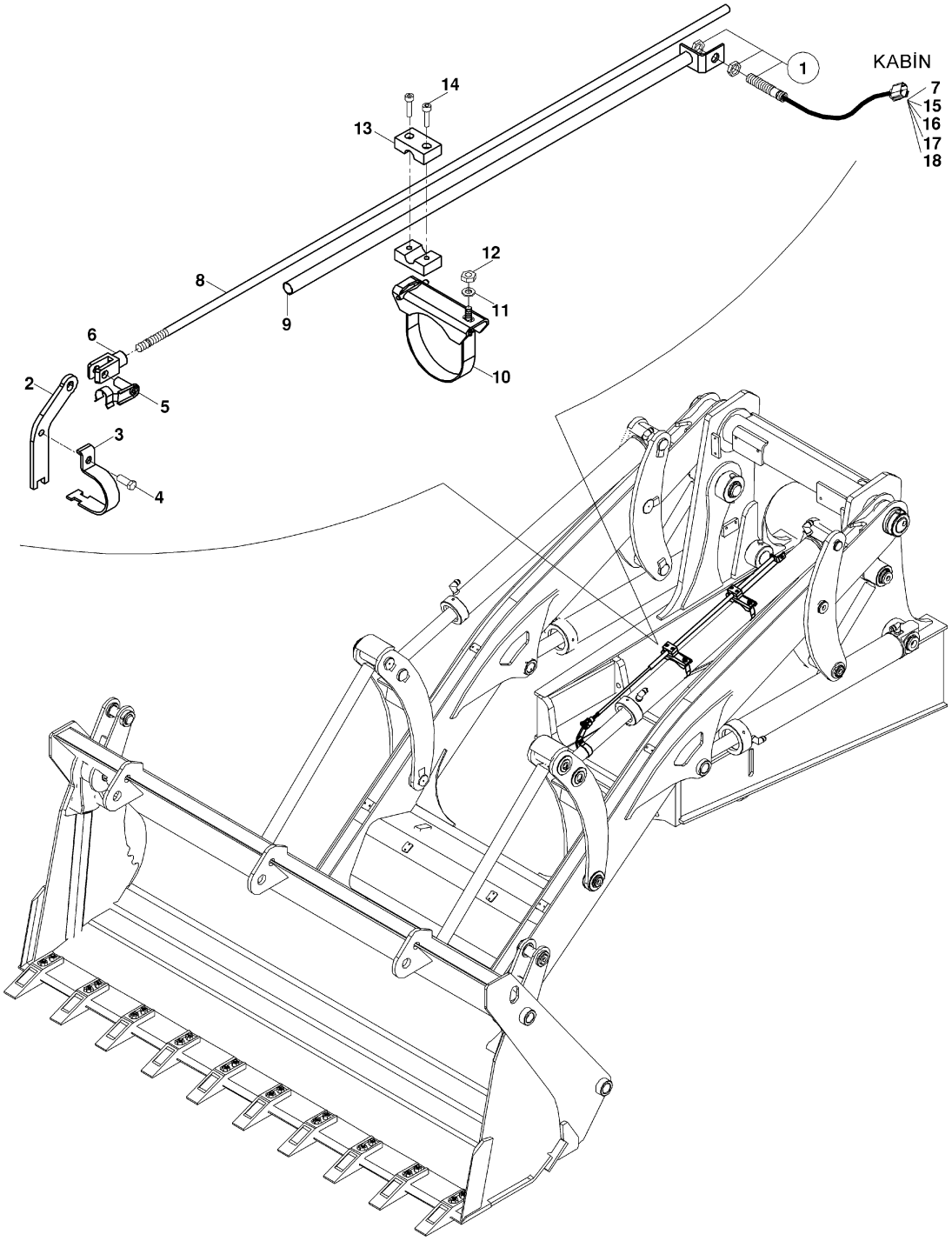

YÜKLEYİCİ KOL MONTAJI (3)
LOADER ARM MOUNTING (3)

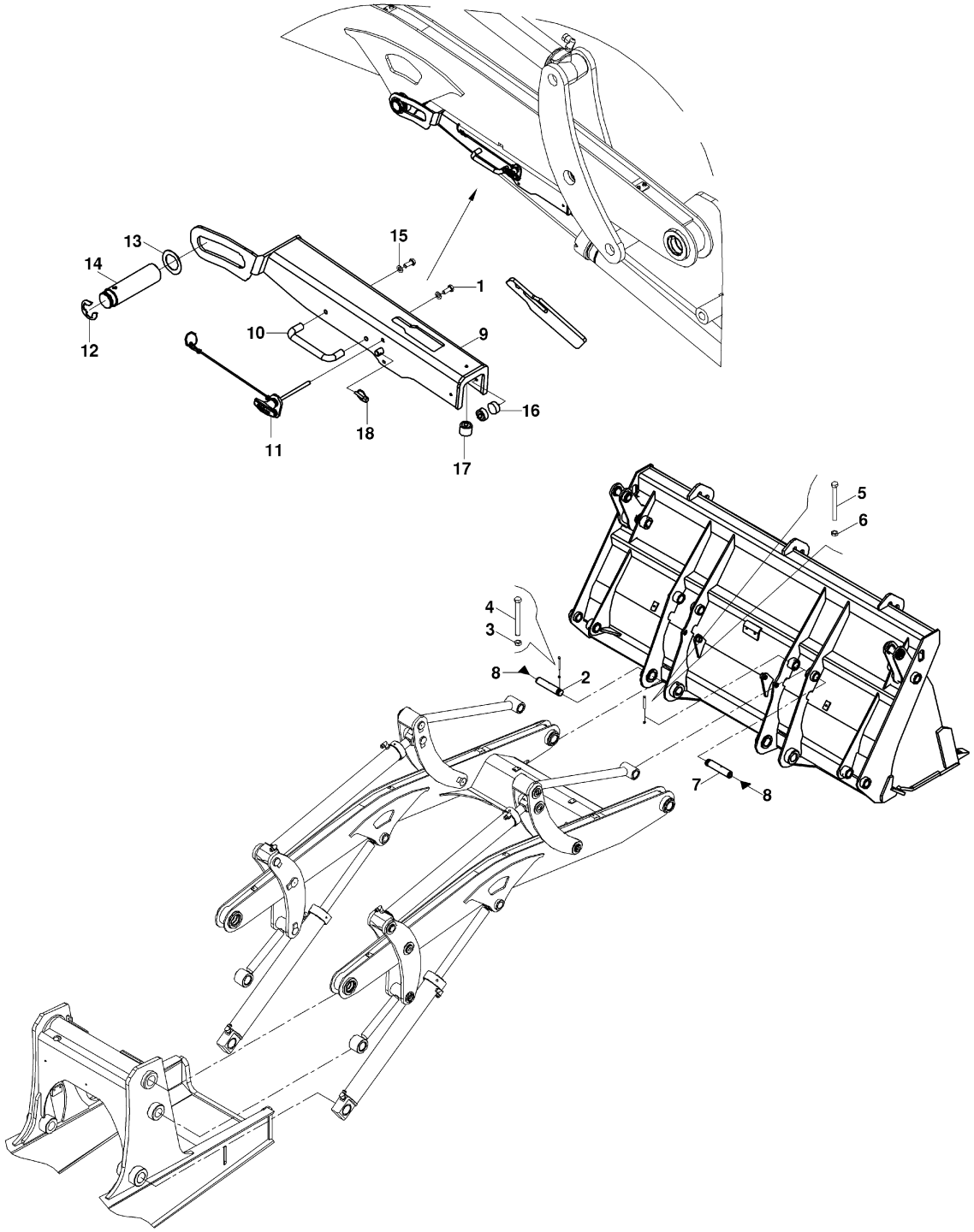

AÇILIR KEPÇE (1.1 m3)
MULTIPURPOSE BUCKET, LOADER (1.1 m3)

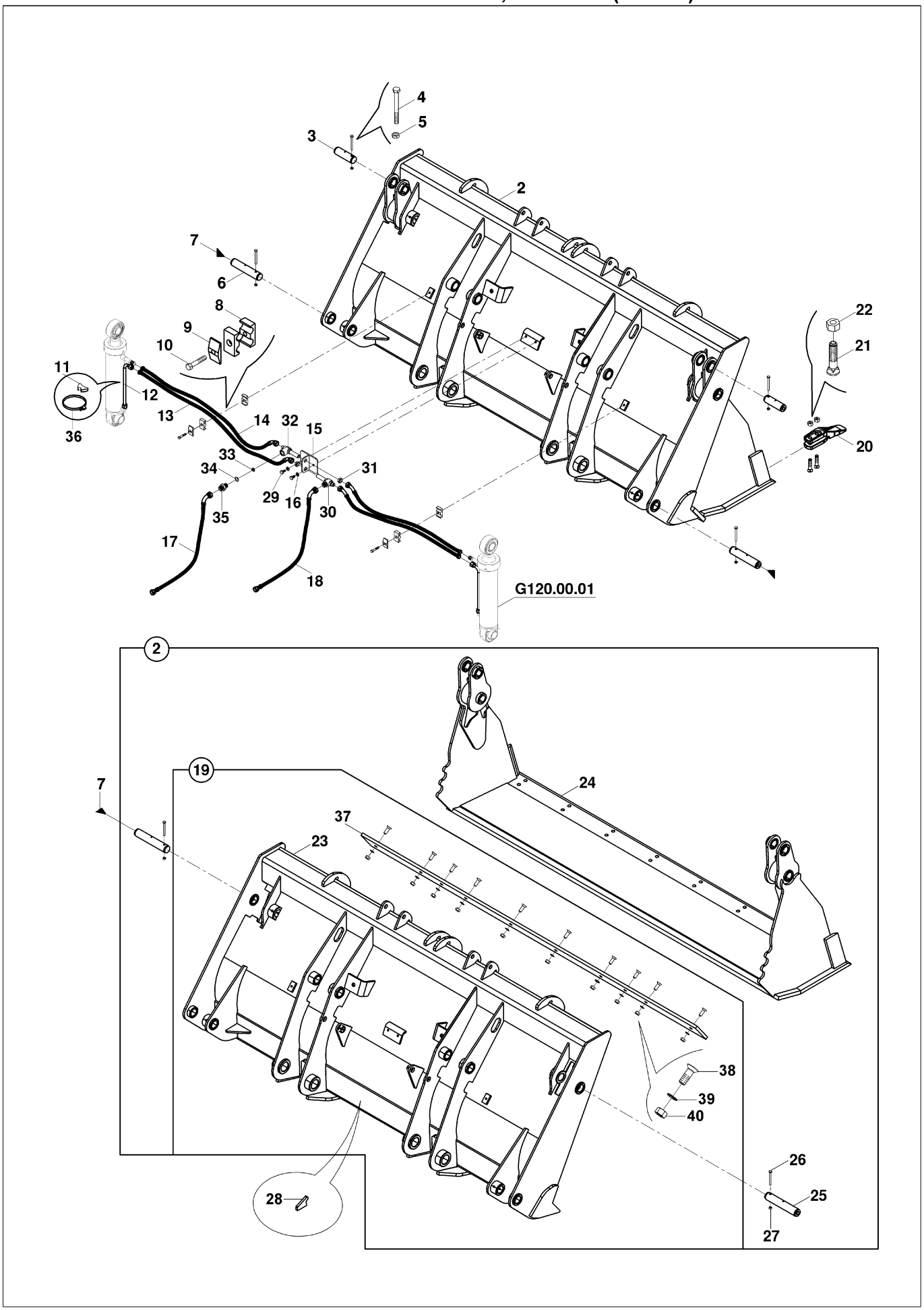

AÇILIR KEPÇE (1,3 m3)
MULTIPORPUSE BUCKET, LOADER (1,3 m3)

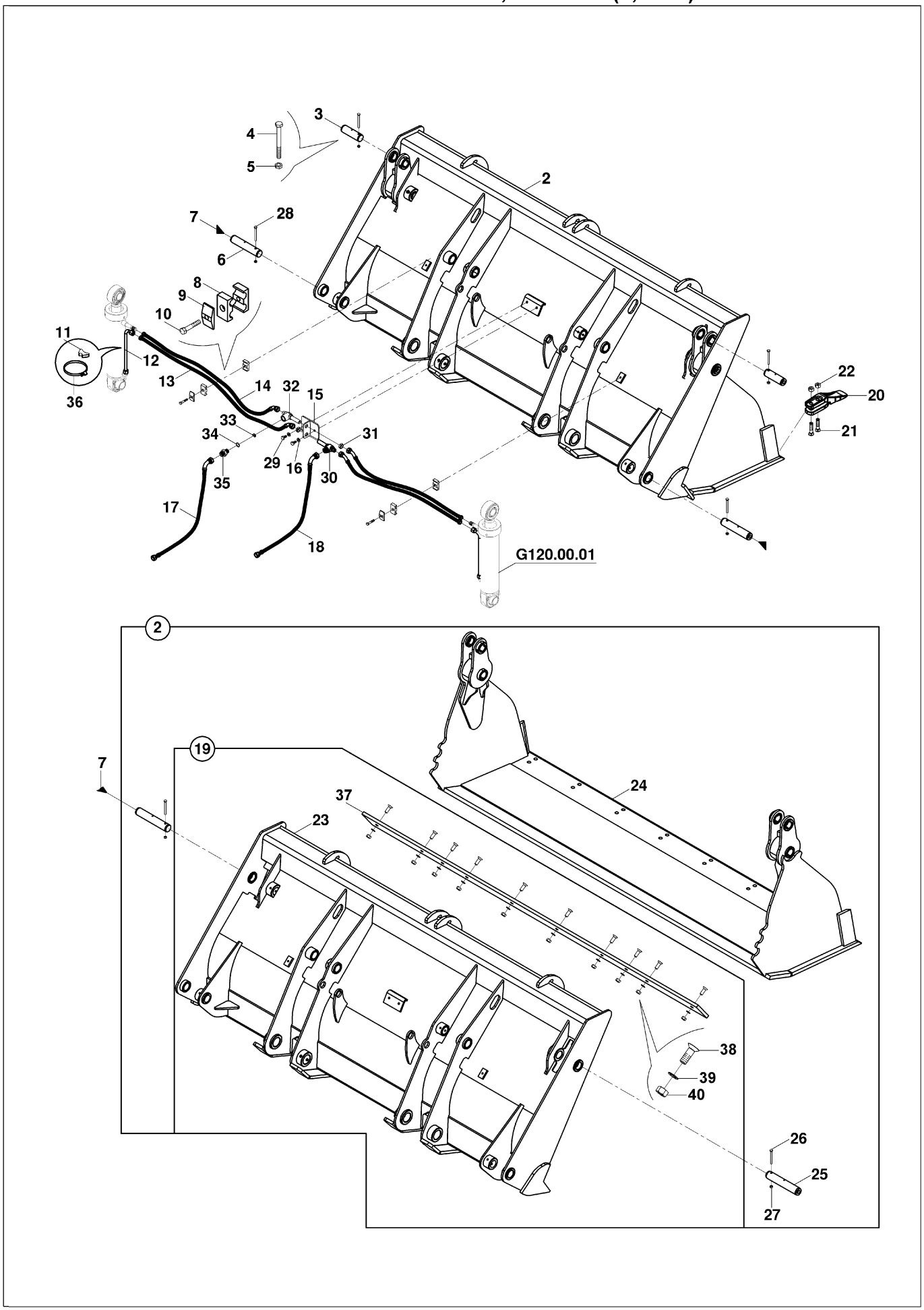

AÇILIR KEPÇE (ÇABUK SÖK TAKLI)
MULTIPURPOSE BUCKET, LOADER (WITH QUICK COUPLER

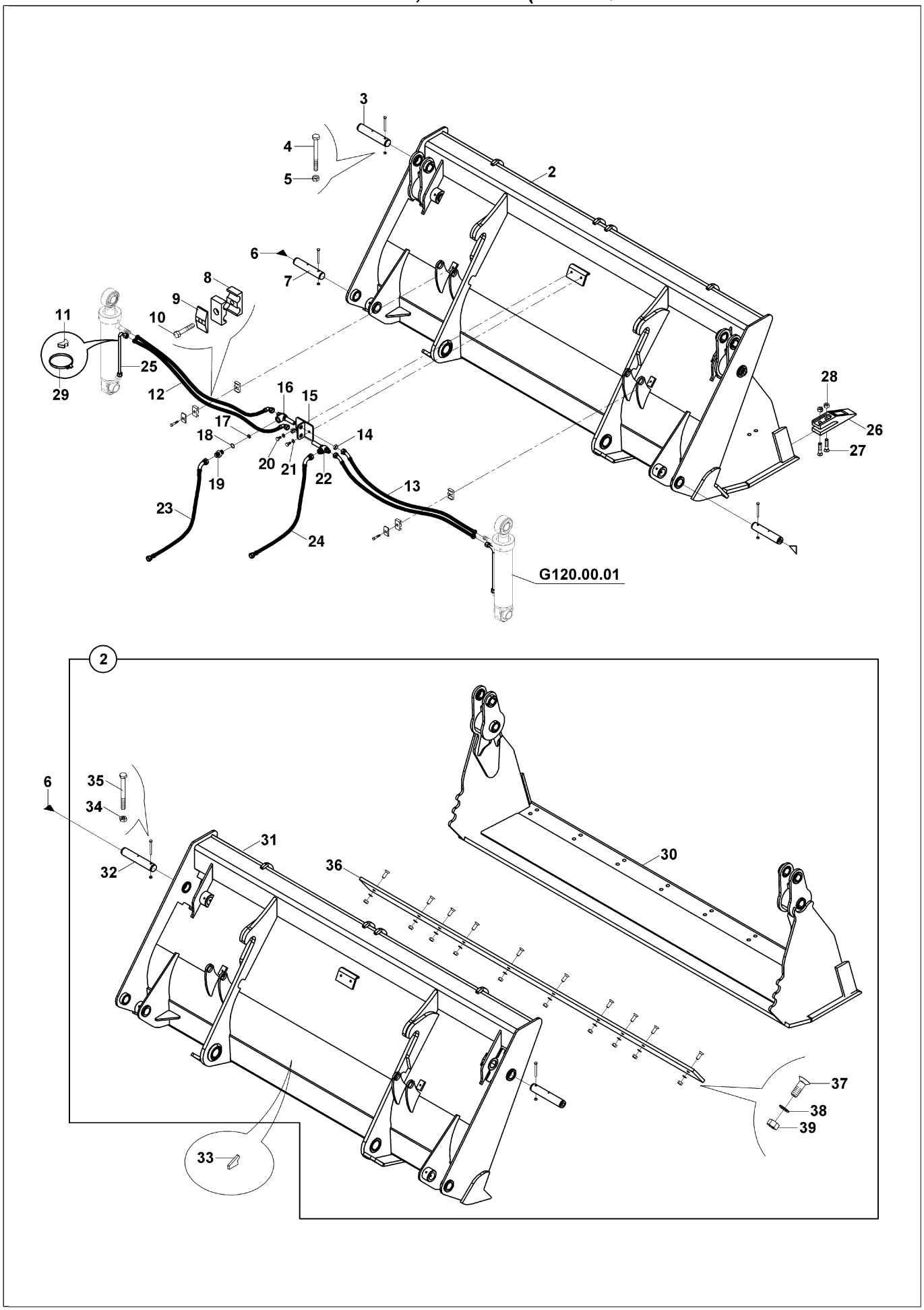

SABİT KEPÇE (1.2 m3)
SHOVEL (1.2 m3)

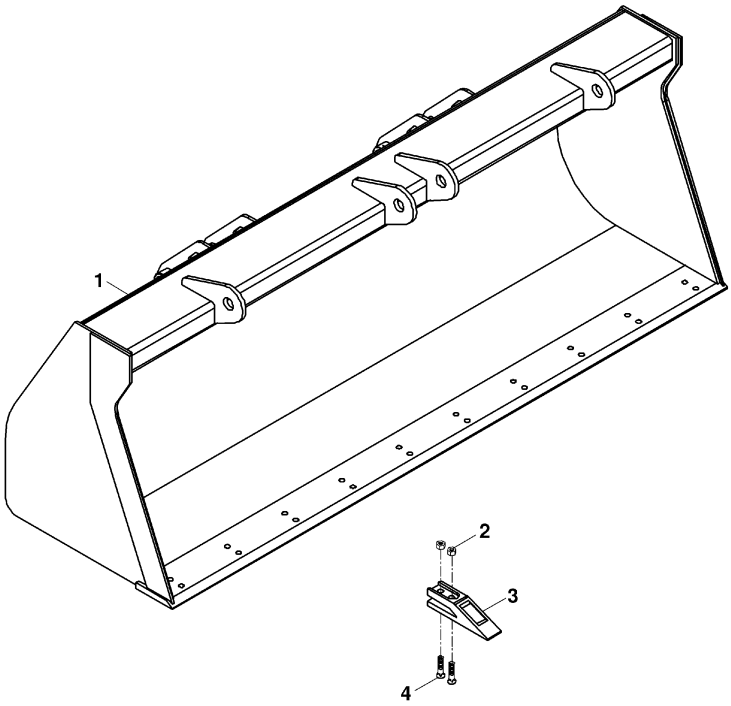

SABİT KEPÇE (1,5 m3)
SHOVEL (1,5 m3)

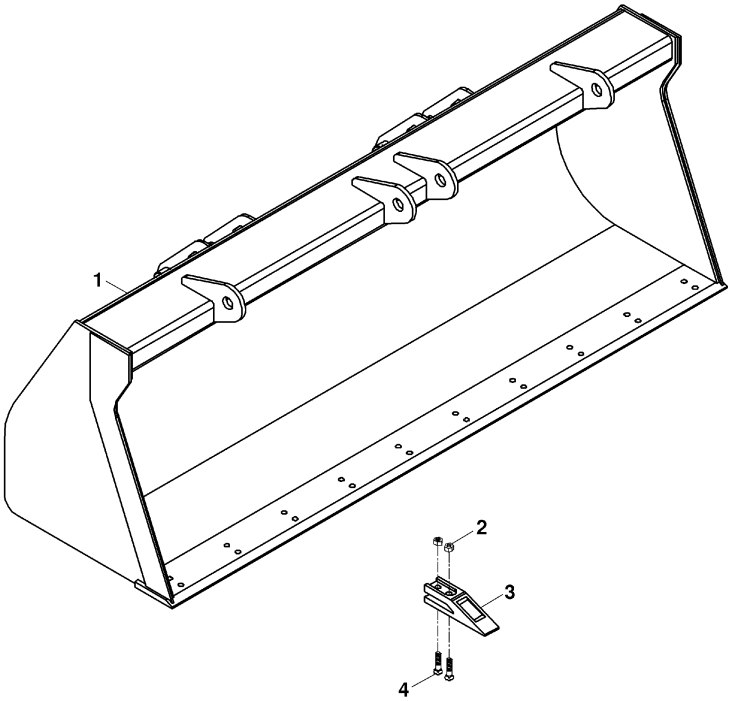

TESVİYE KÜREĞİ (716x2800)
LEVELLING, BLADE (716x2800)

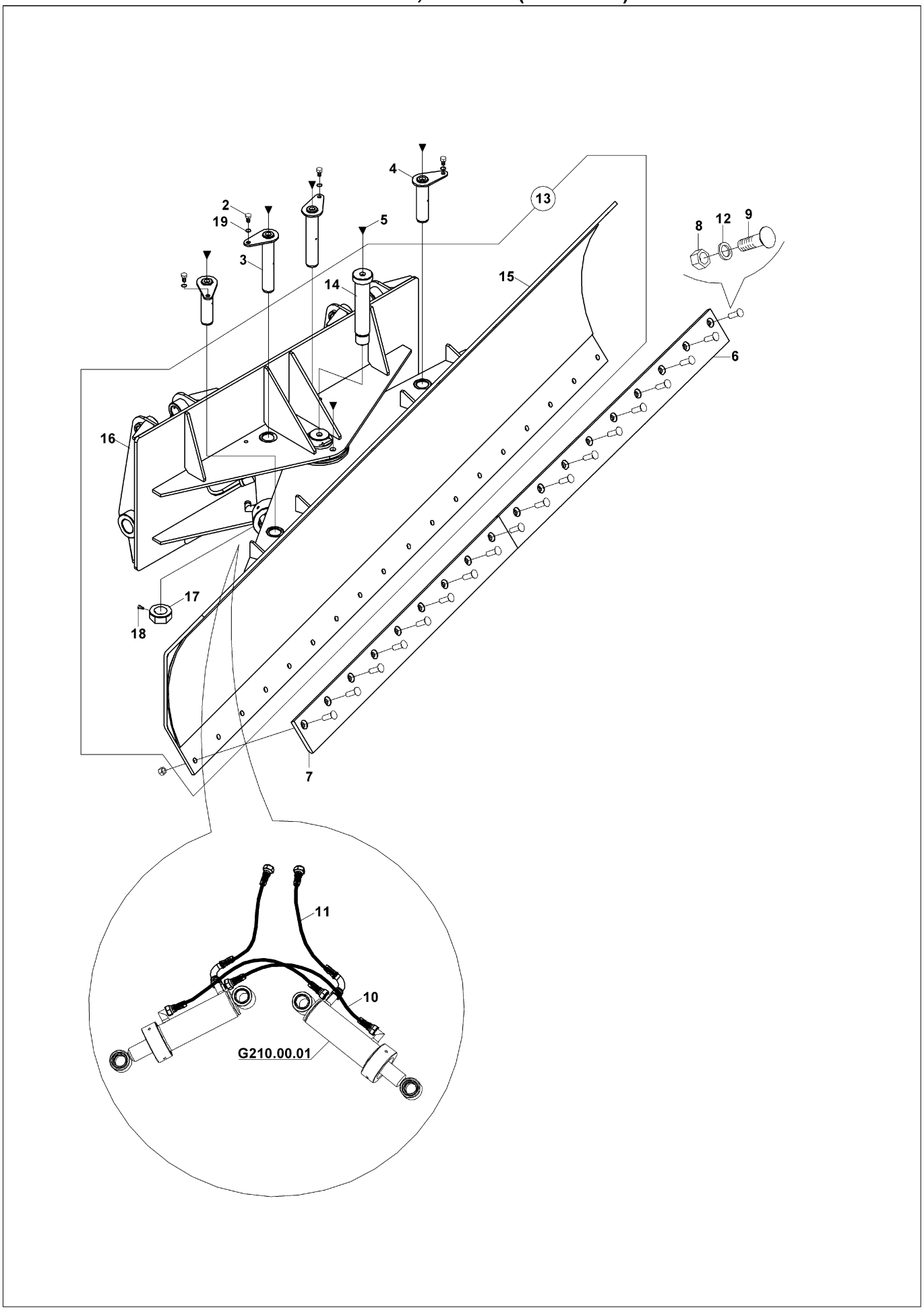

TESVİYE KÜREĞİ (900x2800)
LEVELLING, BLADE (900x2800)

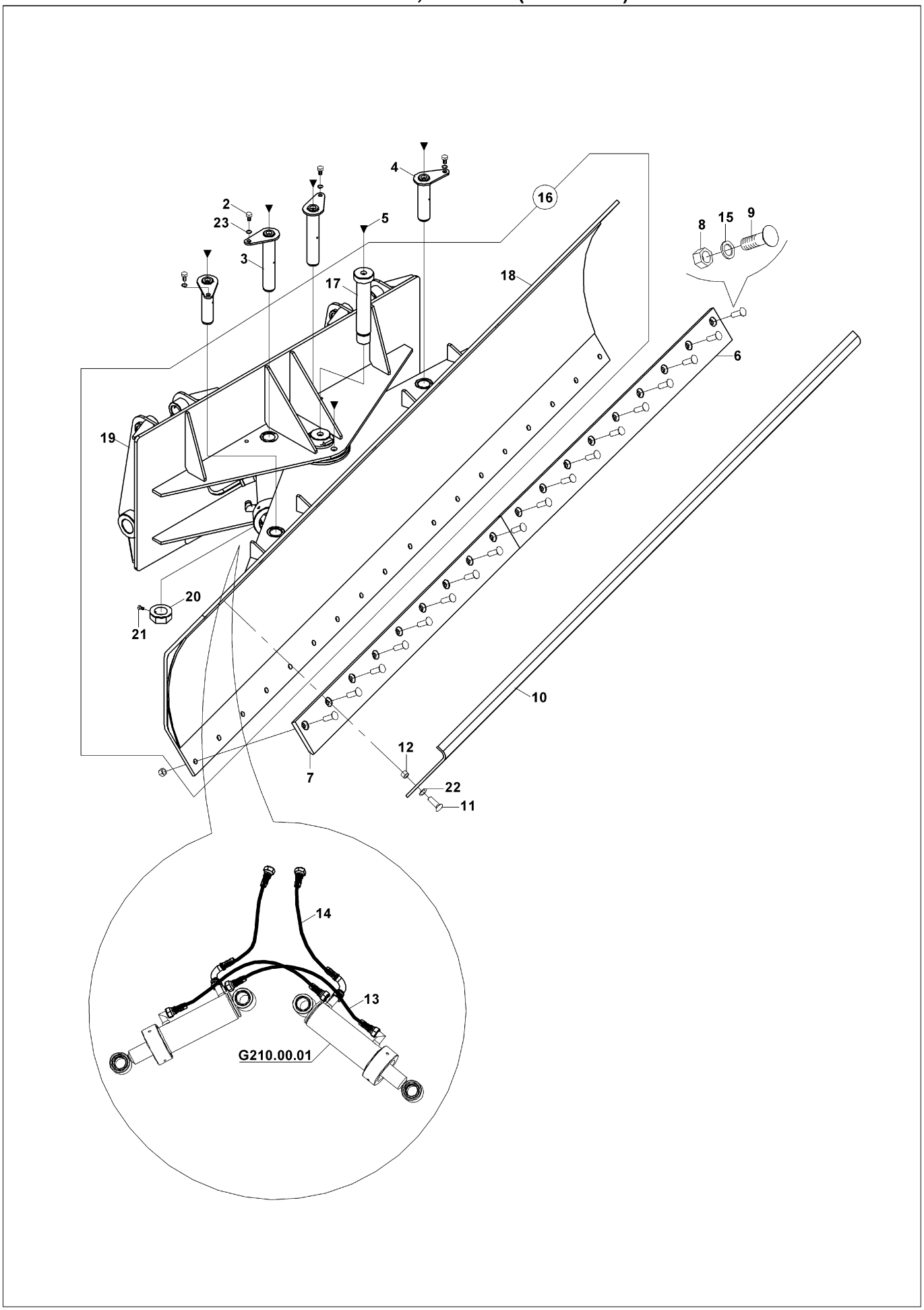

TESVİYE KÜREĞİ (ÇABUK SÖK TAKLI 716x2800)
LEVELLING BLADE (WITH QUICK COUPLER 716x2800)

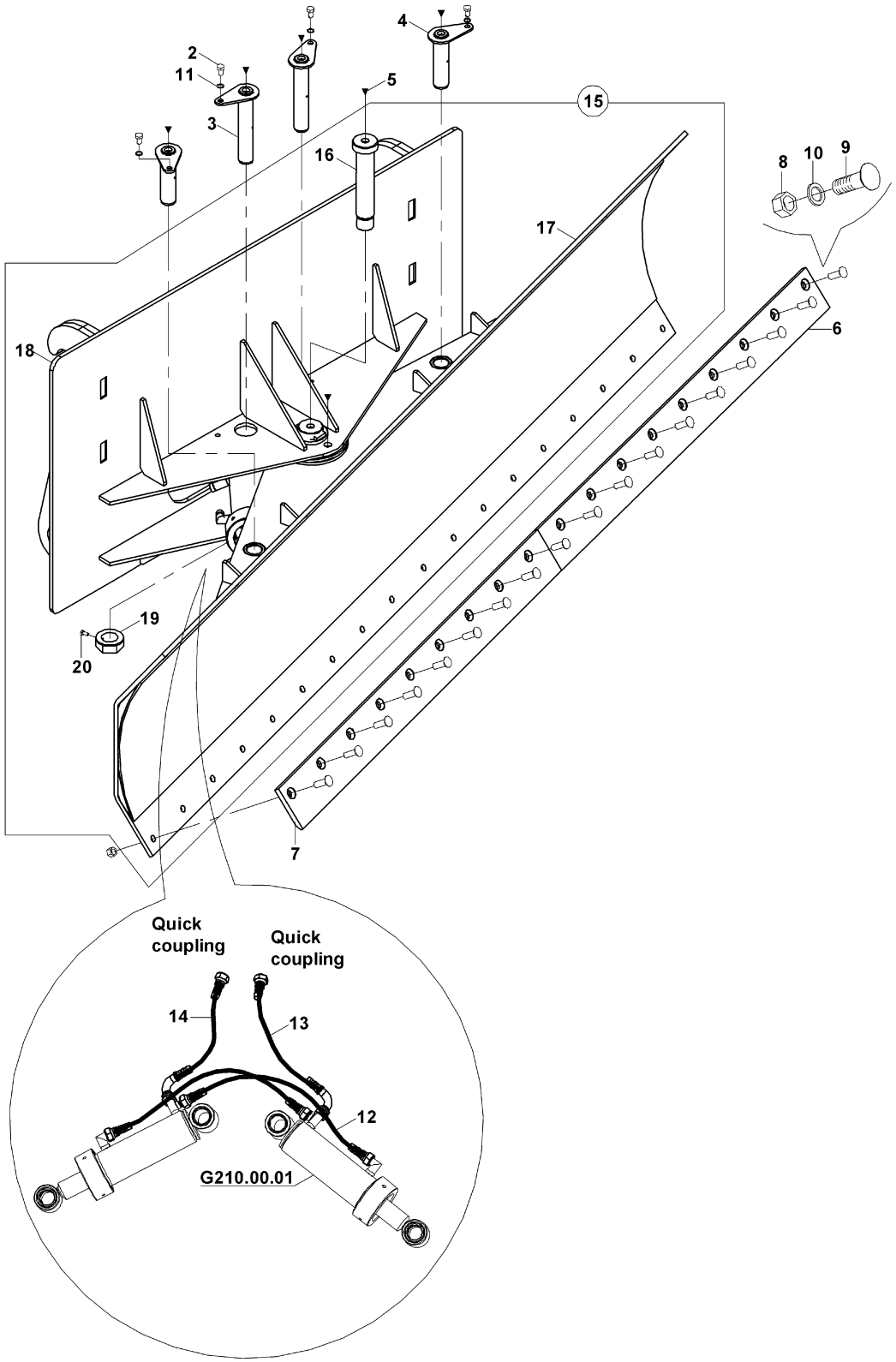

TESVİYE KÜREĞİ (ÇABUK SÖK TAKLI 900x2800)
LEVELLING BLADE (WITH QUICK COUPLER 900x2800)

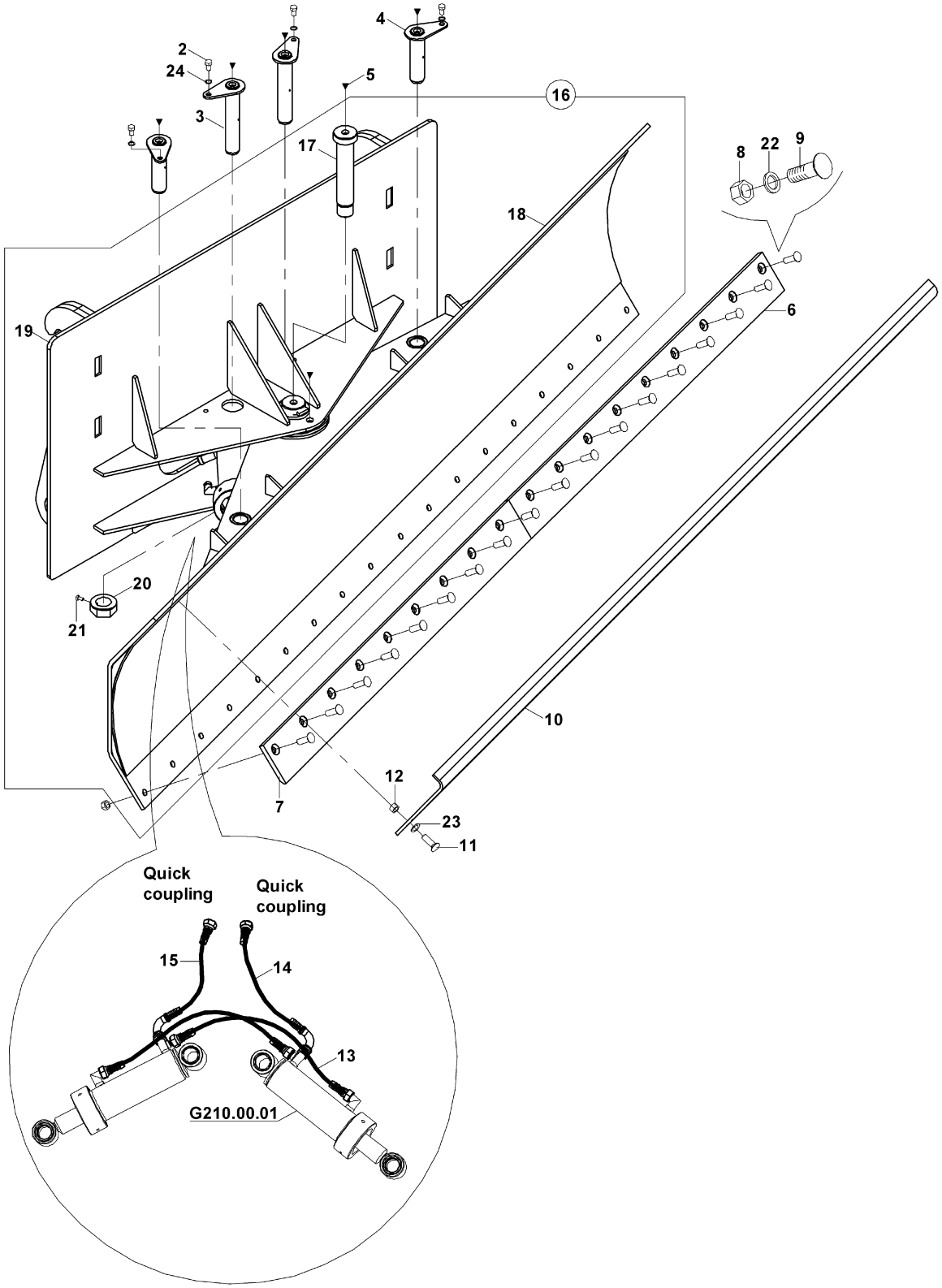

TESVİYE KÜREĞİ, ÇİFT EKSENLİ
LEVELLING BLADE, DOUBLE AXIS

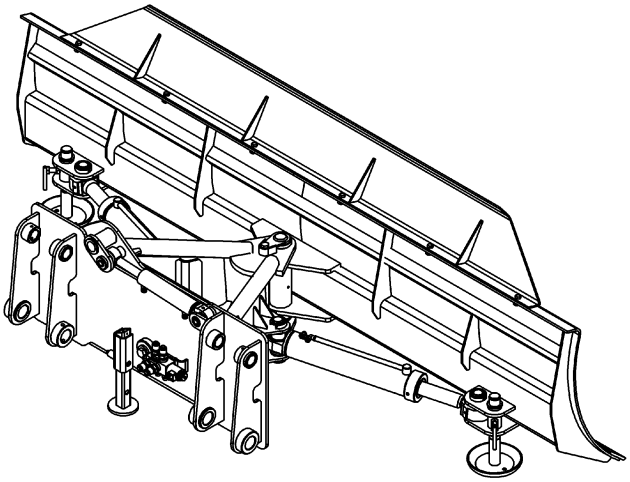

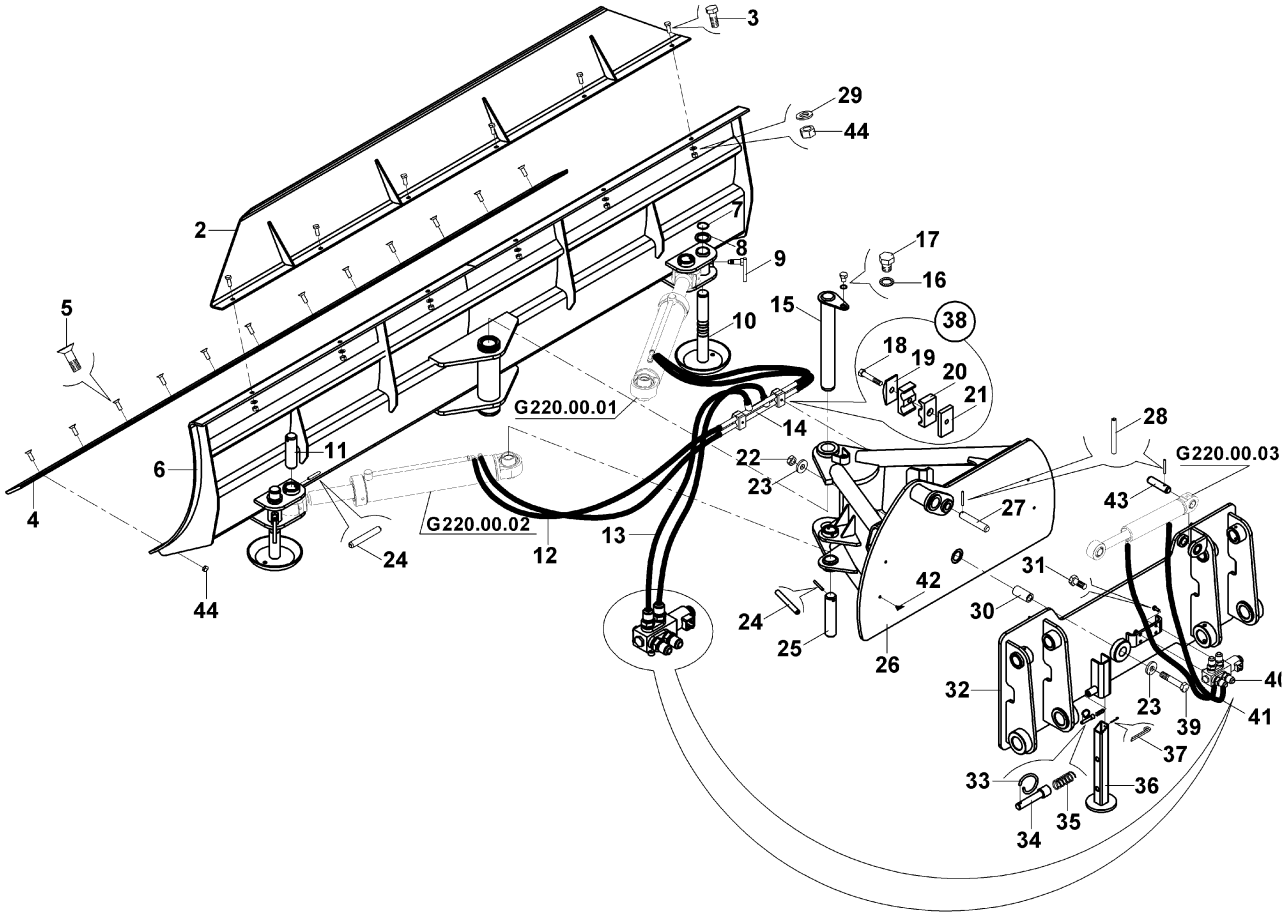

TOMRUK YÜKLEYİCİ, (2+1 TIRNAKLI)
LOG GRAPPLE, (2+1 CLAMP)

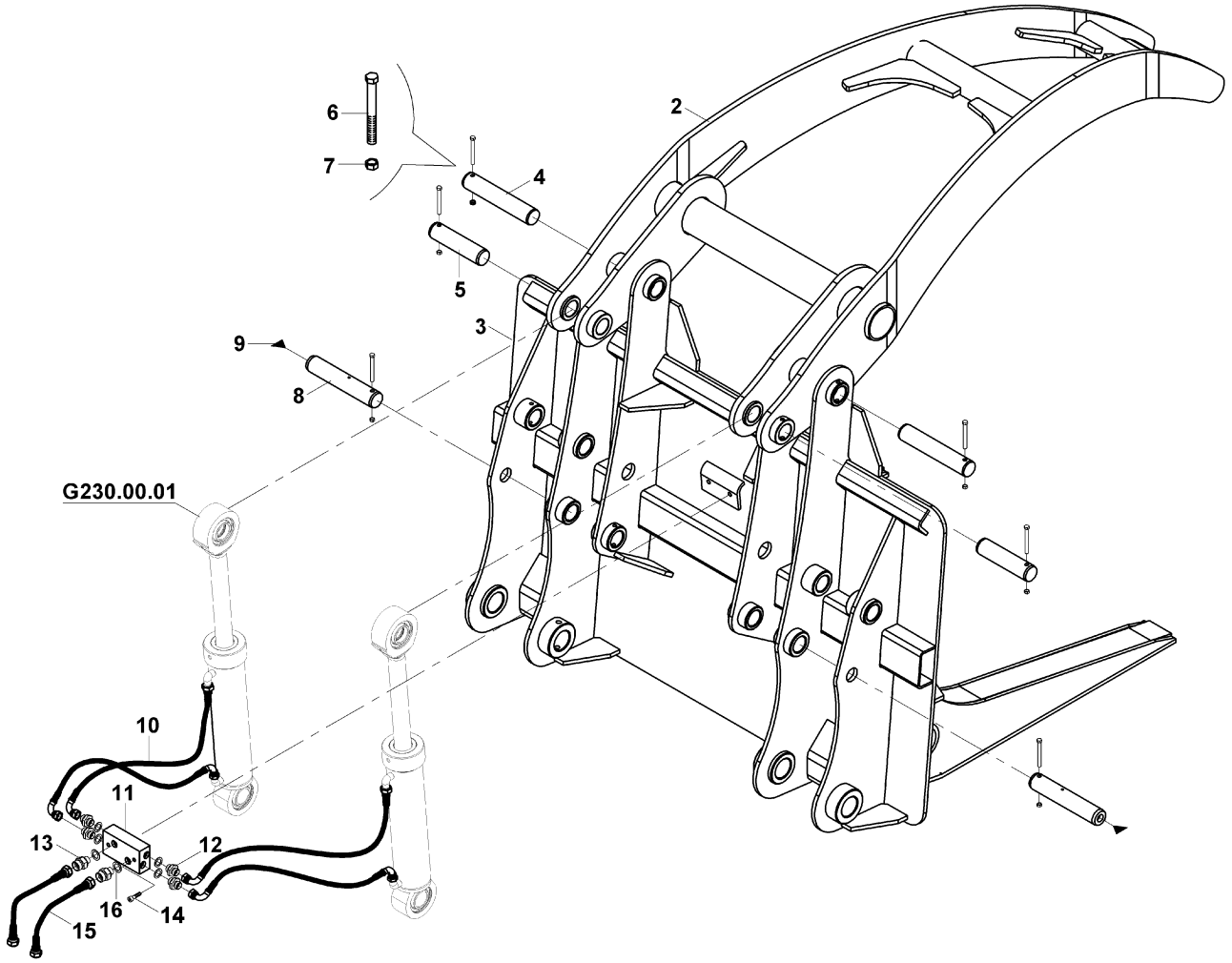

TOMRUK YÜKLEYİCİ, (HAREKETLİ, Ø200mm)
LOG GRAPPLE, (WITH VERTICAL MOVEMENT Ø200mm)

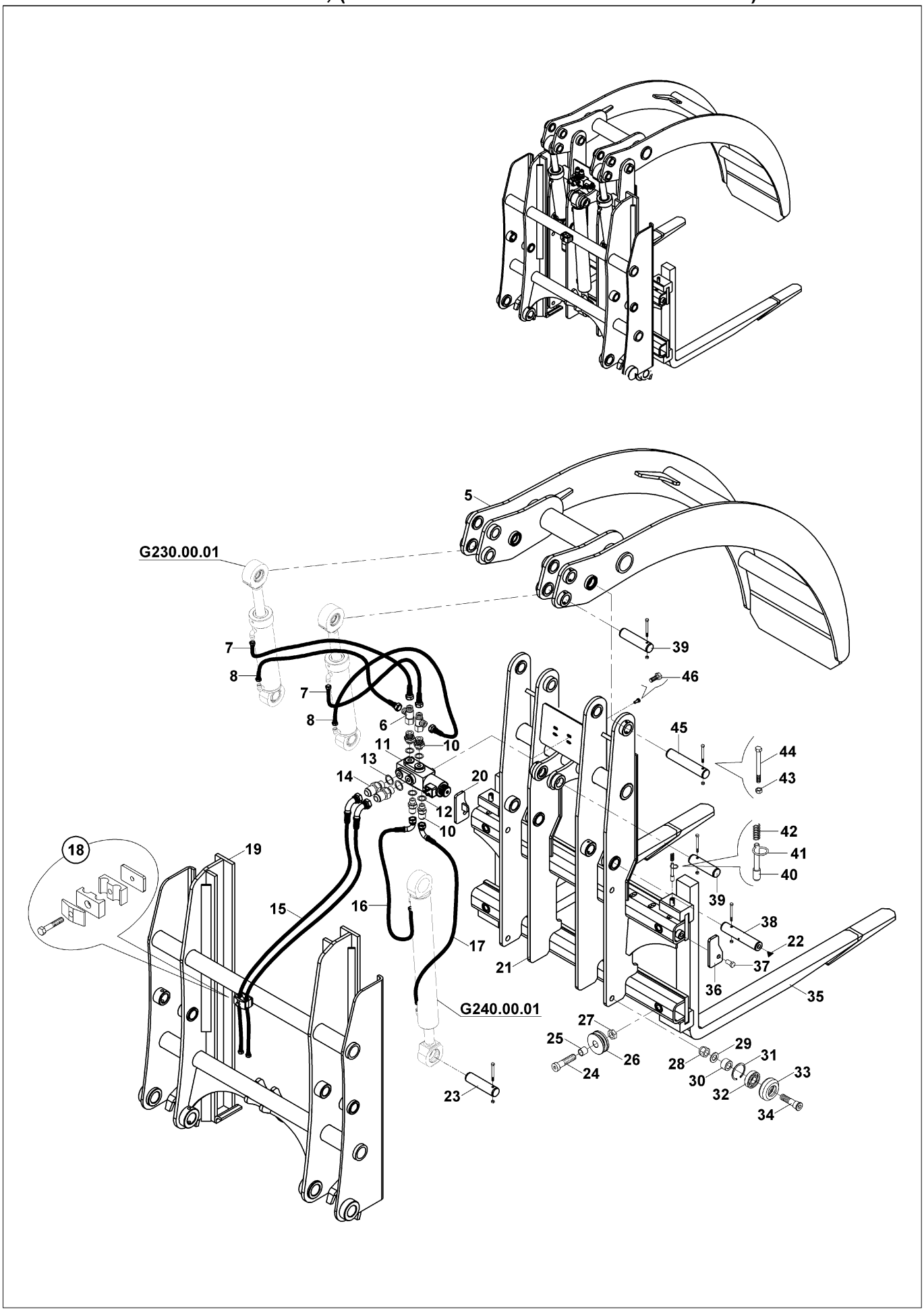

TOMRUK YÜKLEYİCİ, (HAREKETLİ, Ø500mm)
LOG GRAPPLE, (WITH VERTICAL MOVEMENT Ø500mm)

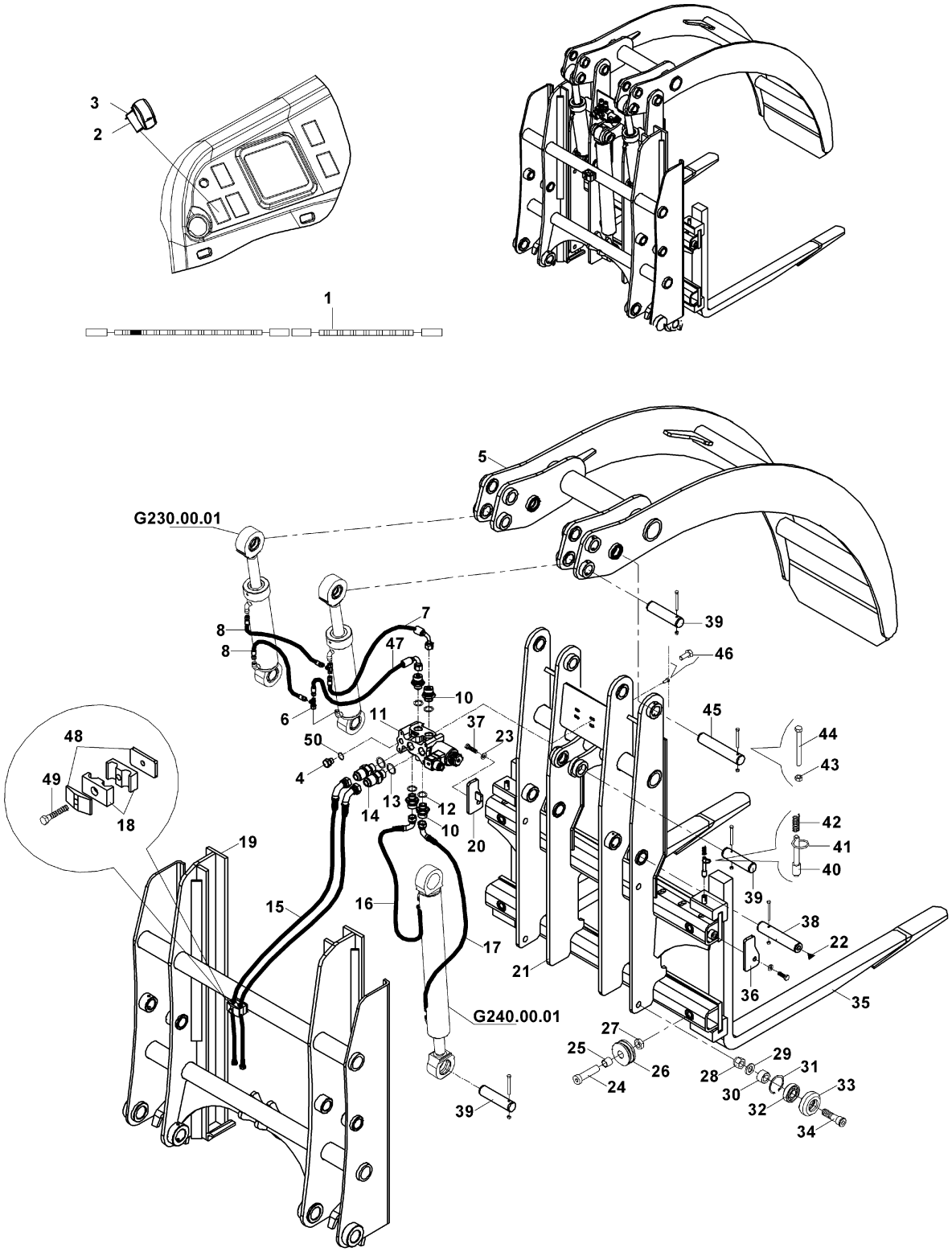

TOMRUK YÜKLEYİCİ, (HAREKETLİ, Ø500mm)
LOG GRAPPLE, (WITH VERTICAL MOVEMENT Ø500mm)

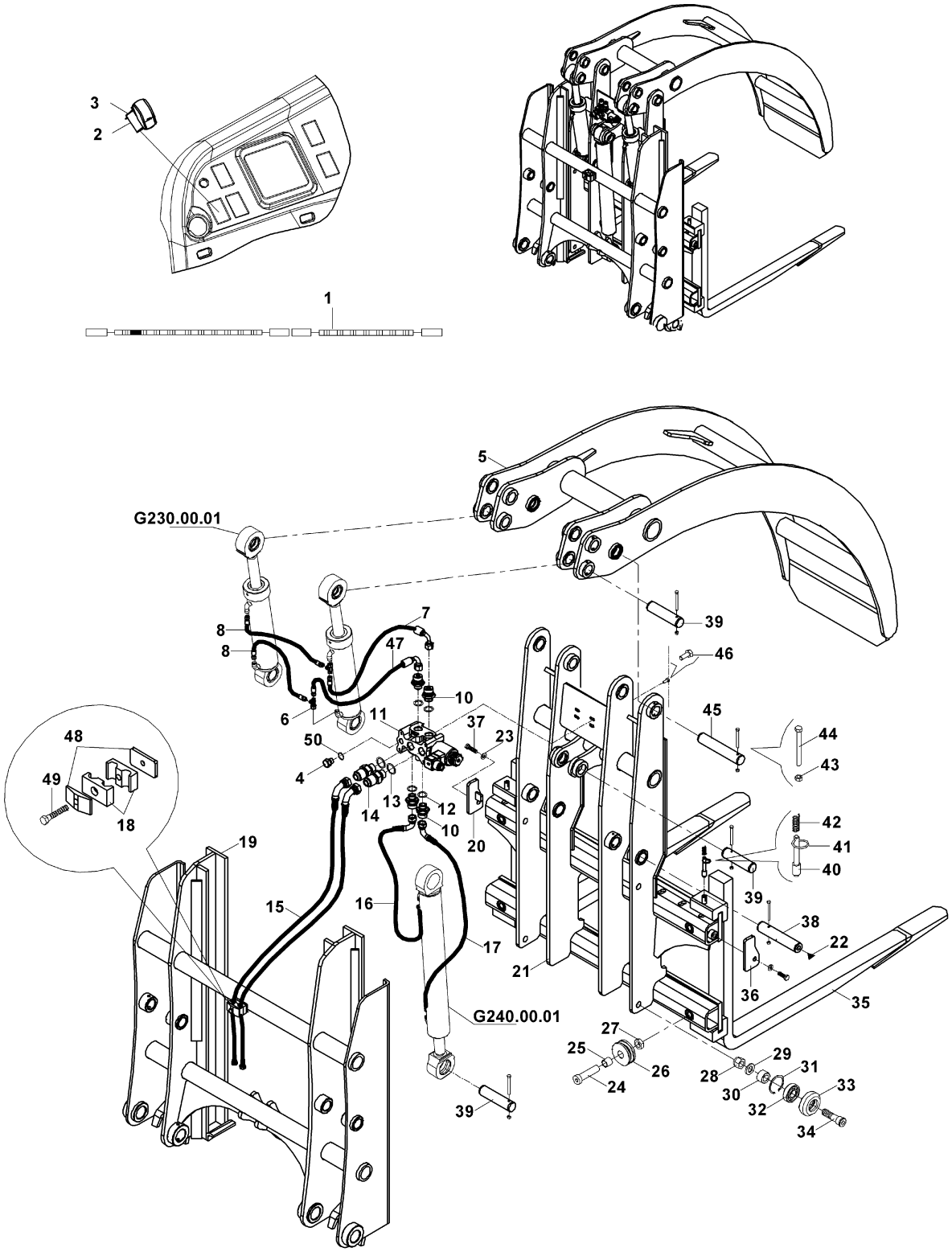

FORKLİFT APARATI (AÇILIR KEPÇE)
FORKLIFT (MULTIPURPOSE BUCKET)

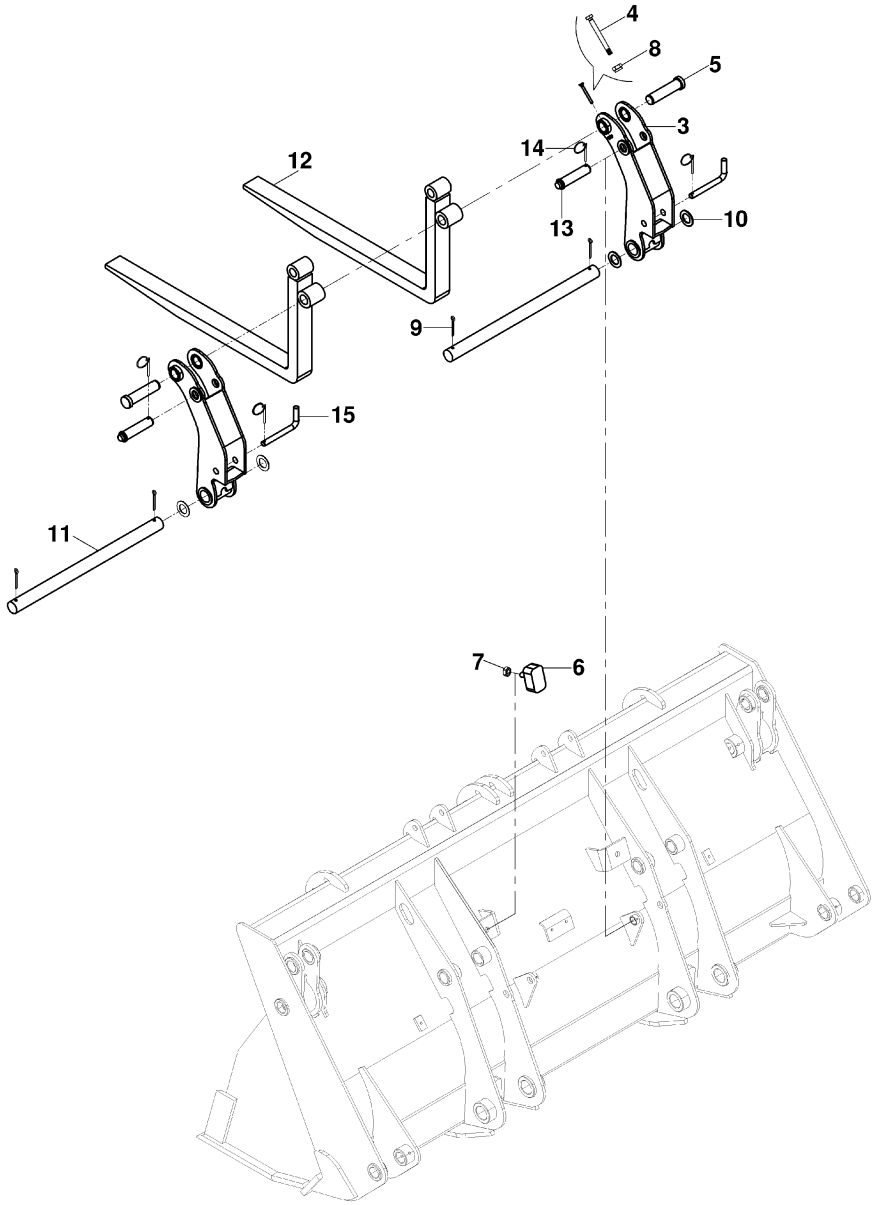

FORKLİFT APARATLI (SABİT KEPÇE 1.2 m3)
FORKLIFT (SHOVEL 1.2 m3

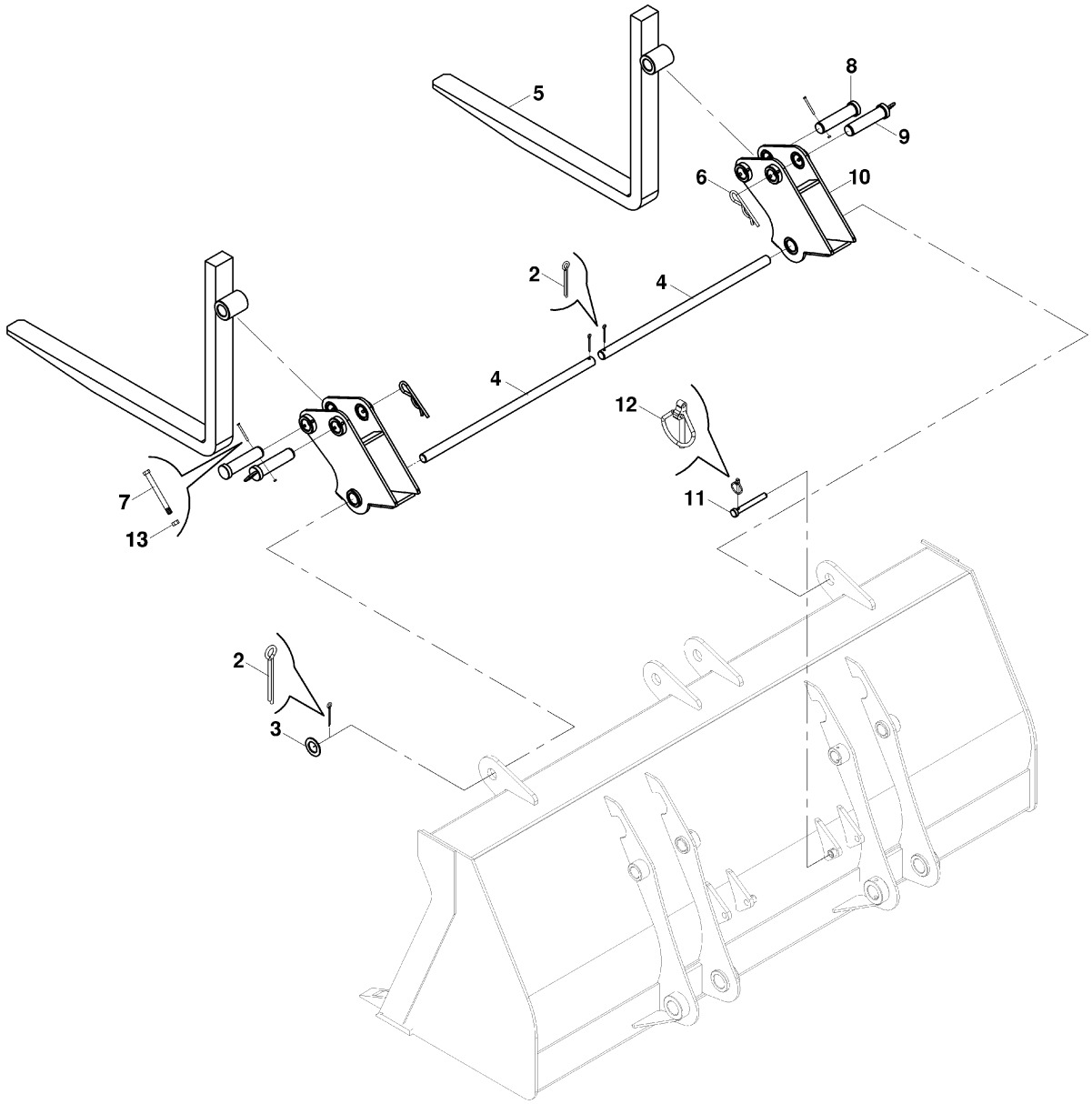

FORKLİFT APARATLI (SABİT KEPÇE 1.5 m3)
FORKLIFT (SHOVEL 1.5 m3)

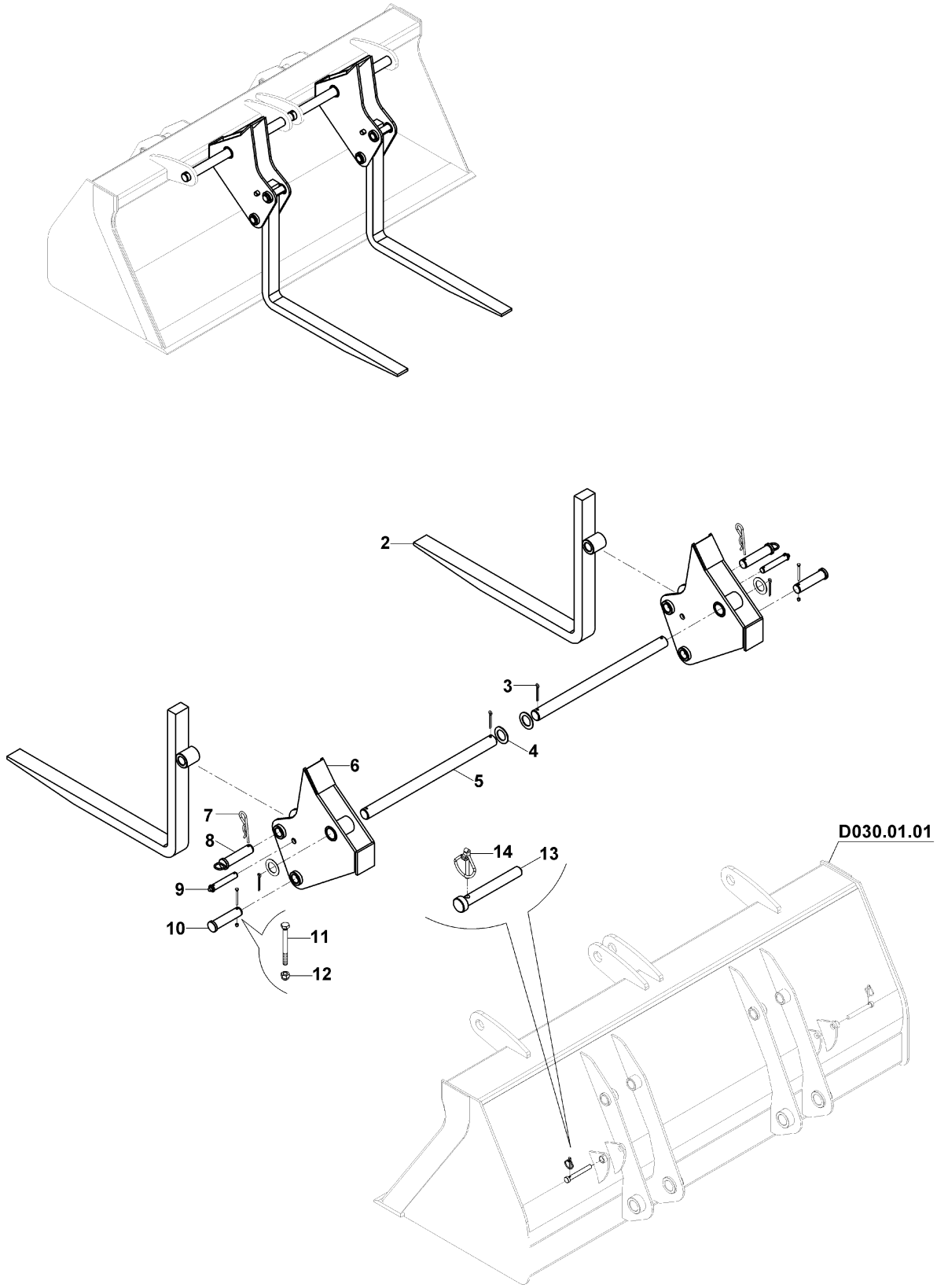

ÇABUK SÖK TAK (YÜKLEYİCİ KEPÇE)
QUICK COUPLER (LOADER)

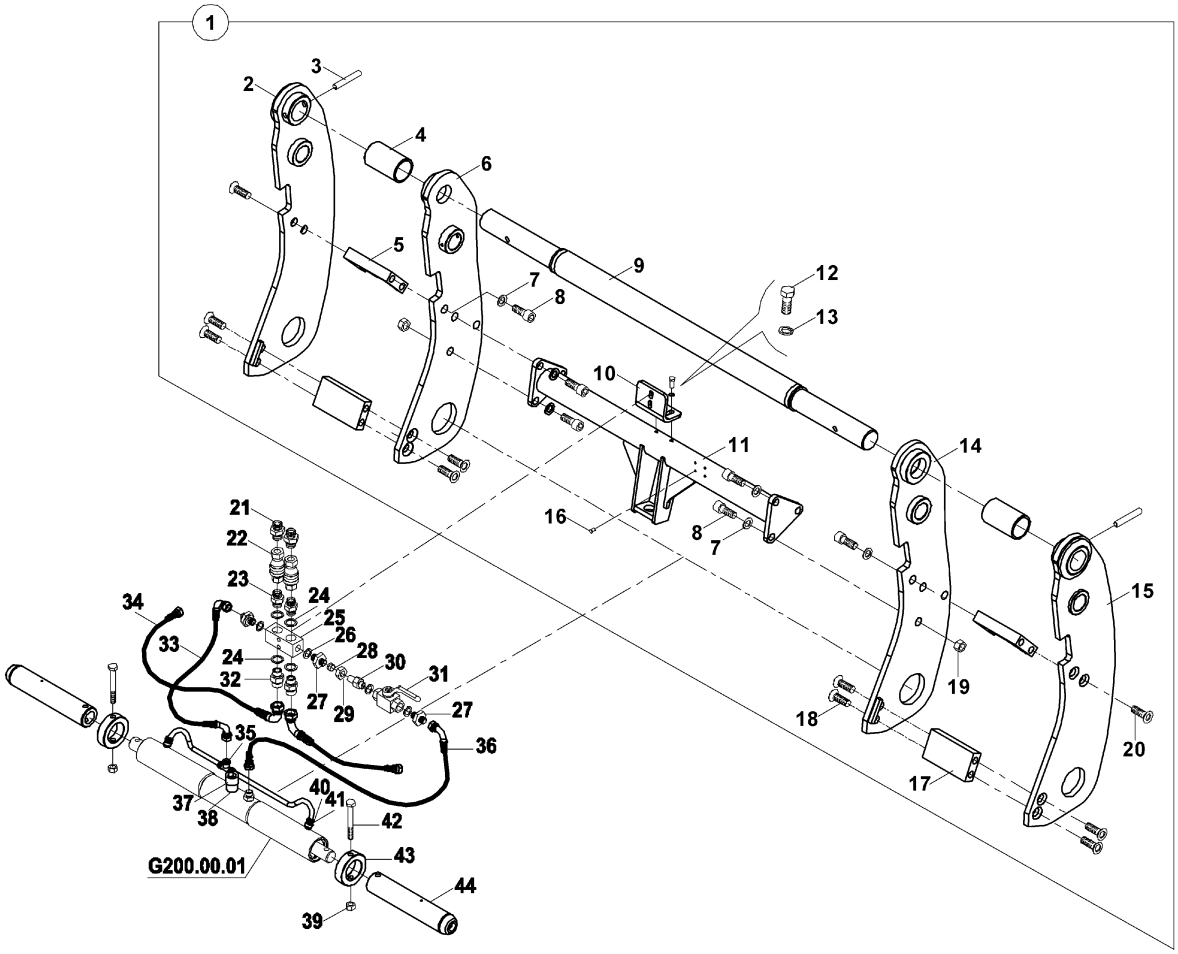

BOM MONTAJI
BOOM MOUNTING

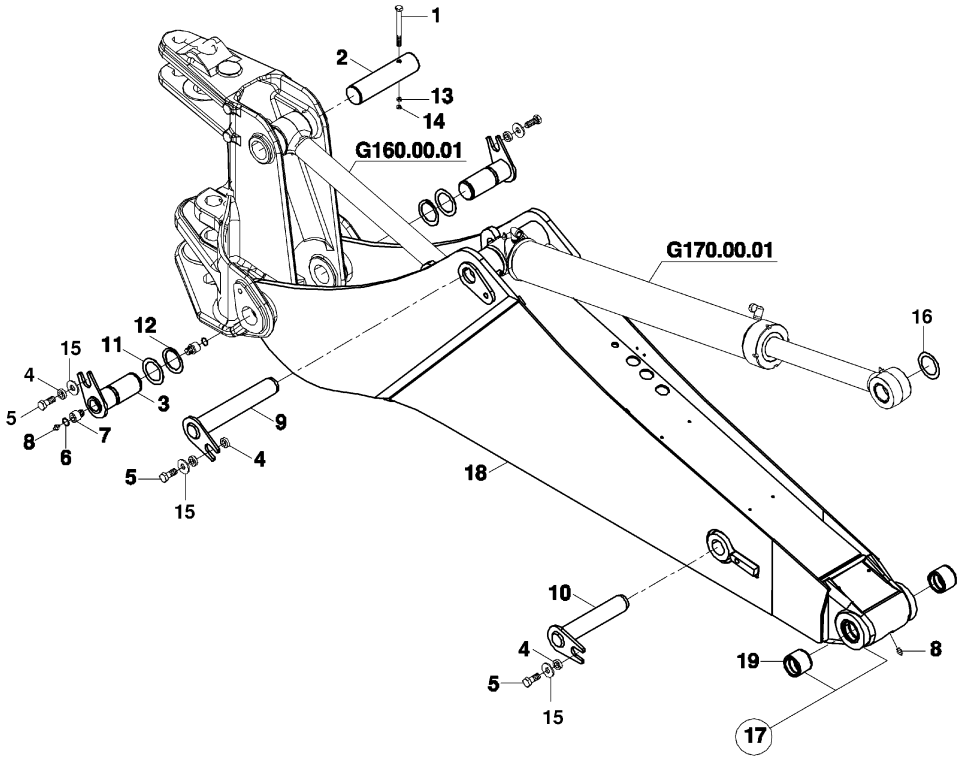

ARM MONTAJI
ARM MOUNTING

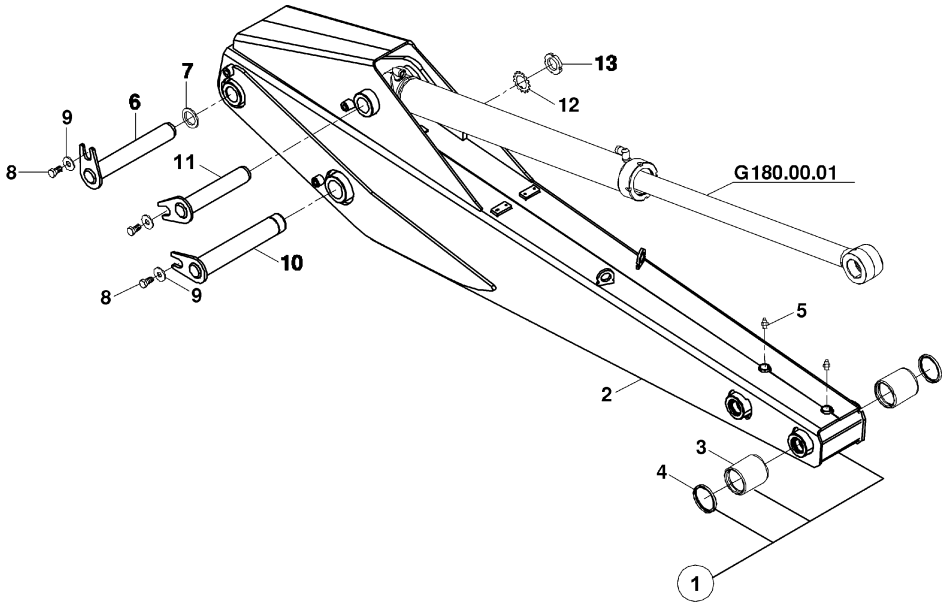

TELESKOPİK ARM MONTAJI
TELESCOPIC ARM MOUNTING

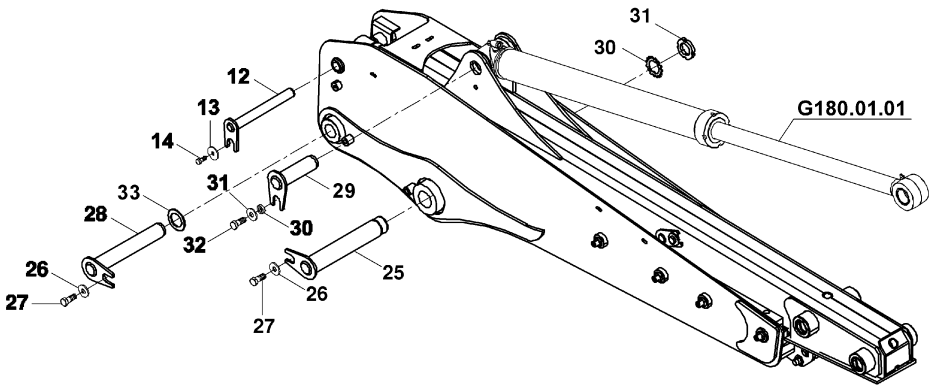

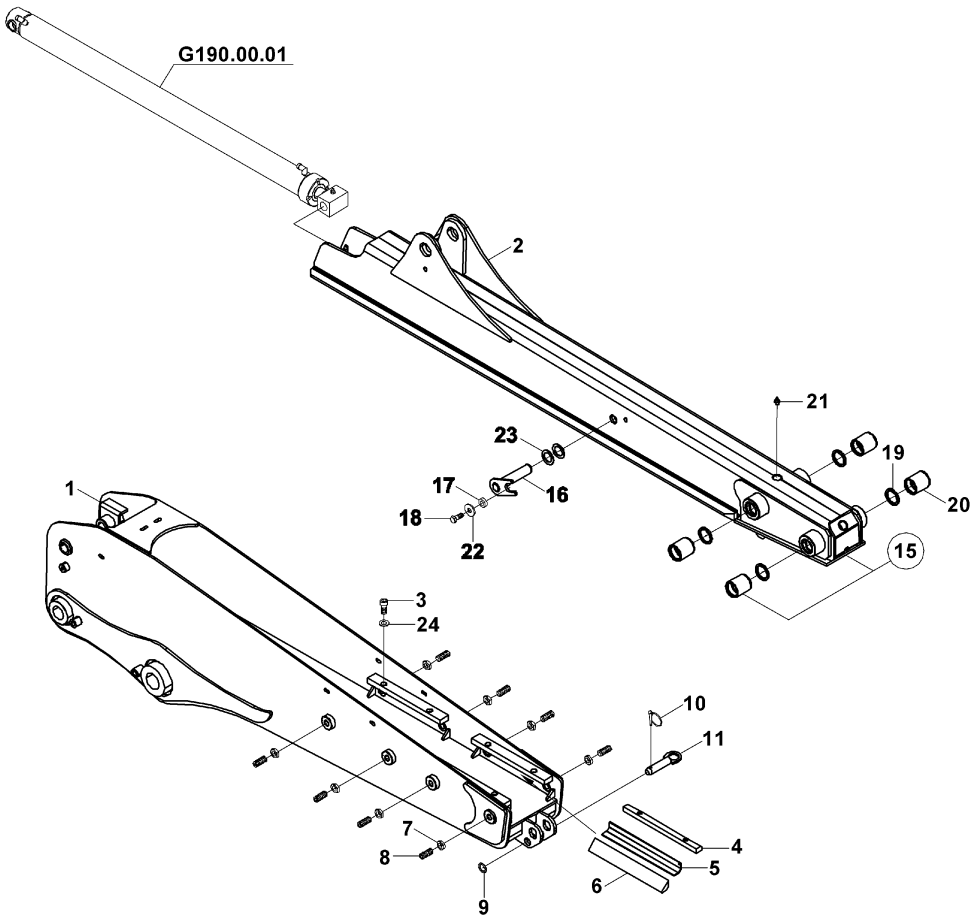

KEPÇE BAĞLANTISI
BUCKET LINKAGE

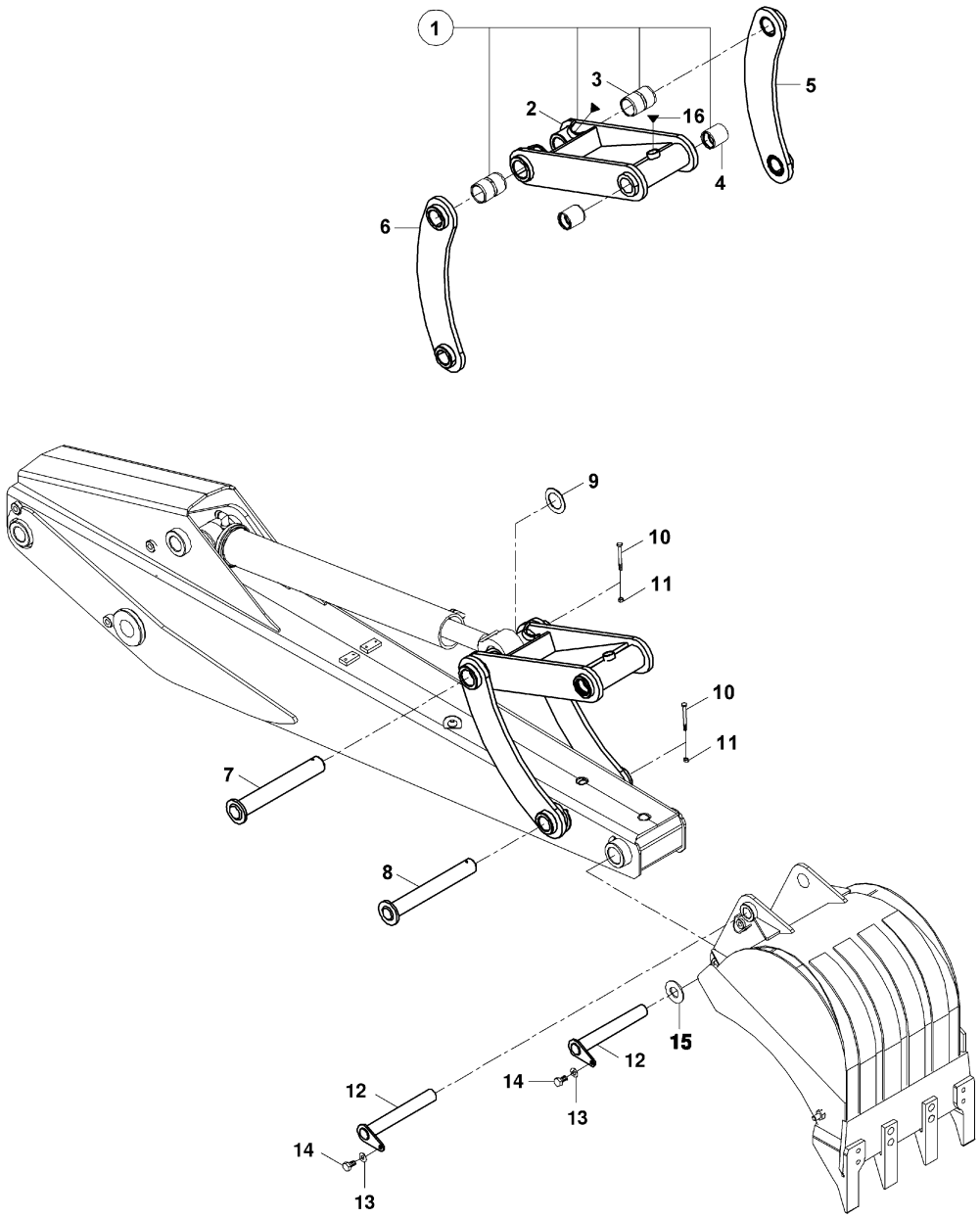

KEPÇE, KAZICI (300 mm)
BUCKET, BACKHOE (300 mm)

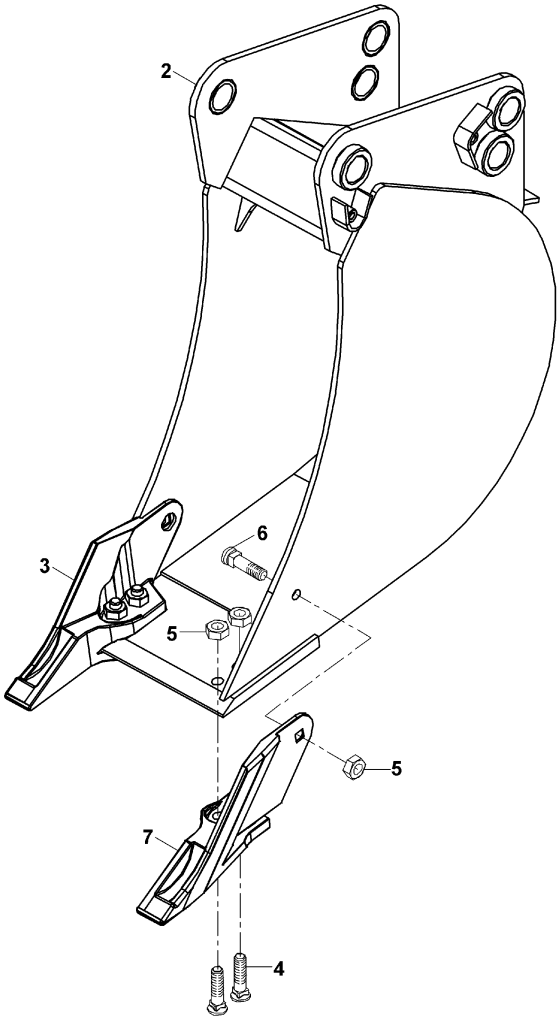

KEPÇE, KAZICI (350 mm)
BUCKET, BACKHOE (350 mm)

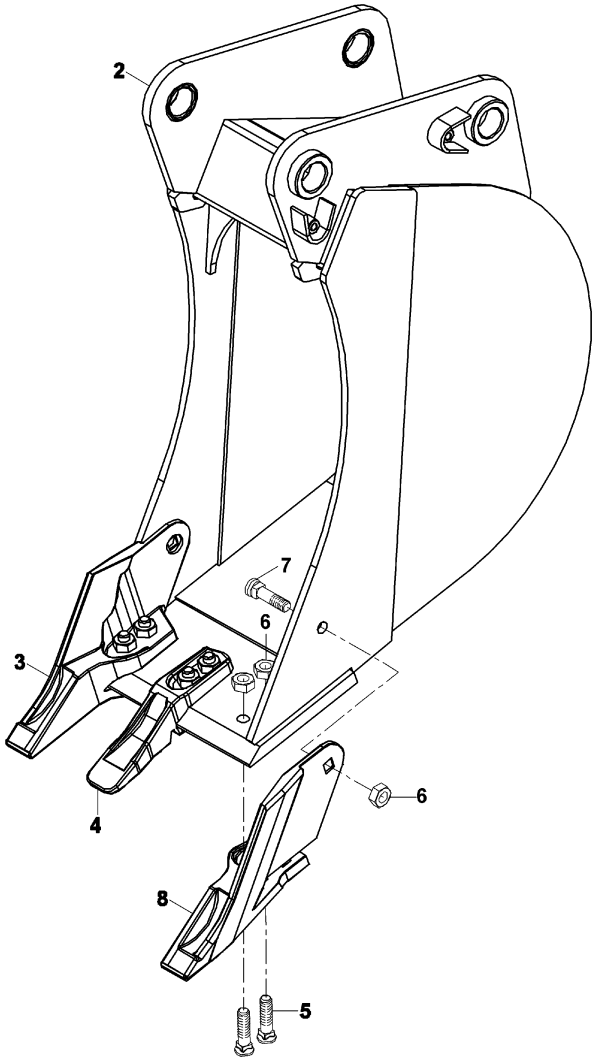

KEPÇE, KAZICI (400 mm)
BUCKET, BACKHOE (400 mm)

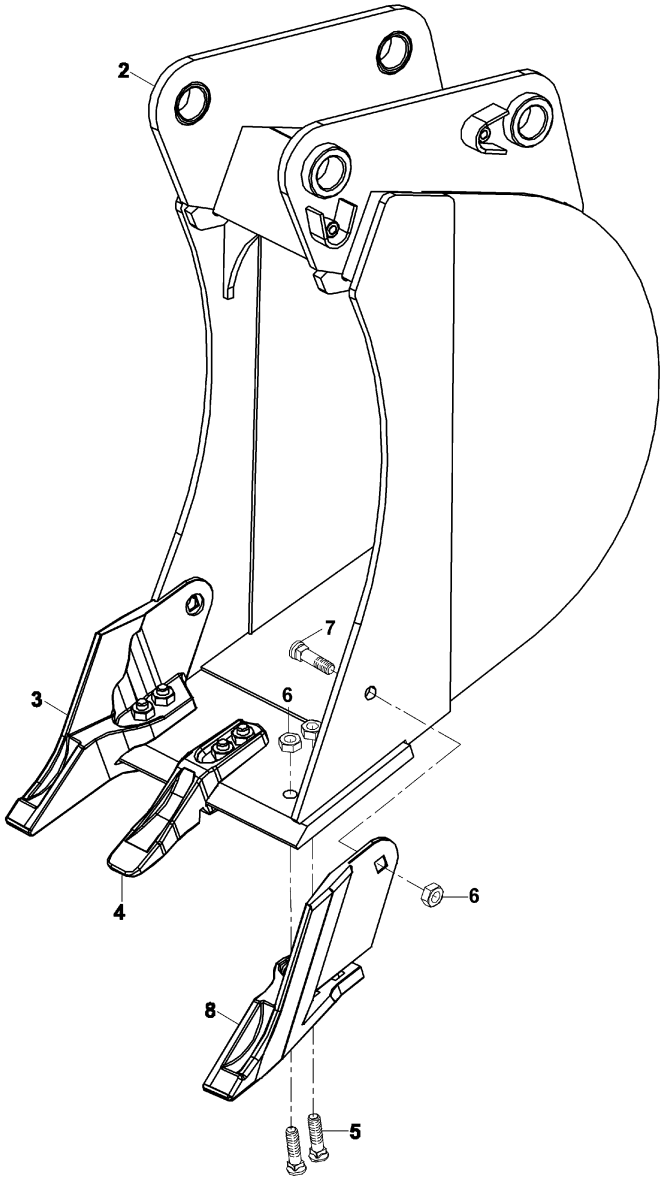

KEPÇE, KAZICI (500 mm)
BUCKET, BACKHOE (500 mm)

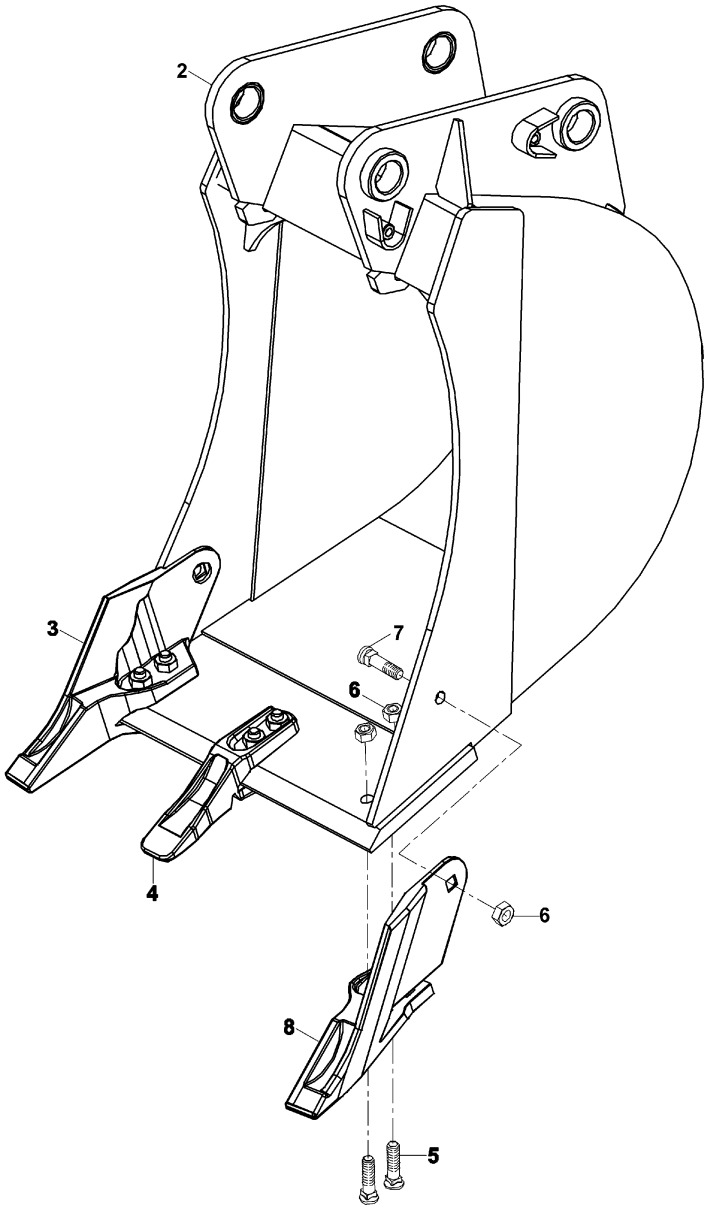

KEPÇE, KAZICI (600 mm)
BUCKET, BACKHOE (600 mm)

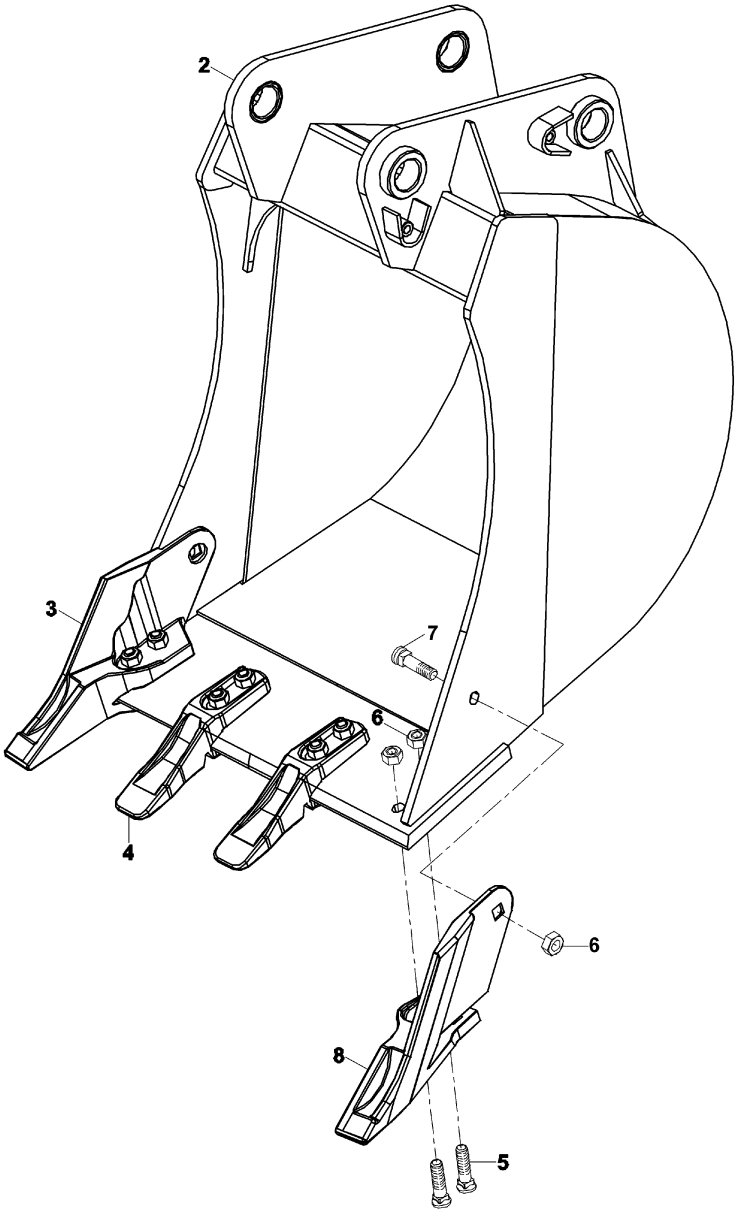

KEPÇE, KAZICI (700 mm)
BUCKET, BACKHOE (700 mm)

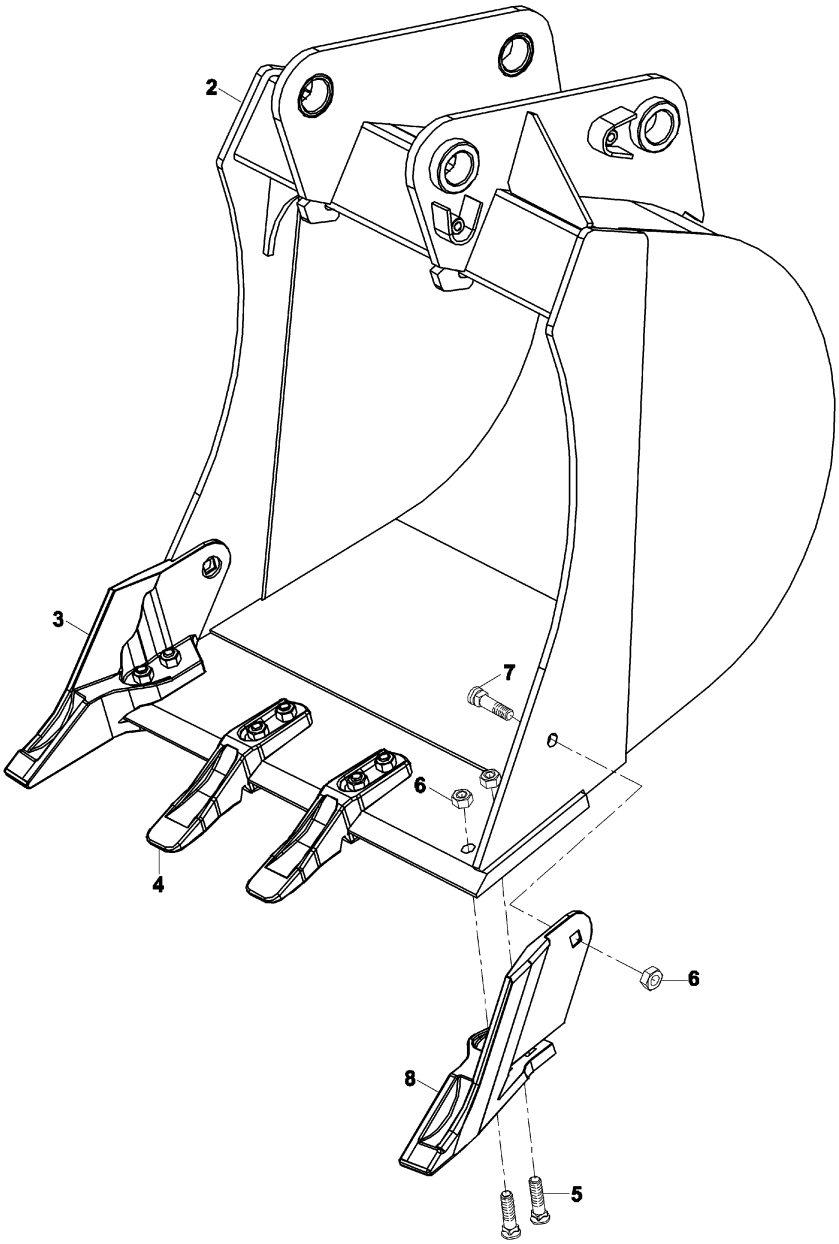

KEPÇE, KAZICI (800 mm)
BUCKET, BACKHOE (800 mm)

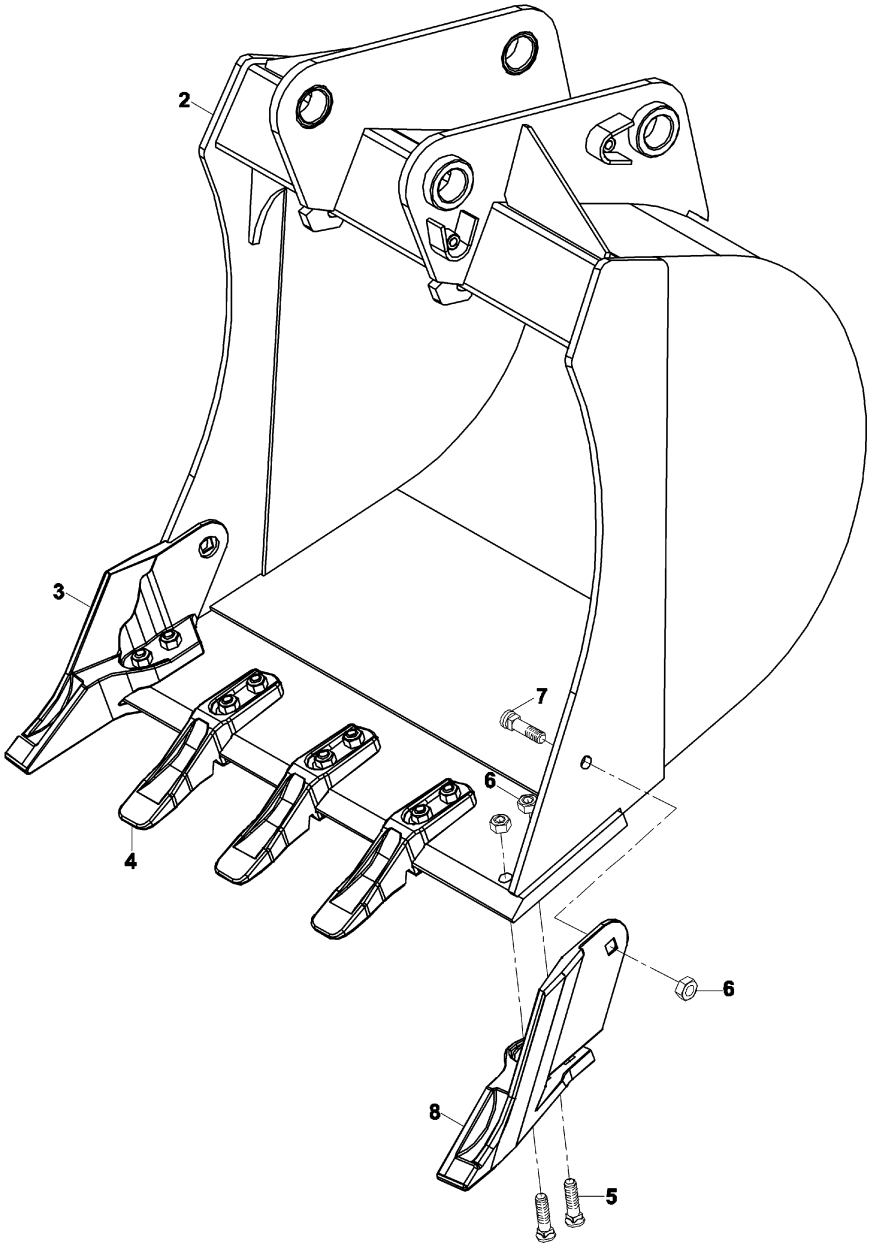

KEPÇE, KAZICI (900 mm)
BUCKET, BACKHOE (900 mm)

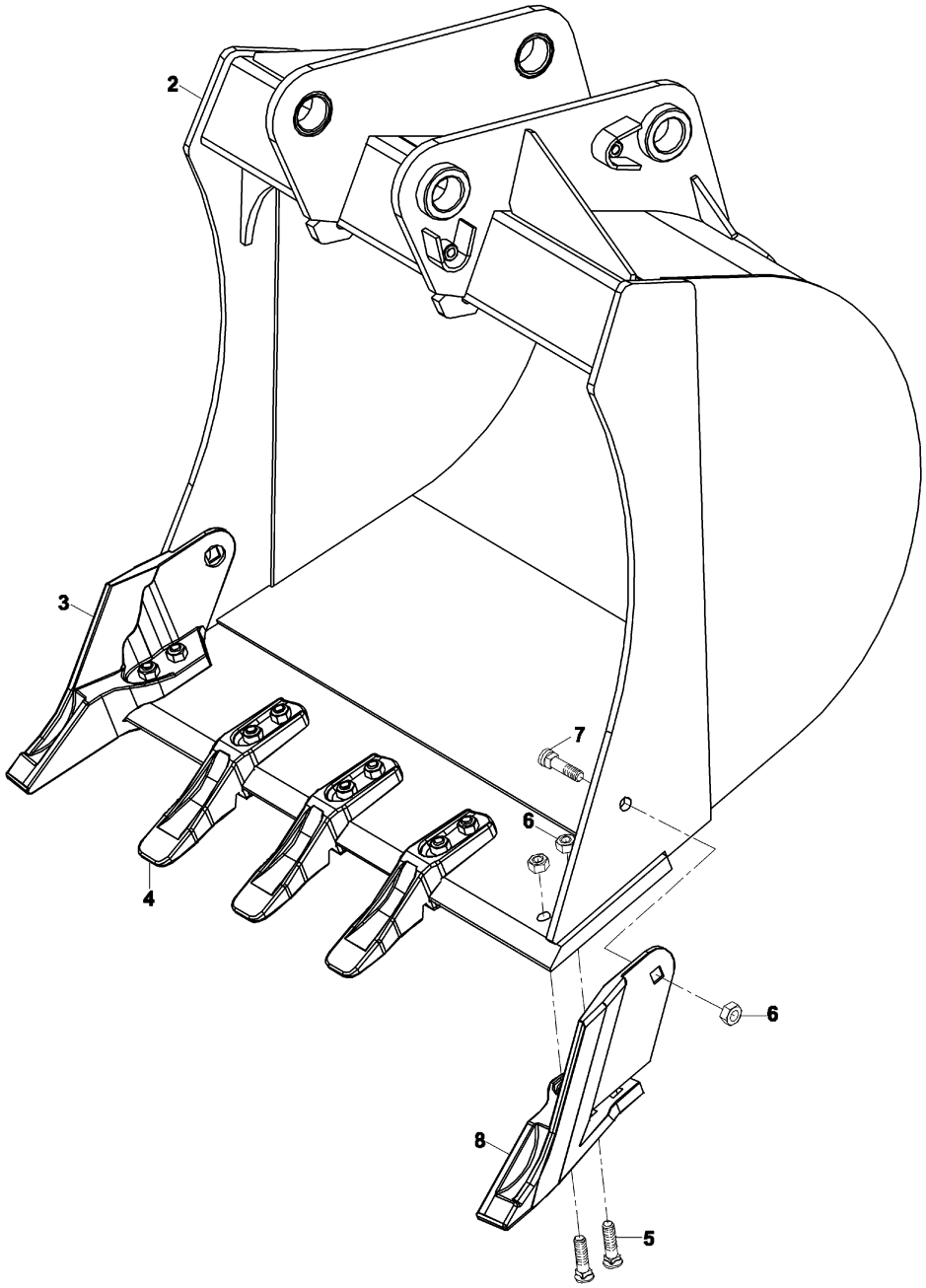

DÖNERLİ KANAL KEPÇESİ
TILTING BUCKET

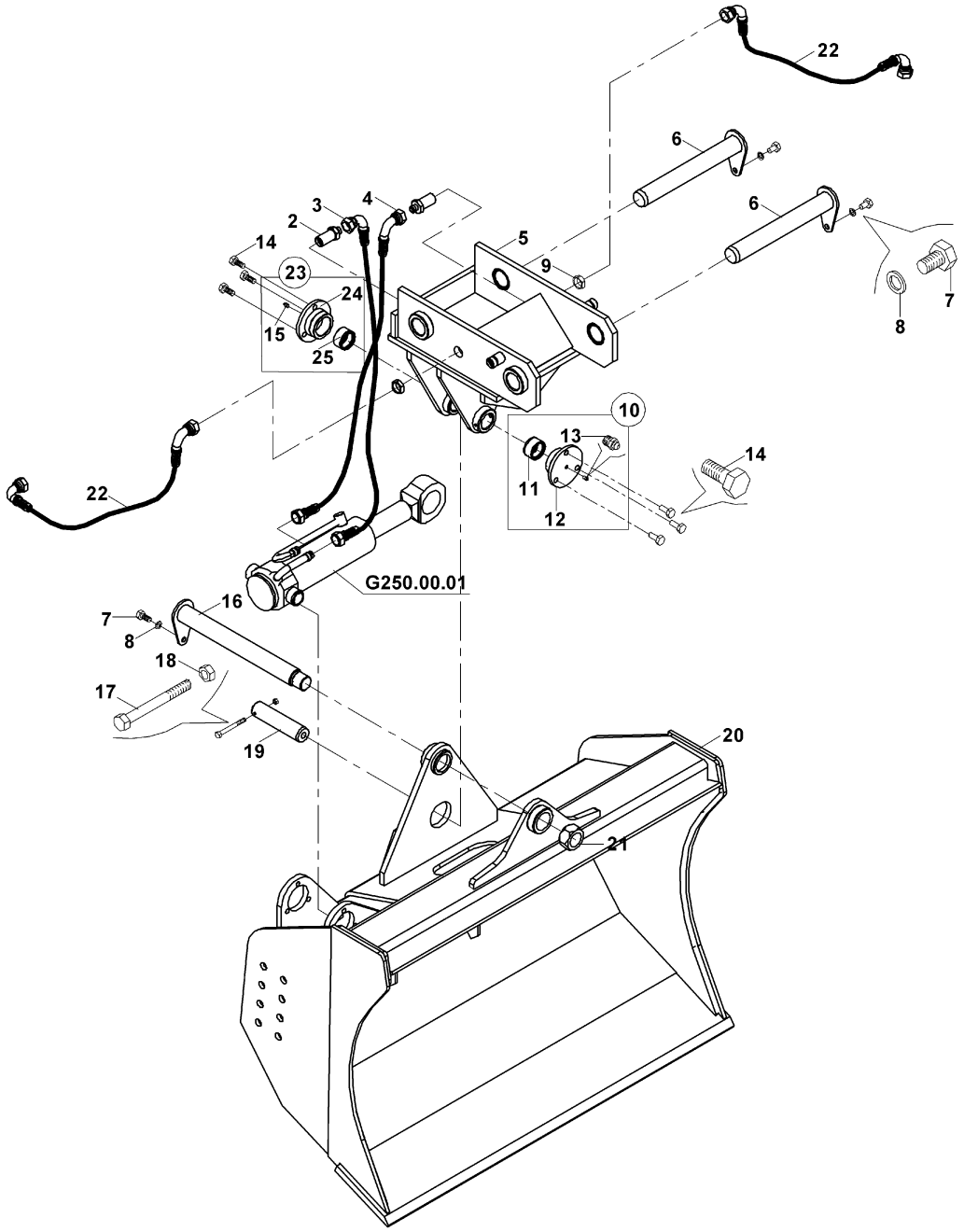

ÇABUK SÖK TAK, KAZICI
QUICK COUPLER, BACKHOE

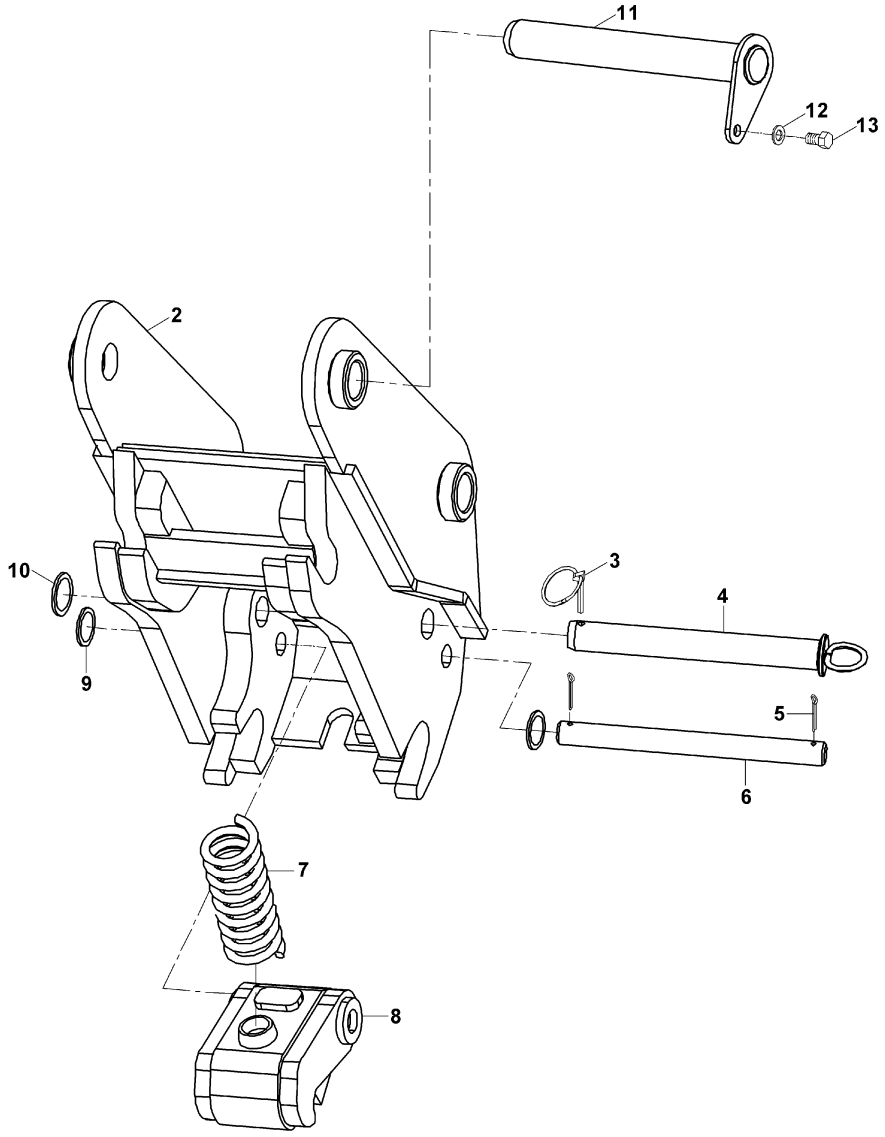

KIRICI MONTAJI (MONTABERT- SC 36)
BREAKER MOUNTING (MONTABERT- SC 36)

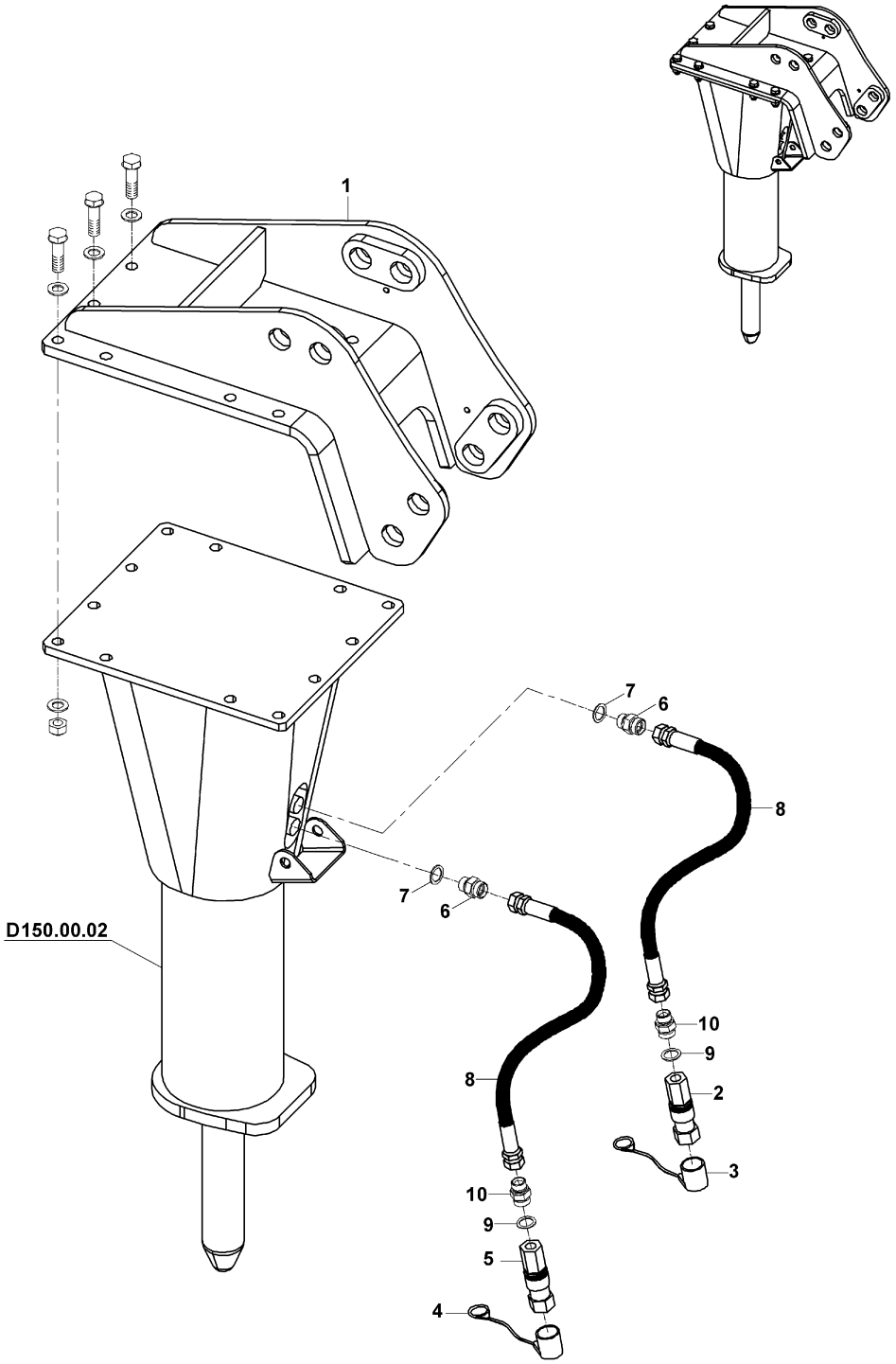

KIRICI KOMPLESİ (MONTABERT- SC 36)
BREAKER ASSEMBLY (MONTABERT- SC 36)

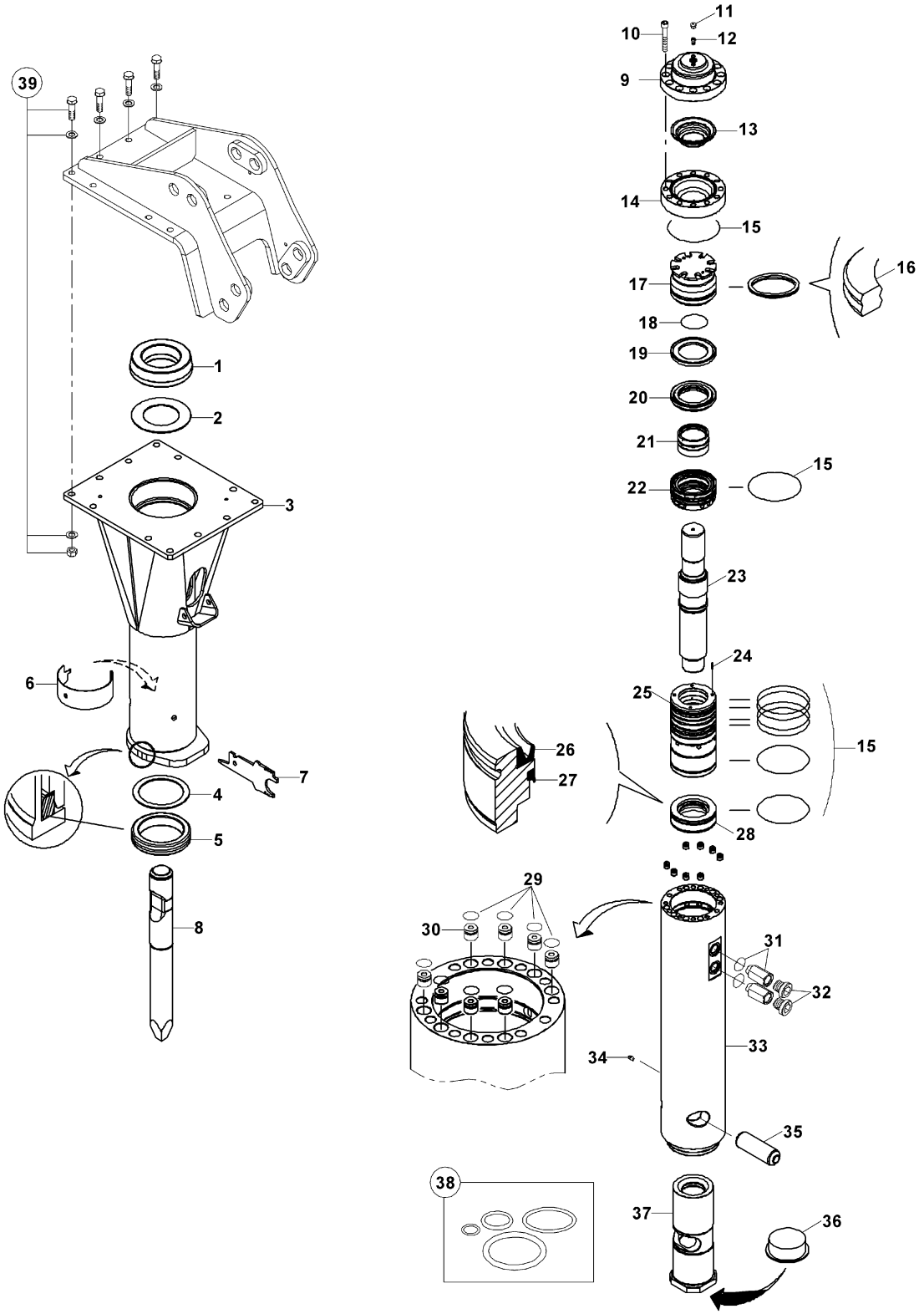

KIRICI KOMPLESİ (MONTABERT- SC 36)
BREAKER ASSEMBLY (MONTABERT- SC 36)

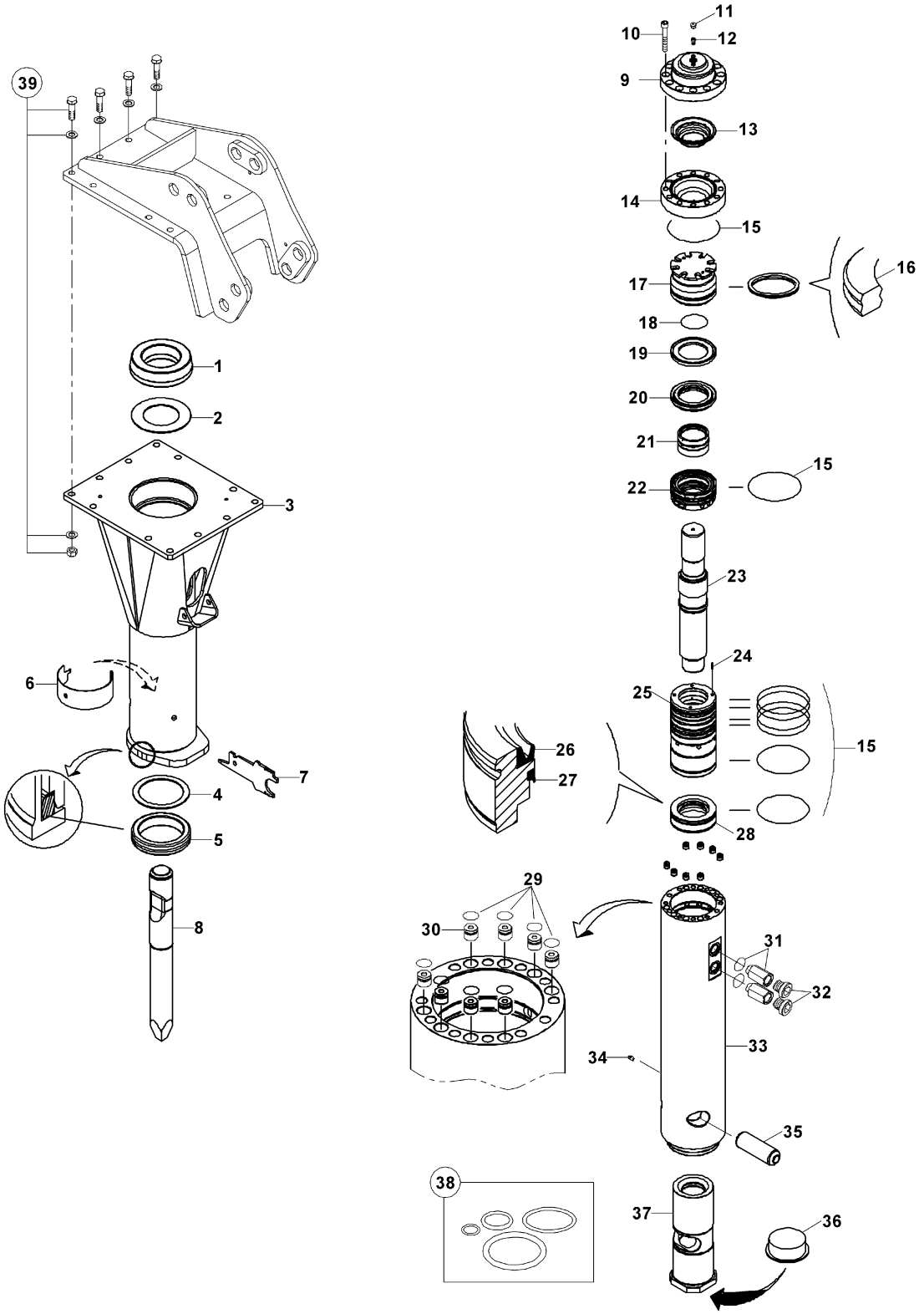

KIRICI MONTAJI (MONTABERT- SC 28)
BREAKER MOUNTING (MONTABERT- SC 28)

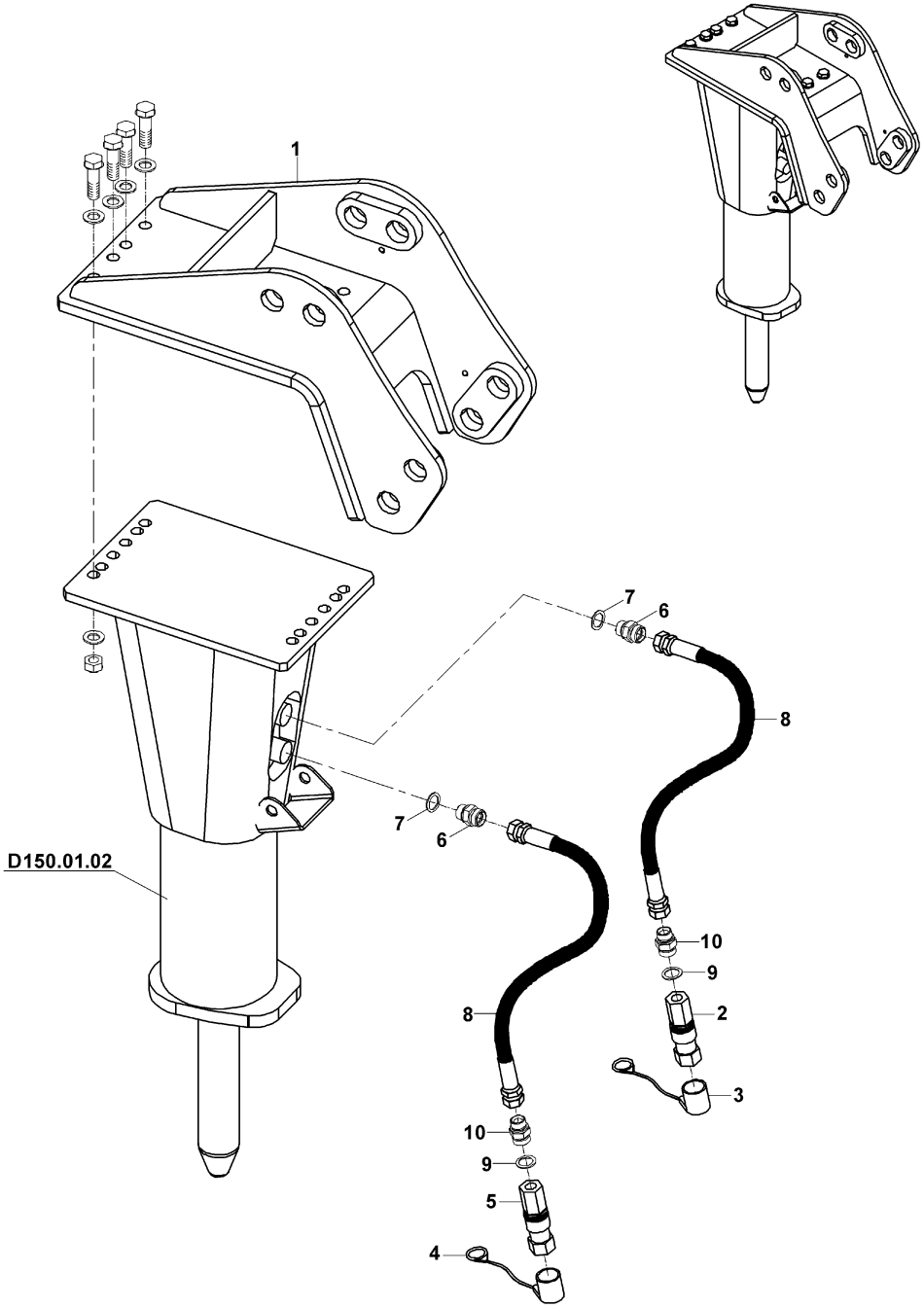

KIRICI KOMPLESİ (MONTABERT- SC 28)
BREAKER ASSEMBLY (MONTABERT- SC 28)

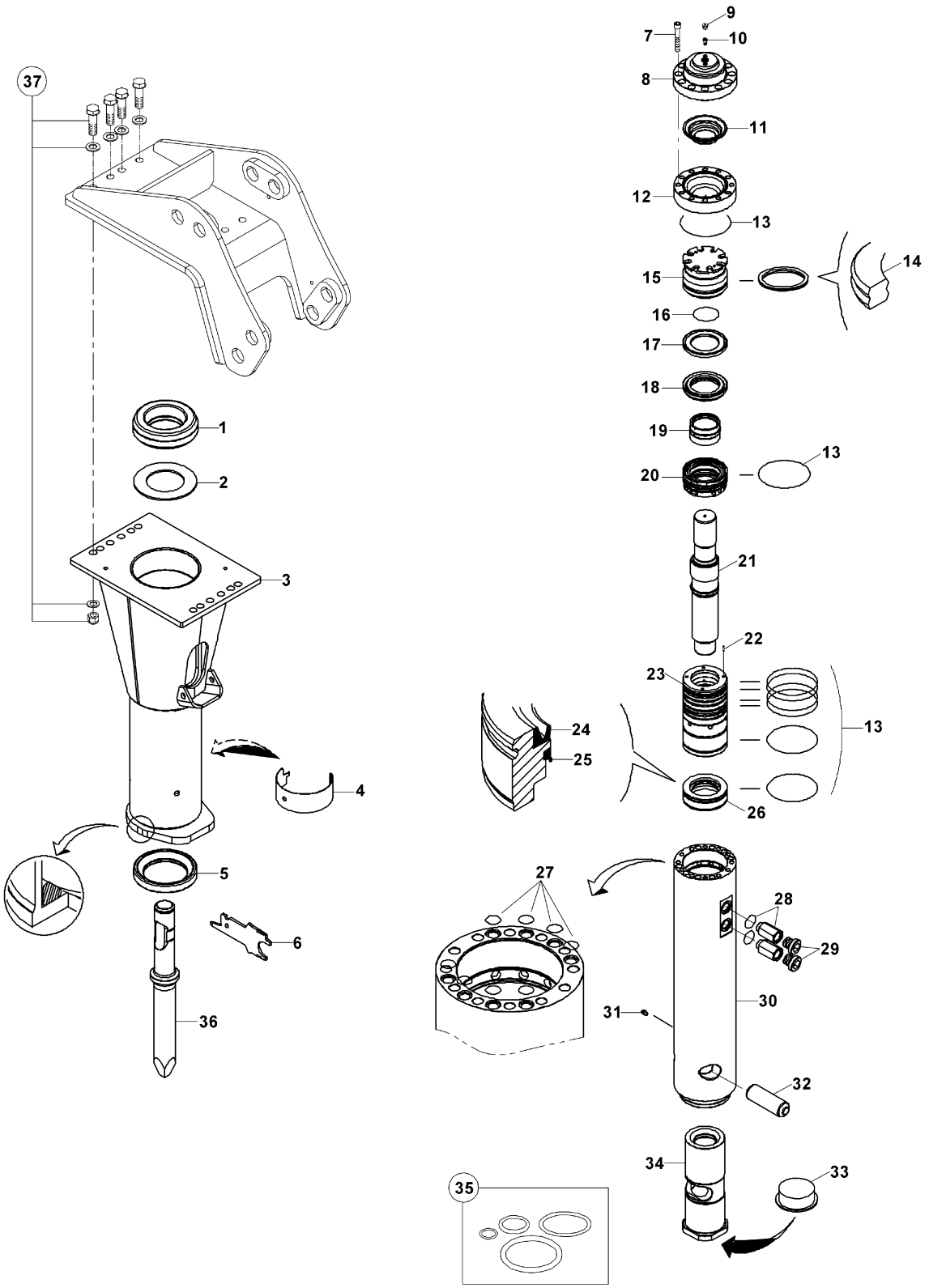

KIRICI MONTAJI (DEMO DMB50)
BREAKER MOUNTING (DEMO DMB50)

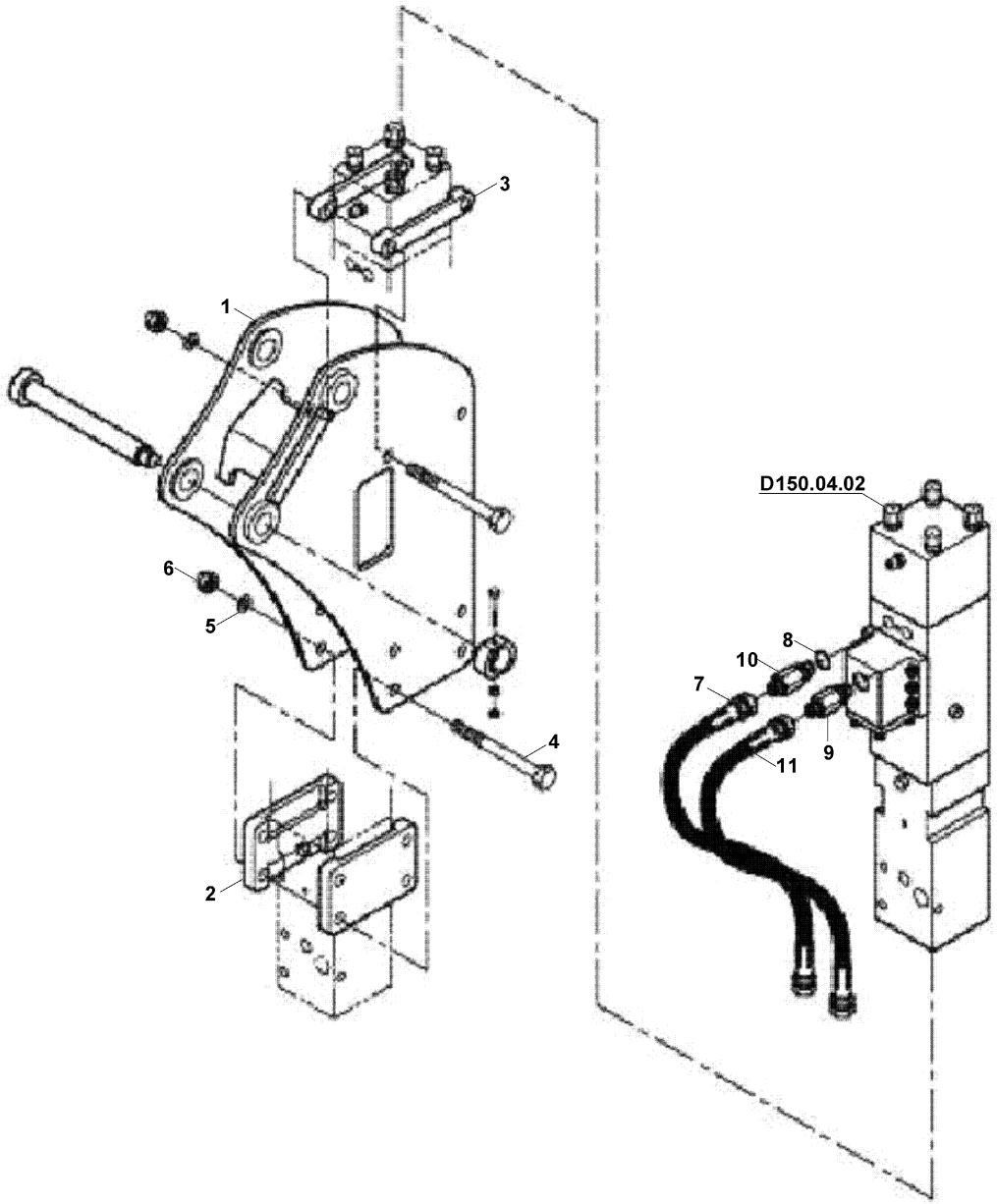

KIRICI KOMPLESİ (DEMO DMB50)
BREAKER ASSEMBLY (DEMO DMB50)

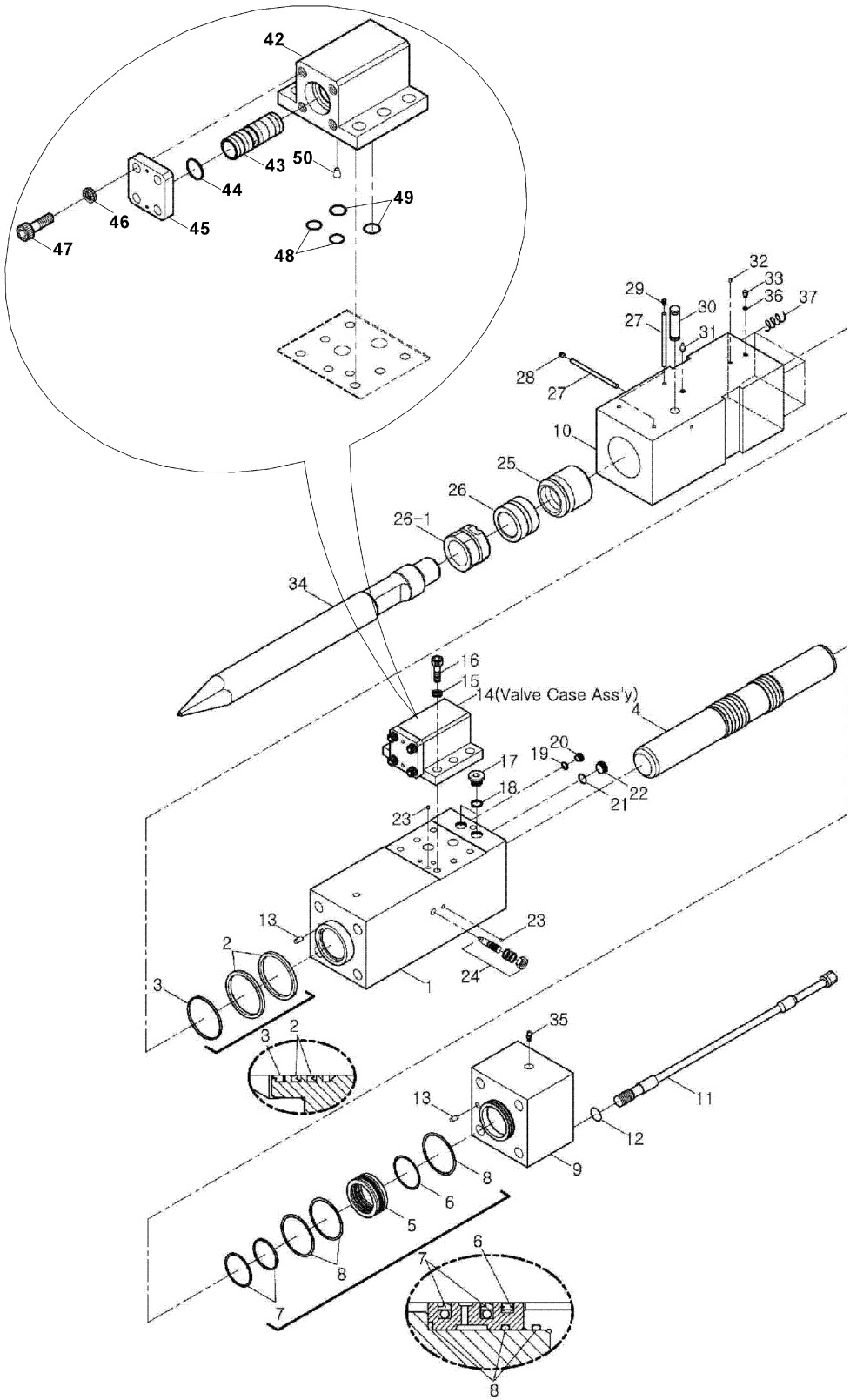

KIRICI KOMPLESİ (DEMO DMB50)
BREAKER ASSEMBLY (DEMO DMB50)

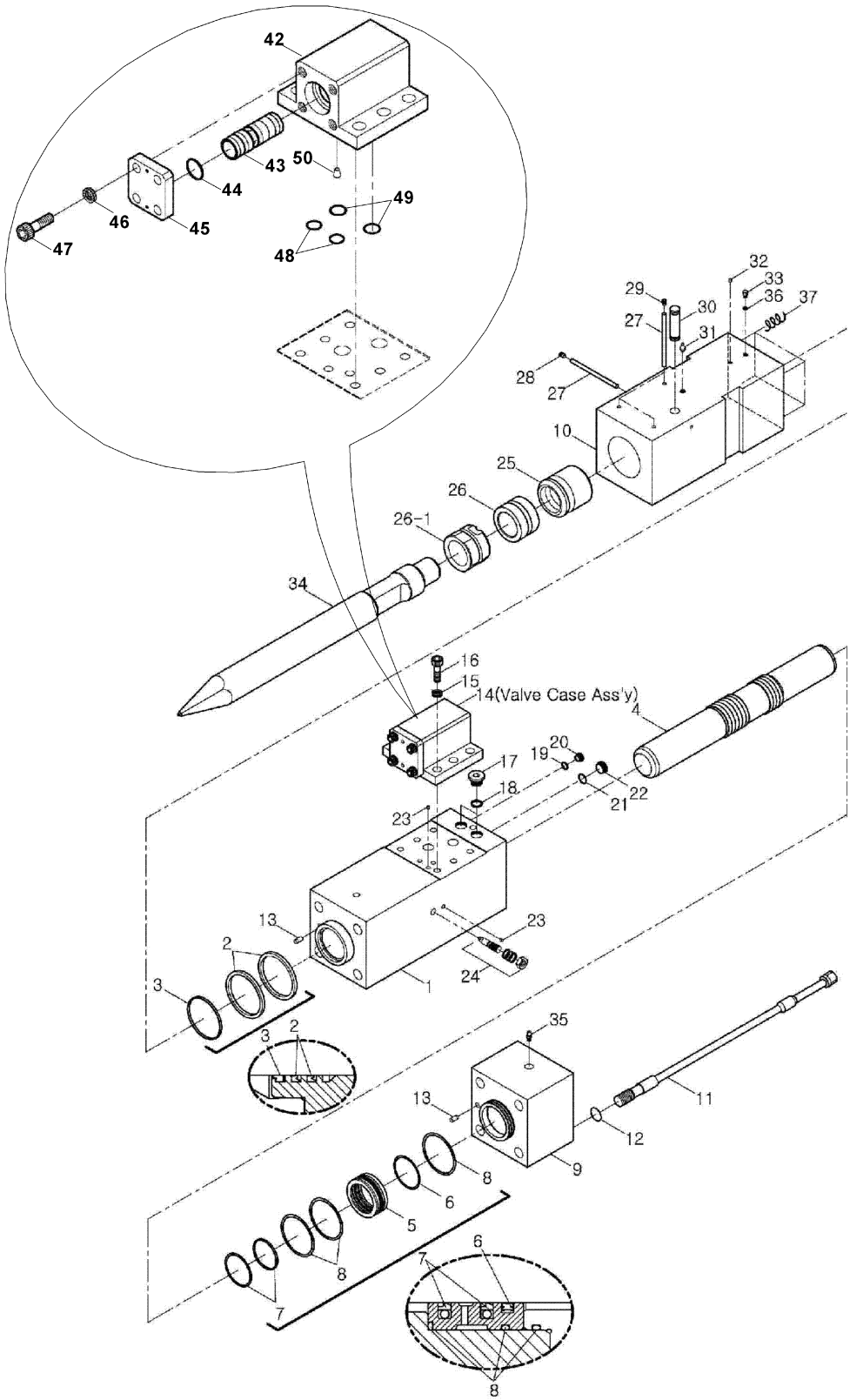

KIRICI MONTAJI (DEMO DMB70)
BREAKER MOUNTING (DEMO DMB70)

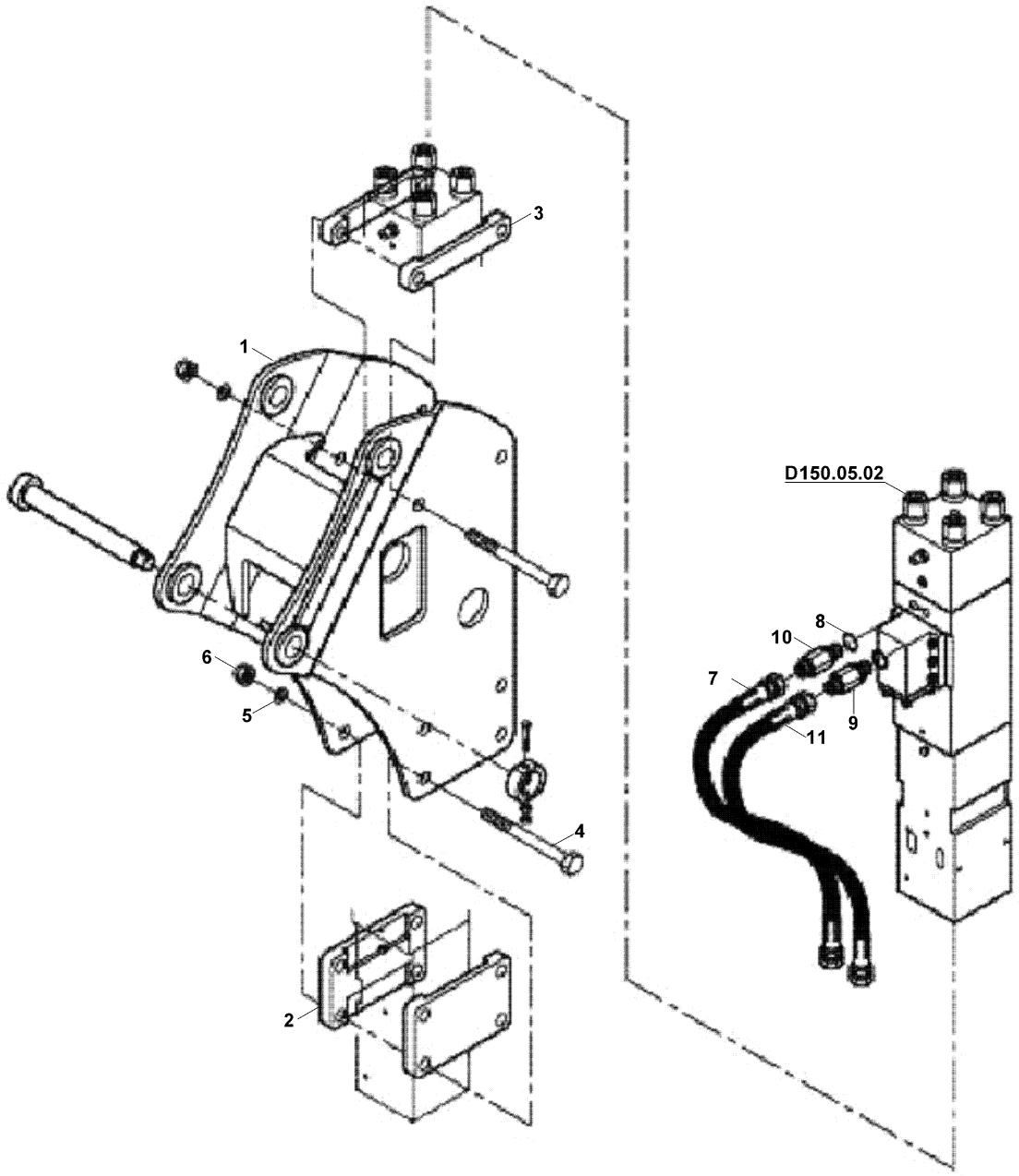

KIRICI KOMPLESİ (DEMO DMB70)
BREAKER ASSEMBLY (DEMO DMB70)

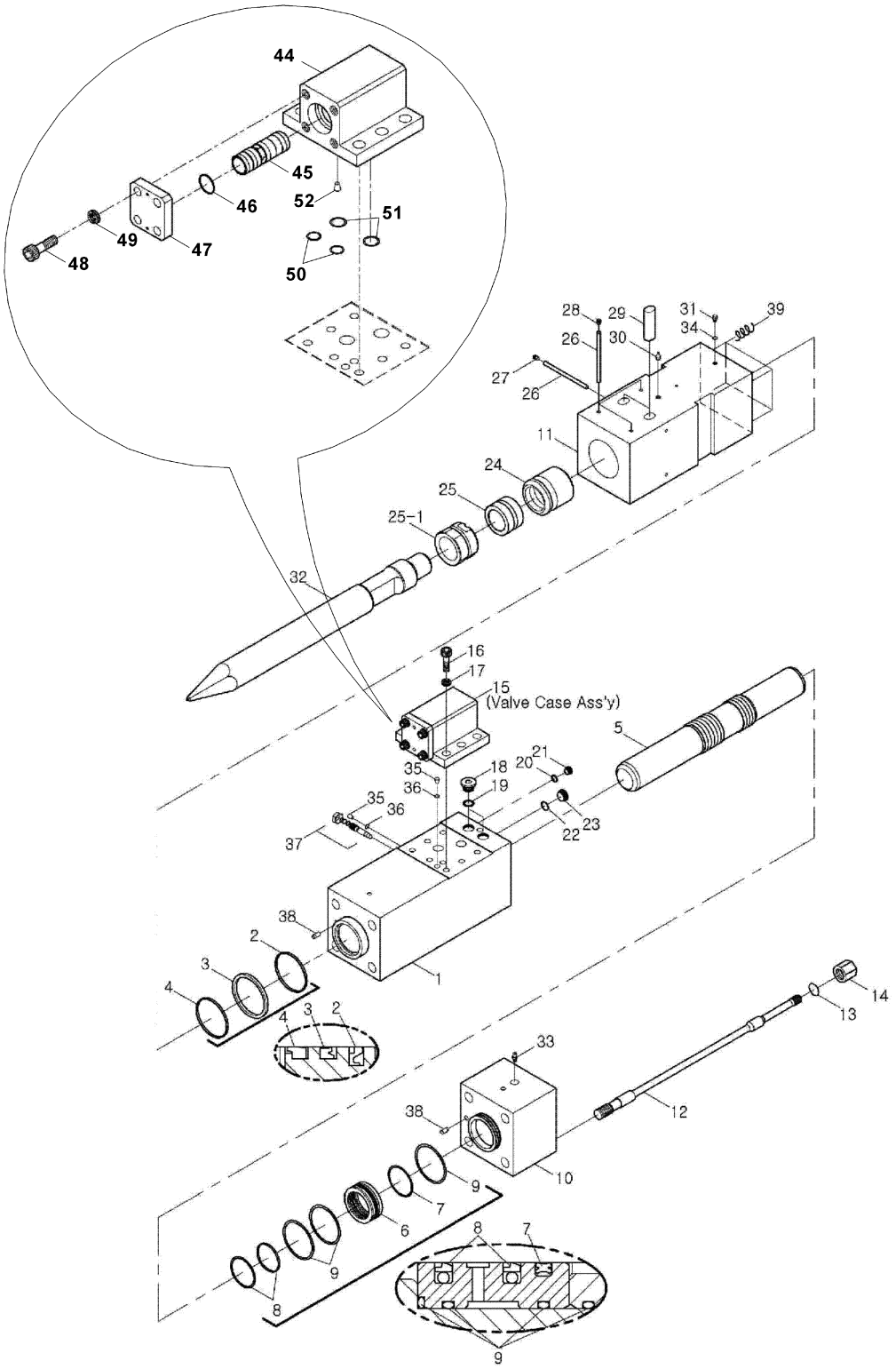

KIRICI KOMPLESİ (DEMO DMB70)
BREAKER ASSEMBLY (DEMO DMB70)

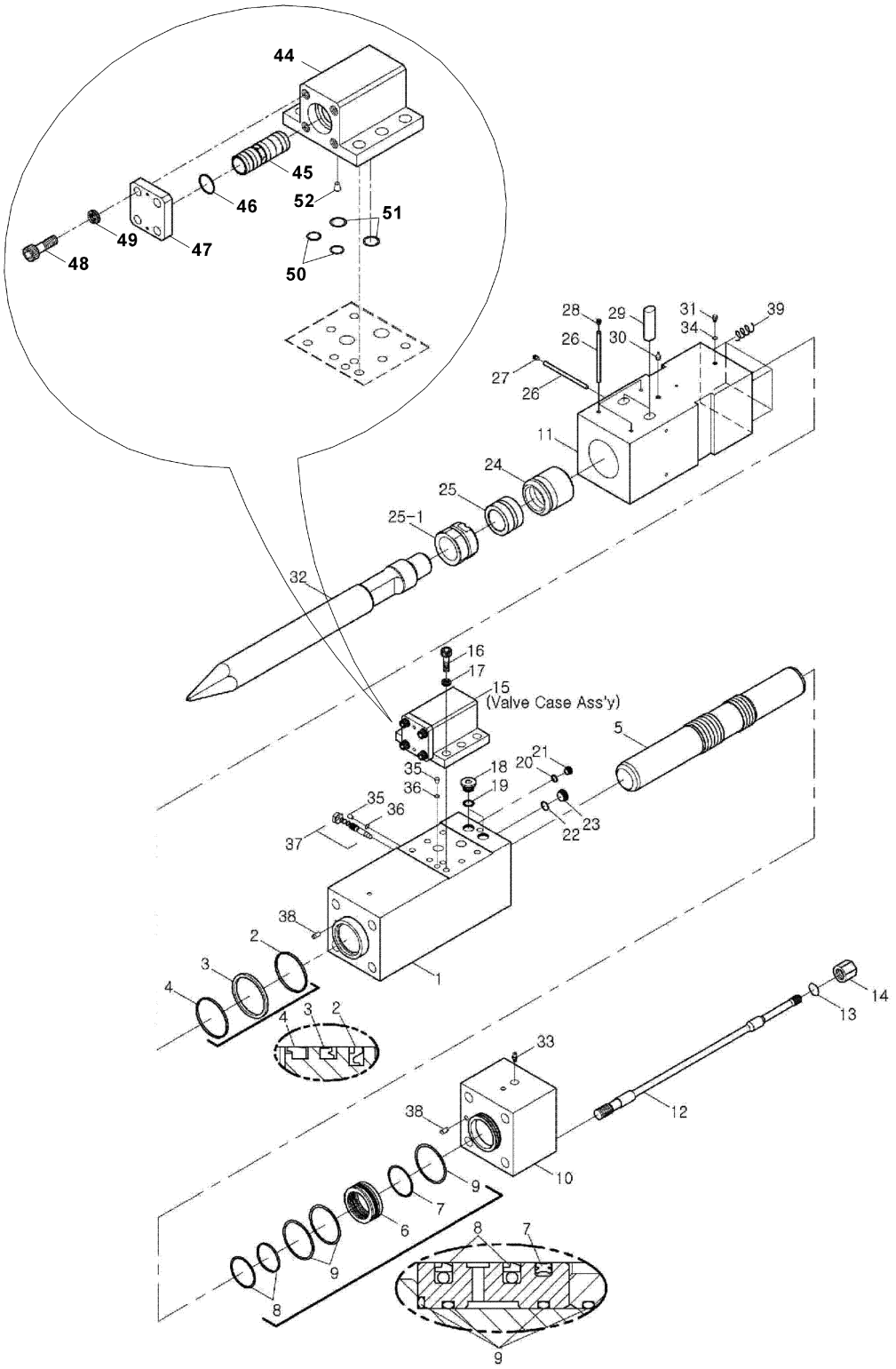

KIRICI MONTAJI (LİFTON LH 360)
BREAKER MOUNTING (LIFTON LH 360)

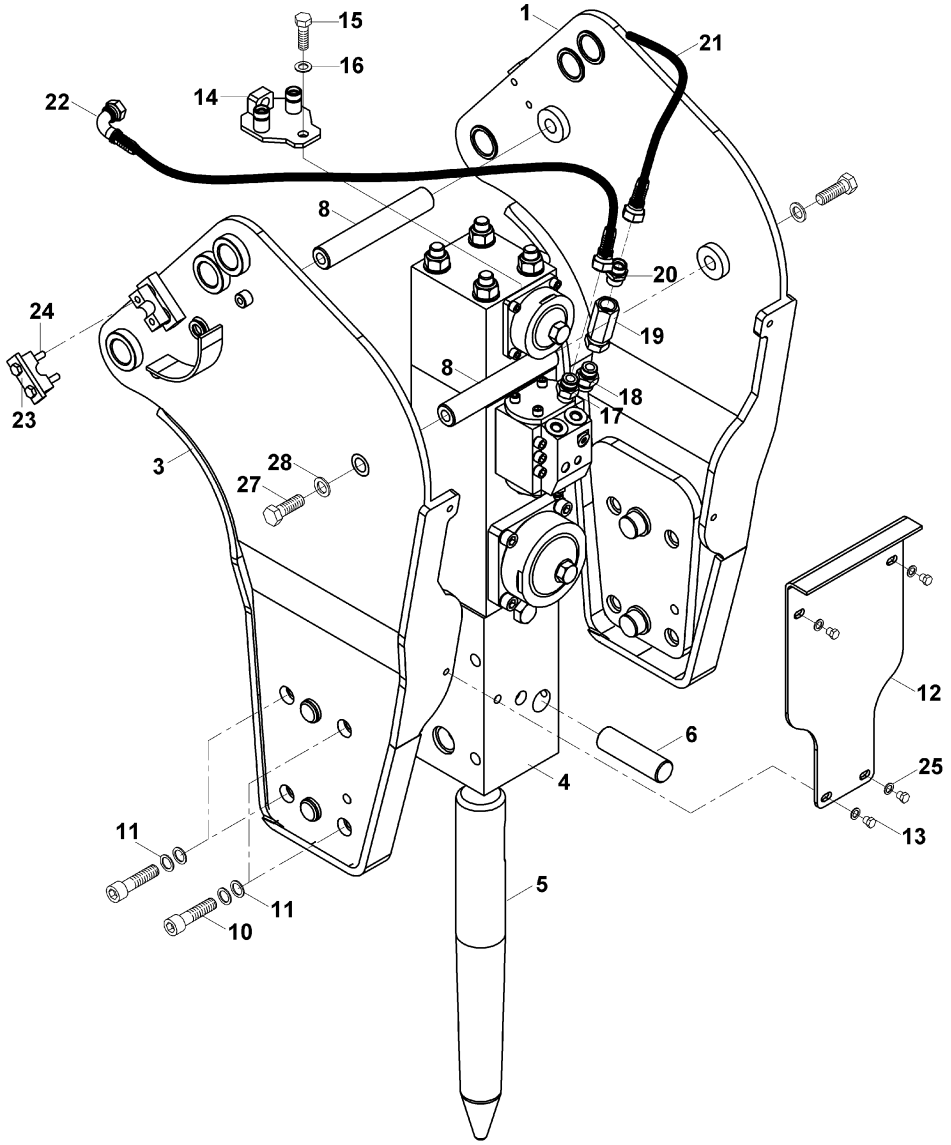

KIRICI KOMPLESİ (LIFTON LH 360)
BREAKER ASSEMBLY (LIFTON LH 360)

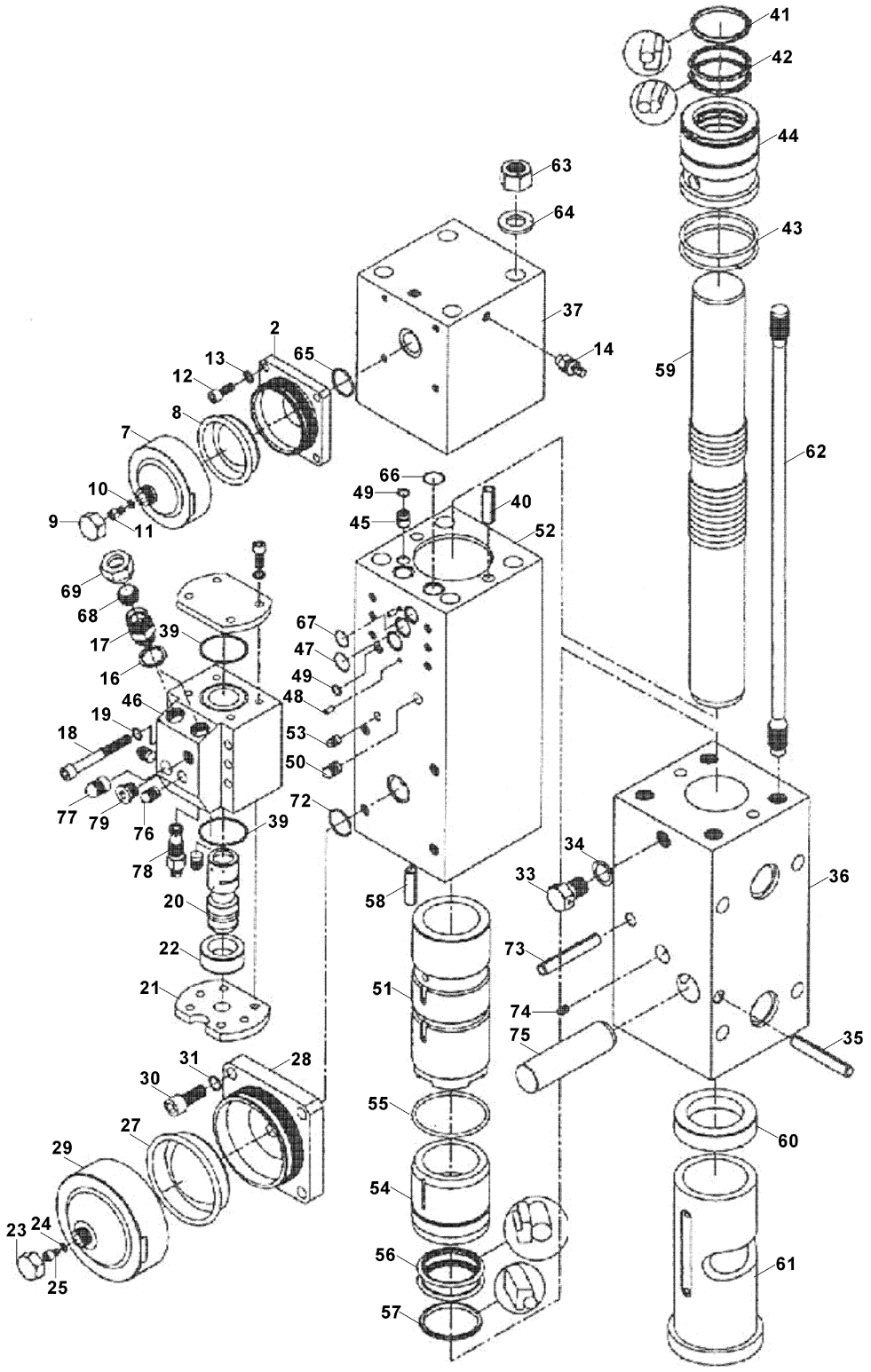

KIRICI KOMPLESİ (LIFTON LH 360)
BREAKER ASSEMBLY (LIFTON LH 360)

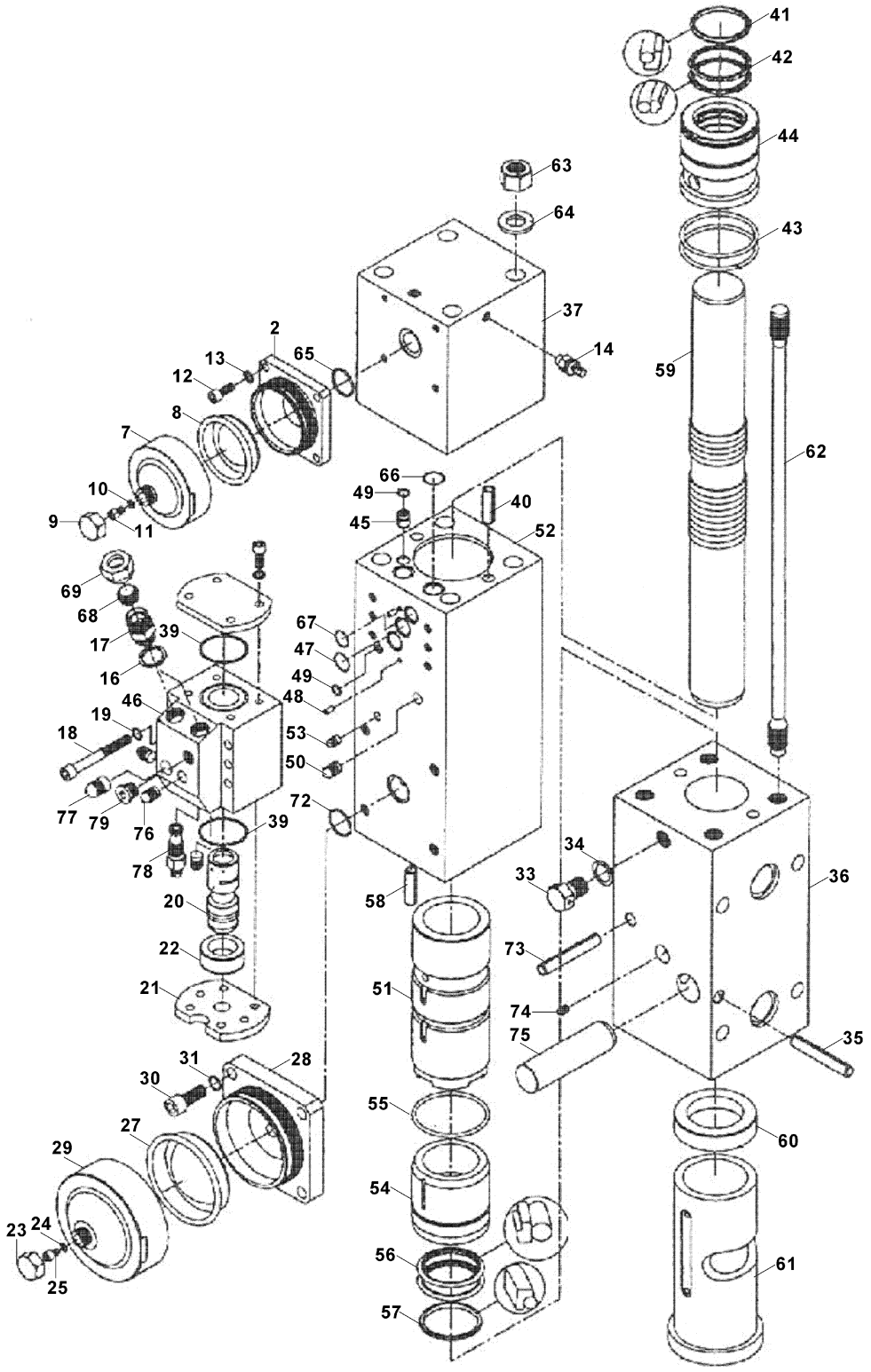

KIRICI MONTAJI (TOKU)
BREAKER MOUNTING (TOKU)

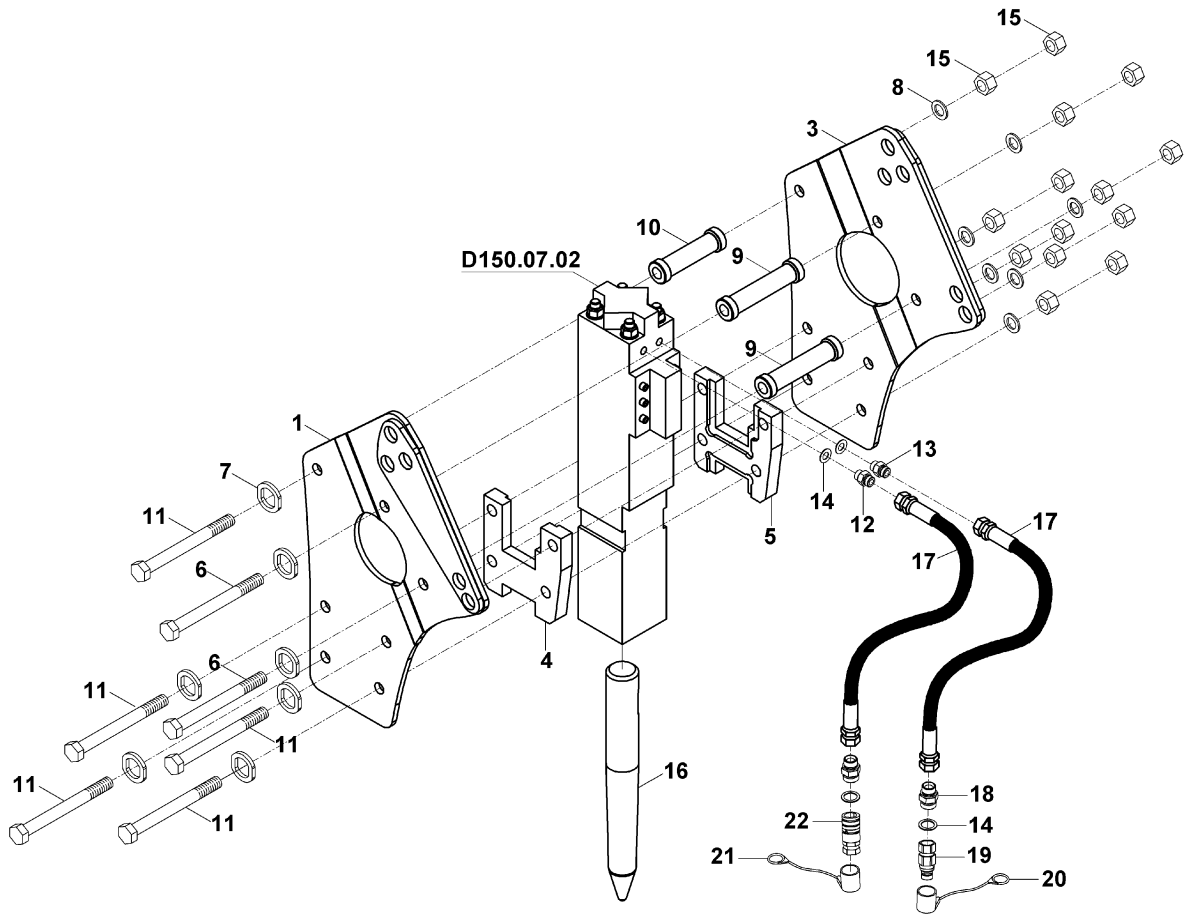

KIRICI KOMPLESİ (TOKU TNB 6M)
BREAKER ASSEMBLY (TOKU TNB 6M)

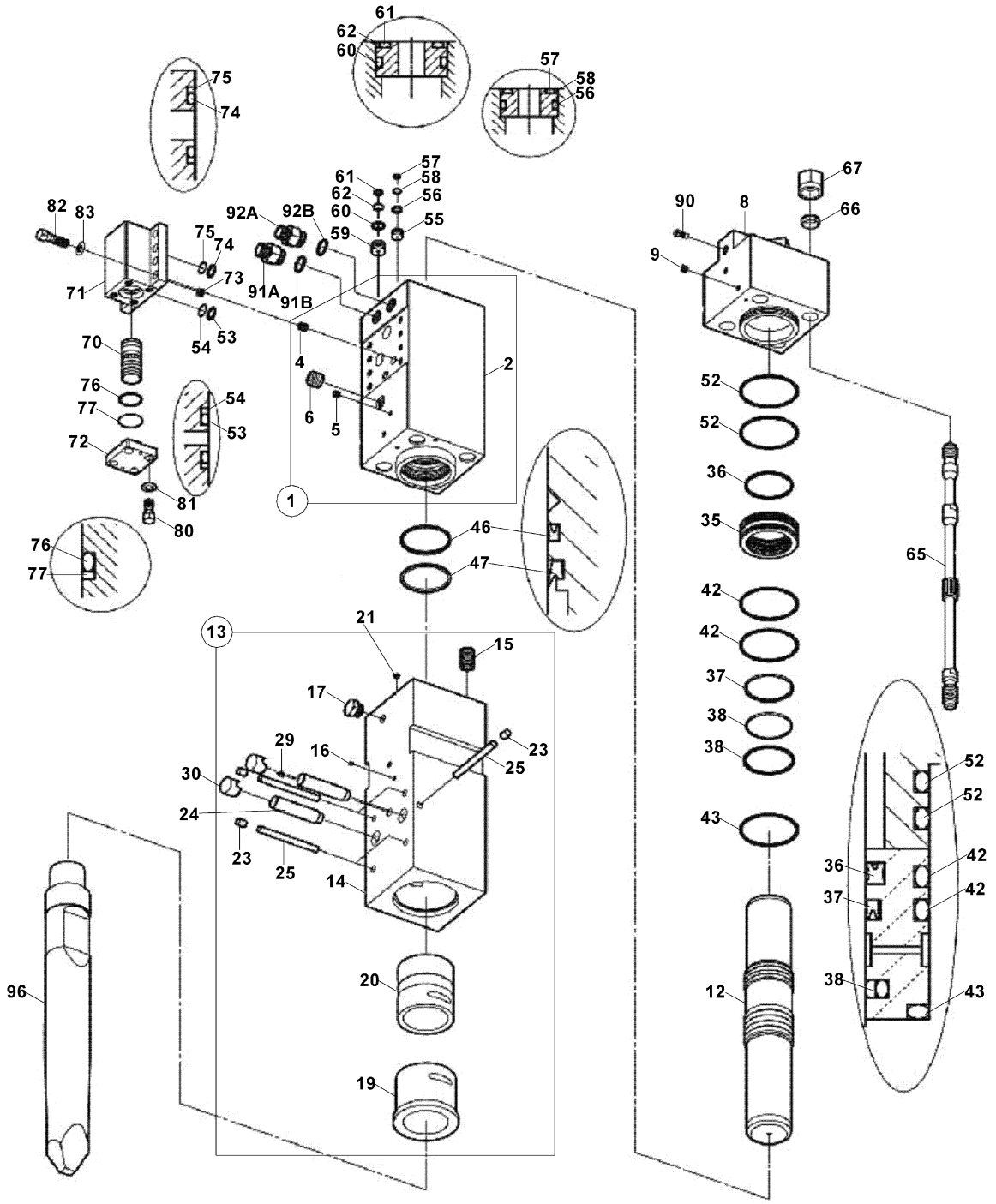

KIRICI KOMPLESİ (TOKU TNB 6M)
BREAKER ASSEMBLY (TOKU TNB 6M)

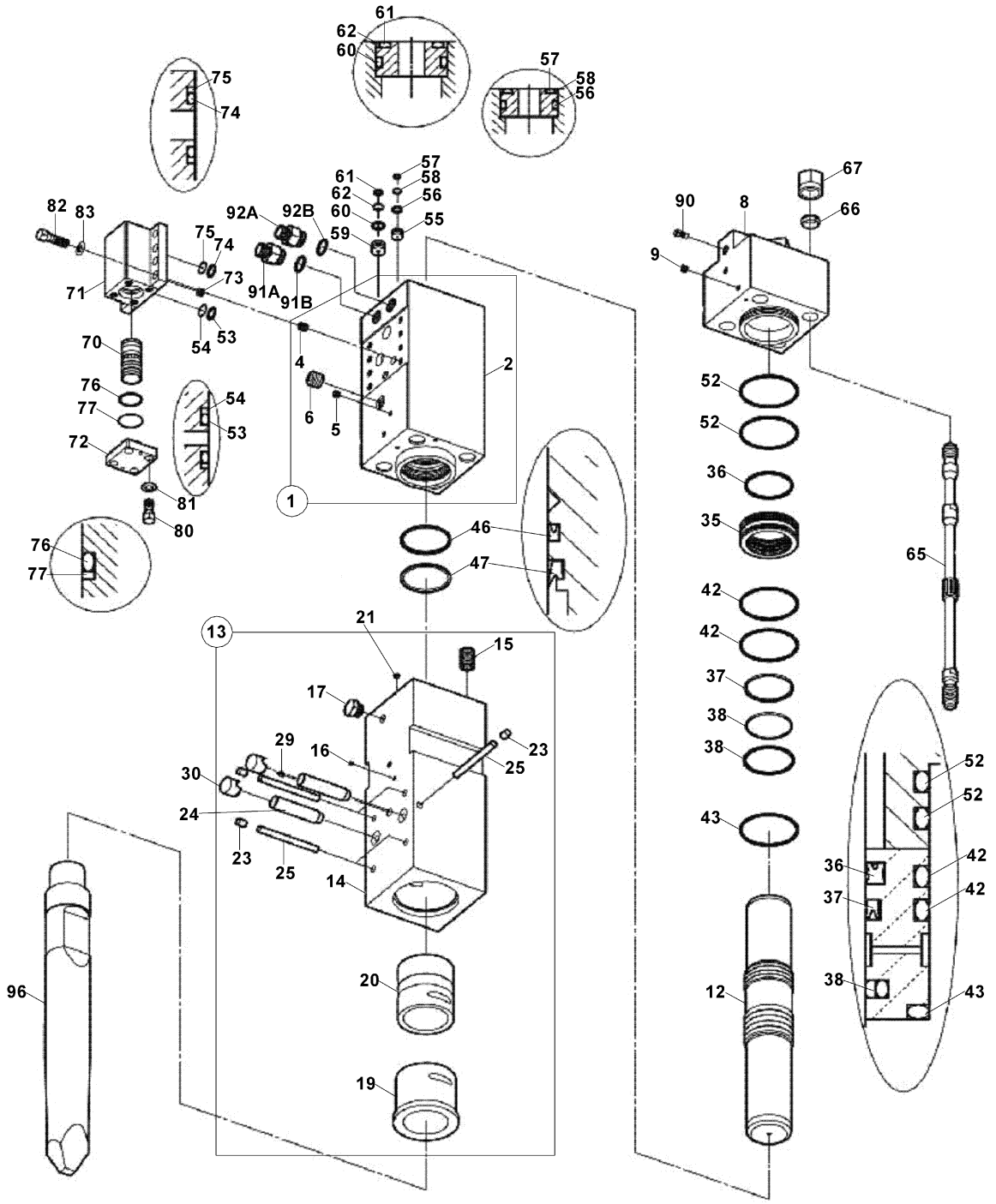

KIRICI MONTAJI (MONTABERT-140)
BREAKER MOUNTING (MONTABERT-140)

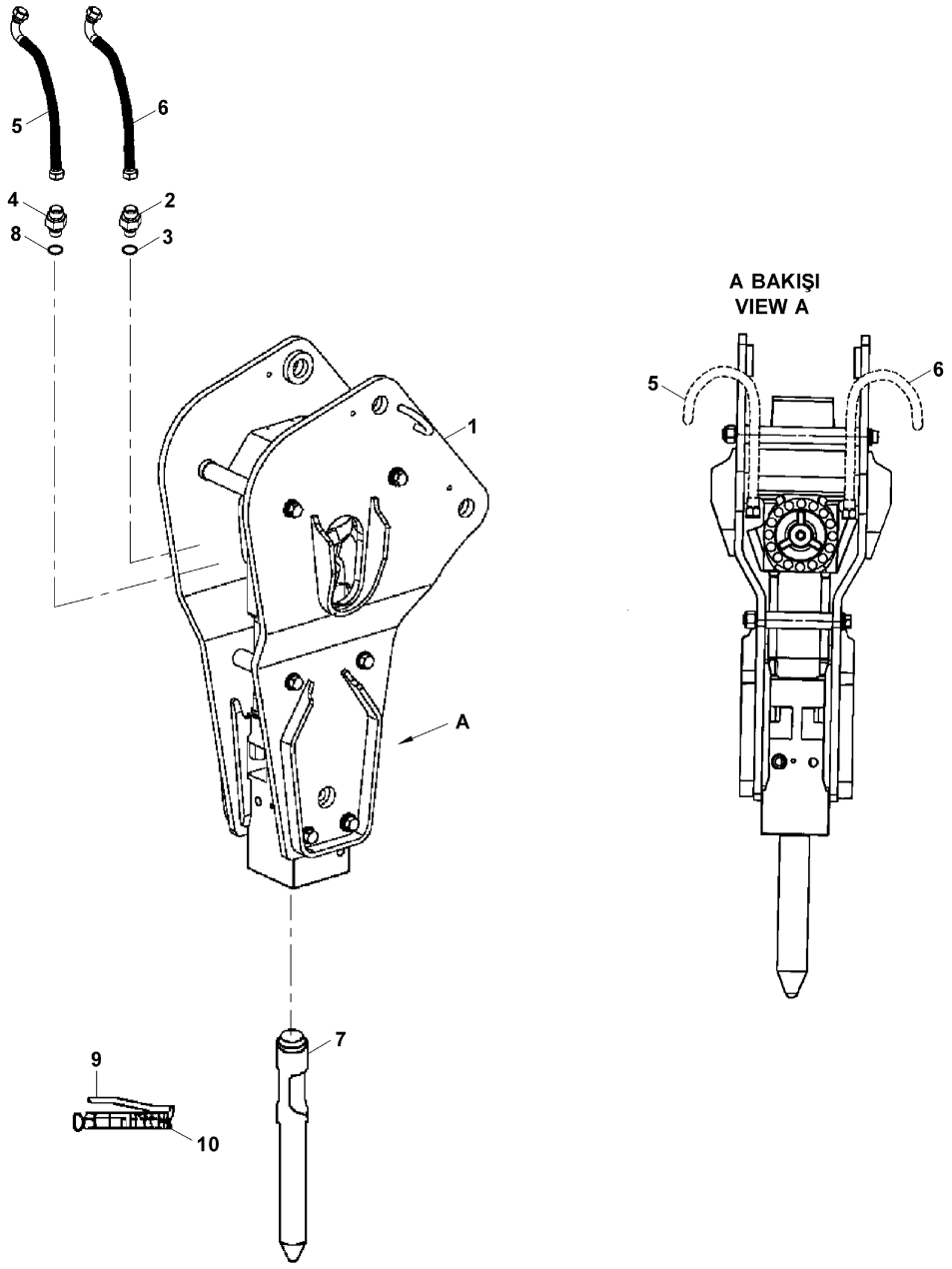

KIRICI KOMPLESİ (MONTABERT-140)
BREAKER ASSEMBLY (MONTABERT-140)

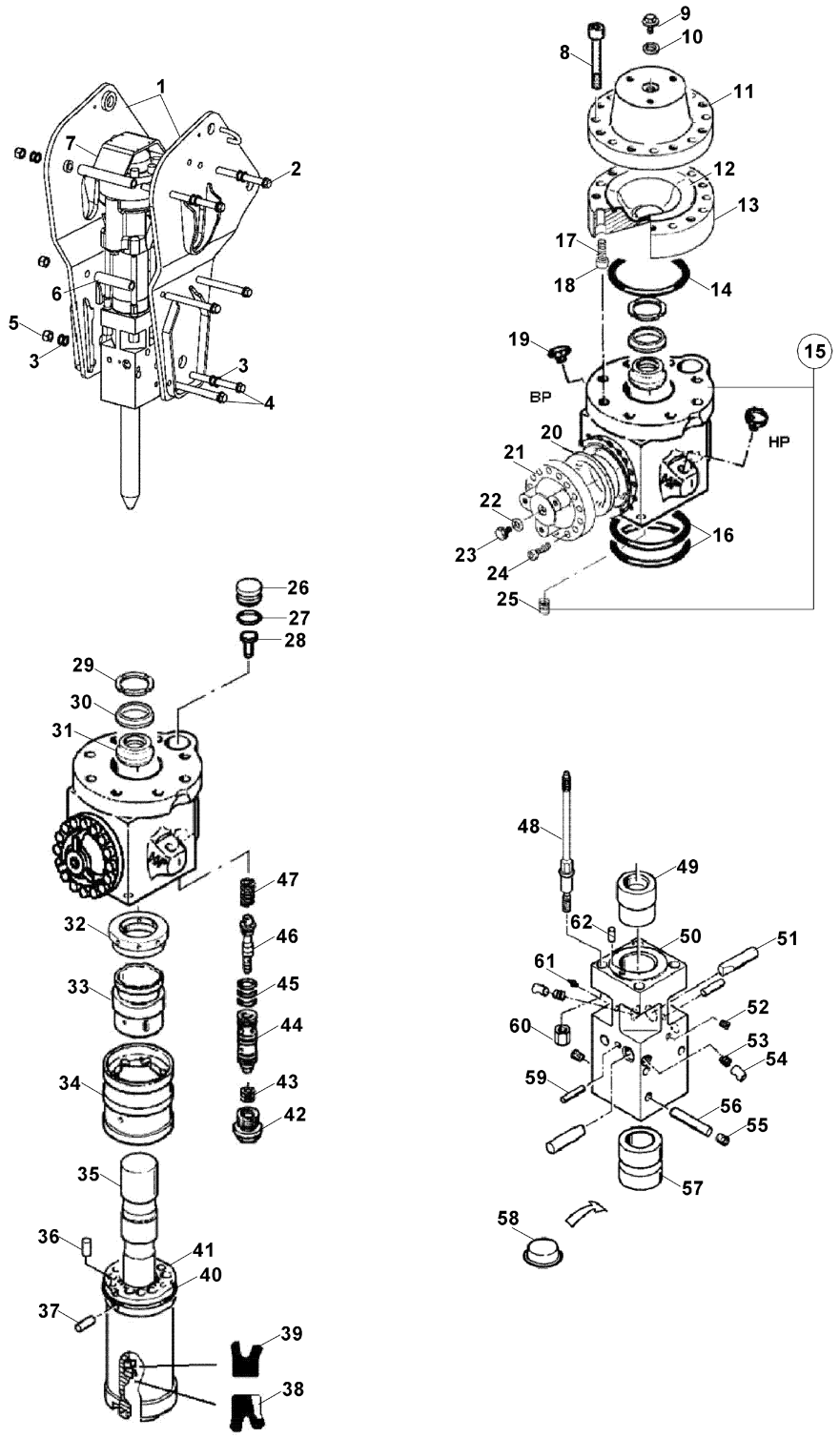

KIRICI KOMPLESİ (MONTABERT-140)
BREAKER ASSEMBLY (MONTABERT-140)

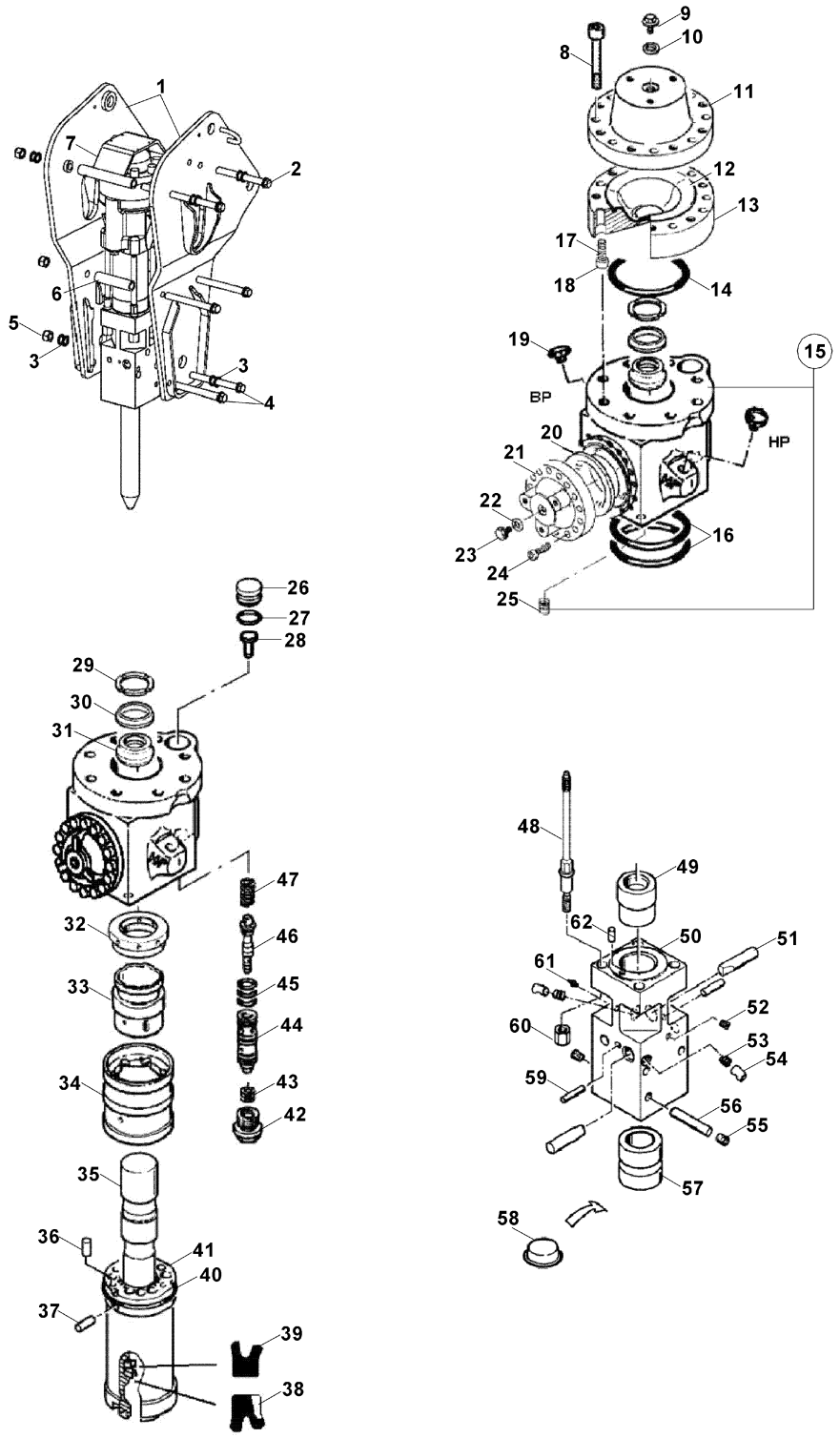

KIRICI MONTAJI (MONTABERT-95)
BREAKER MOUNTING (MONTABERT-95)

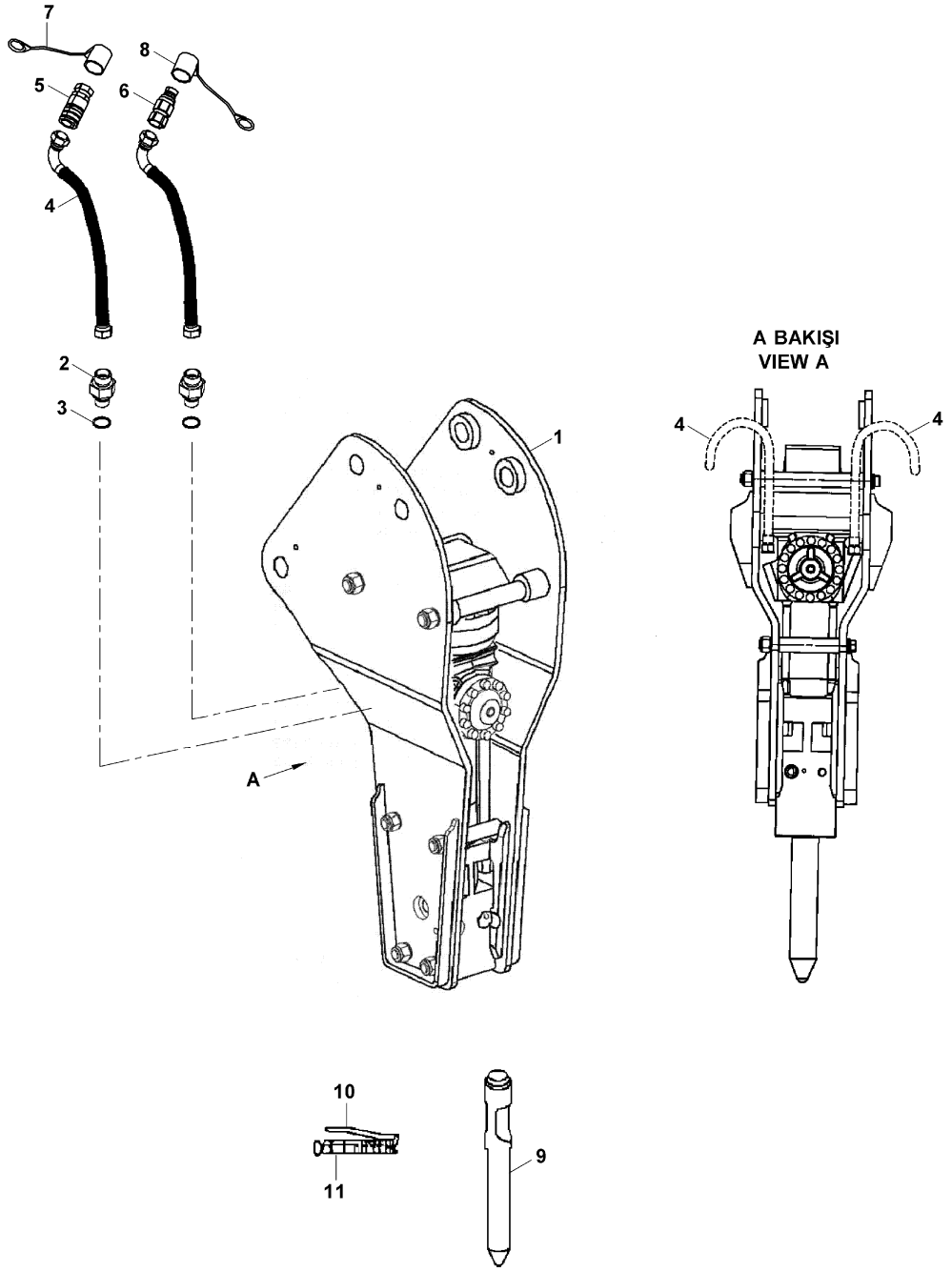

KIRICI KOMPLESİ (MONTABERT- 95)
BREAKER ASSEMBLY (MONTABERT- 95)

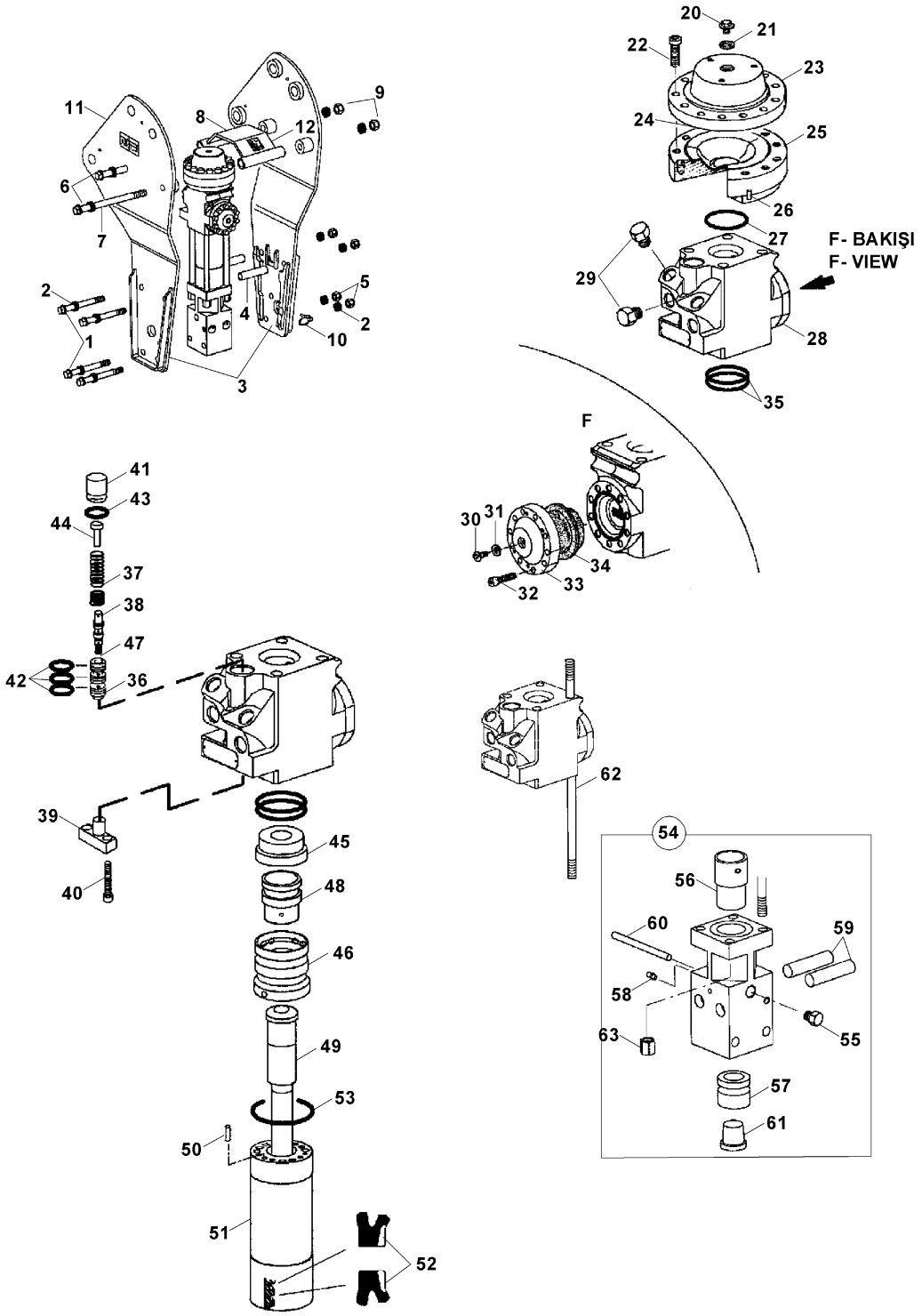

KIRICI KOMPLESİ (MONTABERT- 95)
BREAKER ASSEMBLY (MONTABERT- 95)

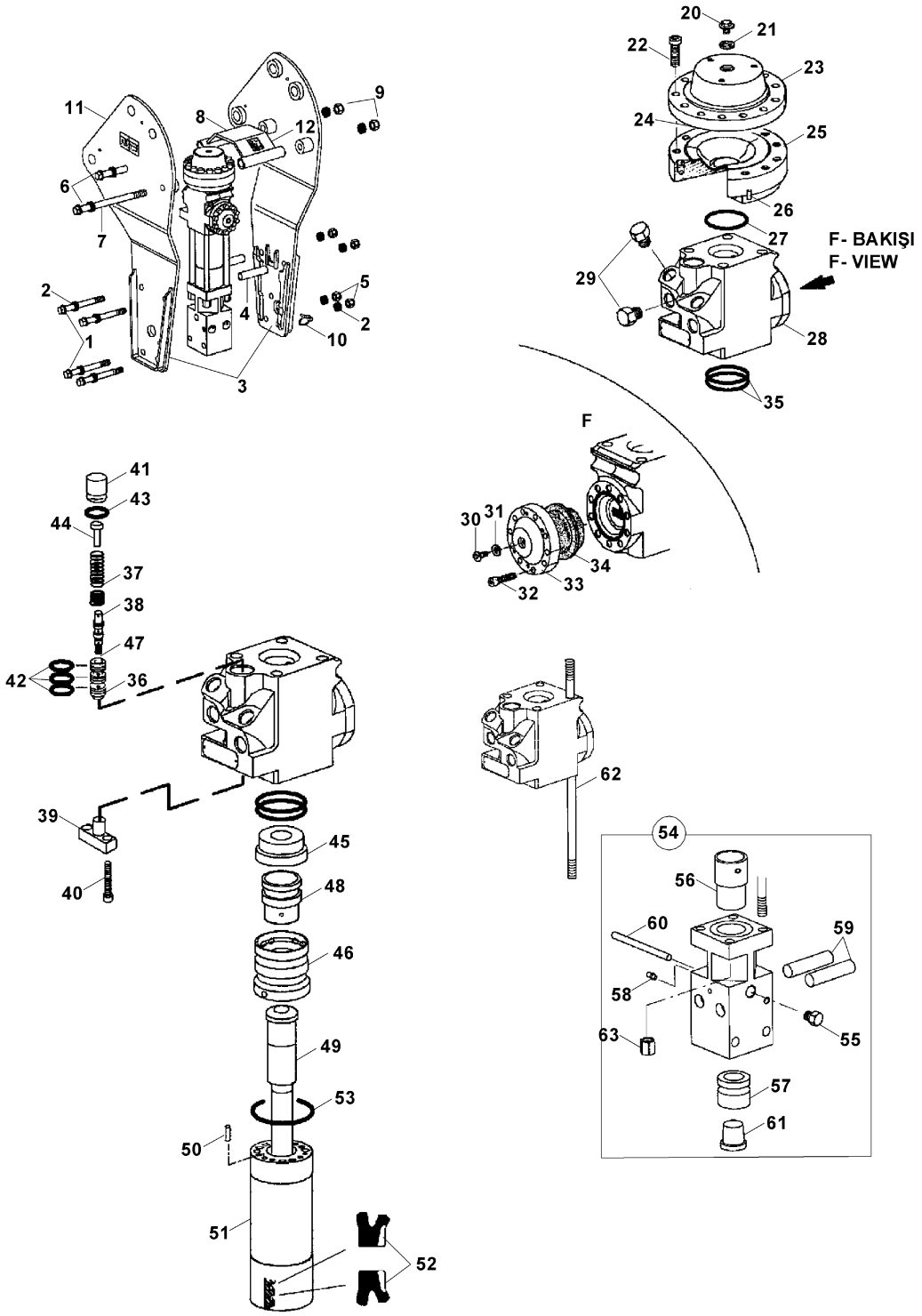

KIRICI MONTAJI (DEMO S700V)
BREAKER MOUNTING (DEMO S700V)

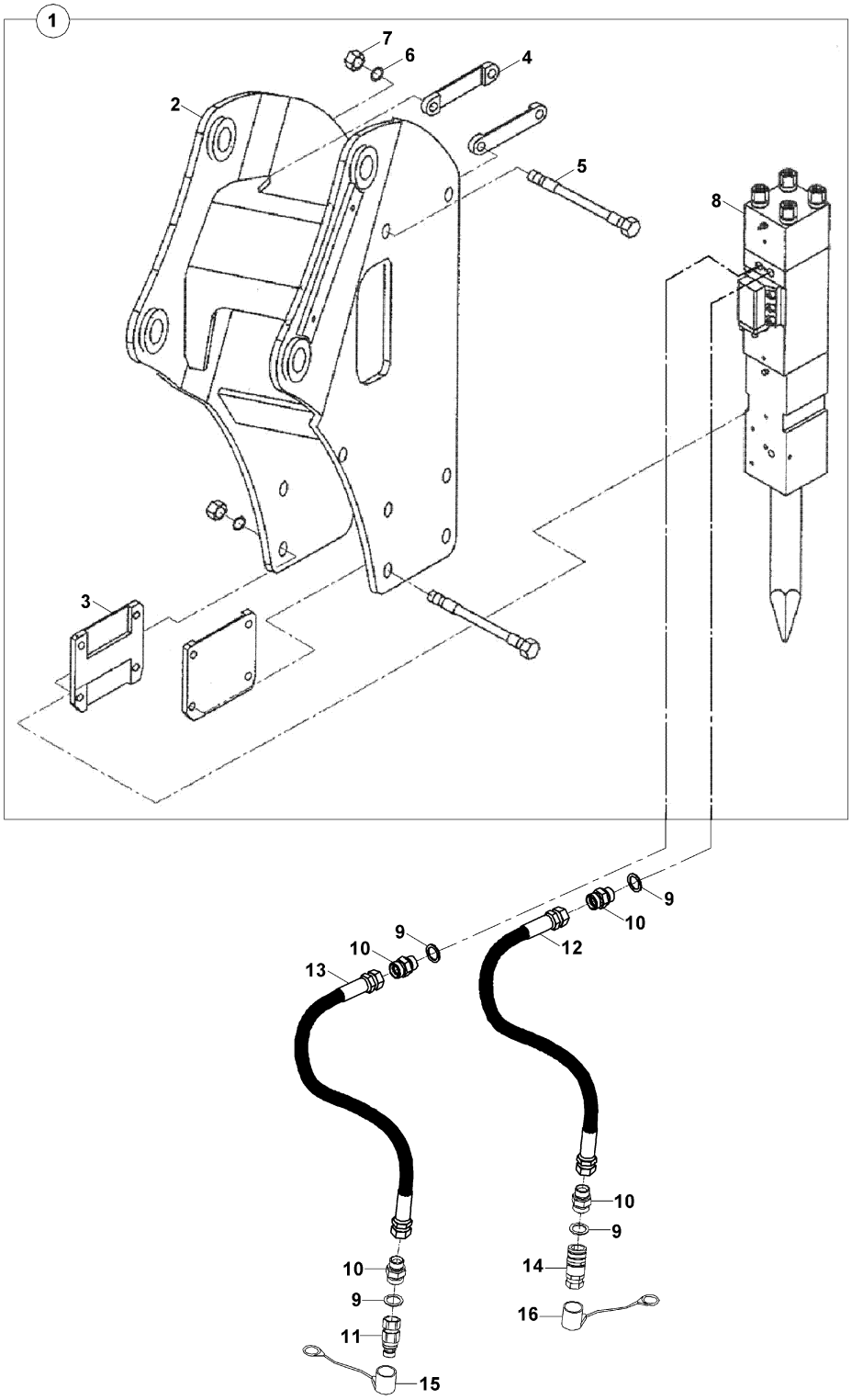

KIRICI KOMPLESİ (DEMO S700V)
BREAKER ASSEMBLY (DEMO S700V)

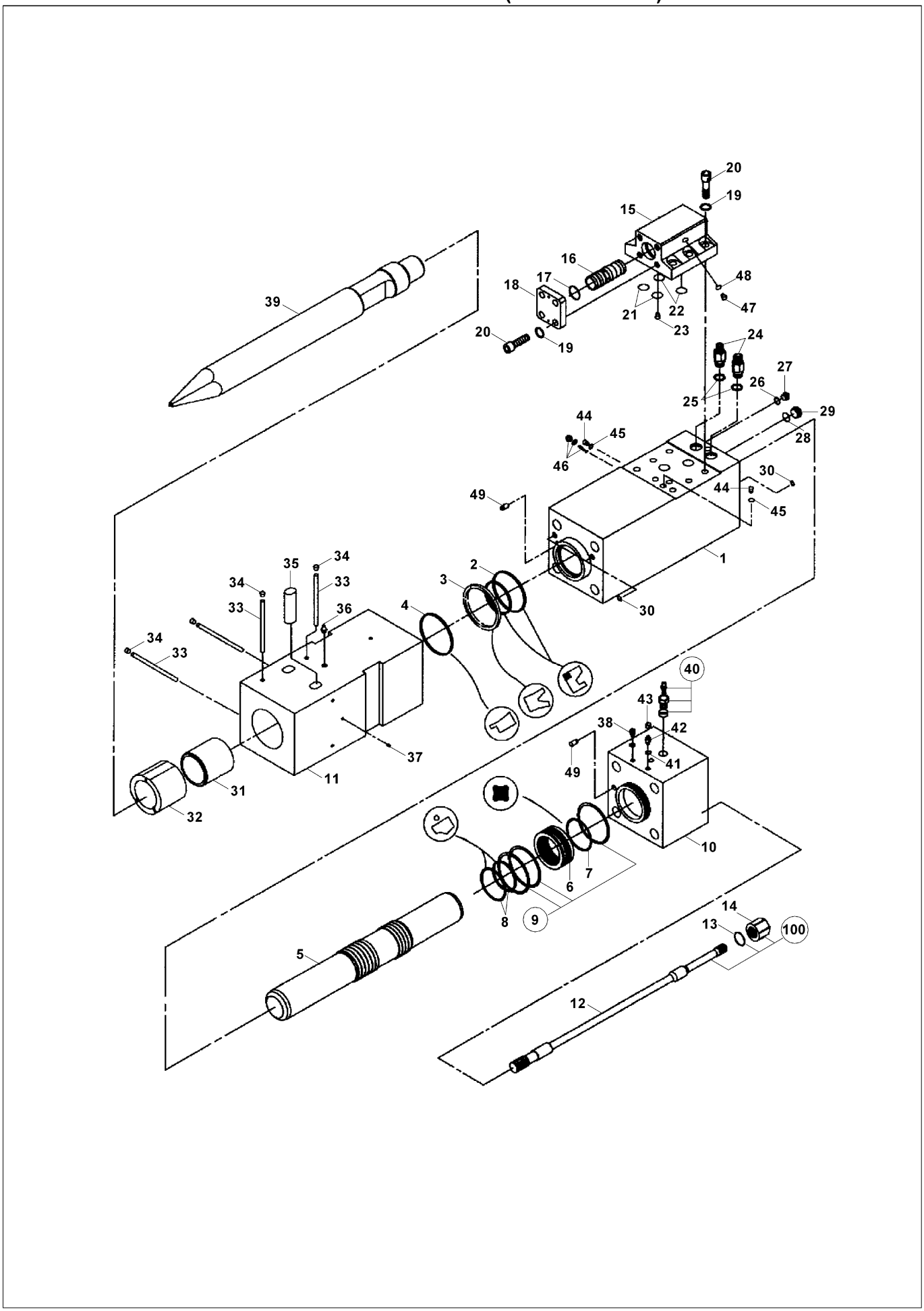

KIRICI KOMPLESİ (DEMO S700V)
BREAKER ASSEMBLY (DEMO S700V)

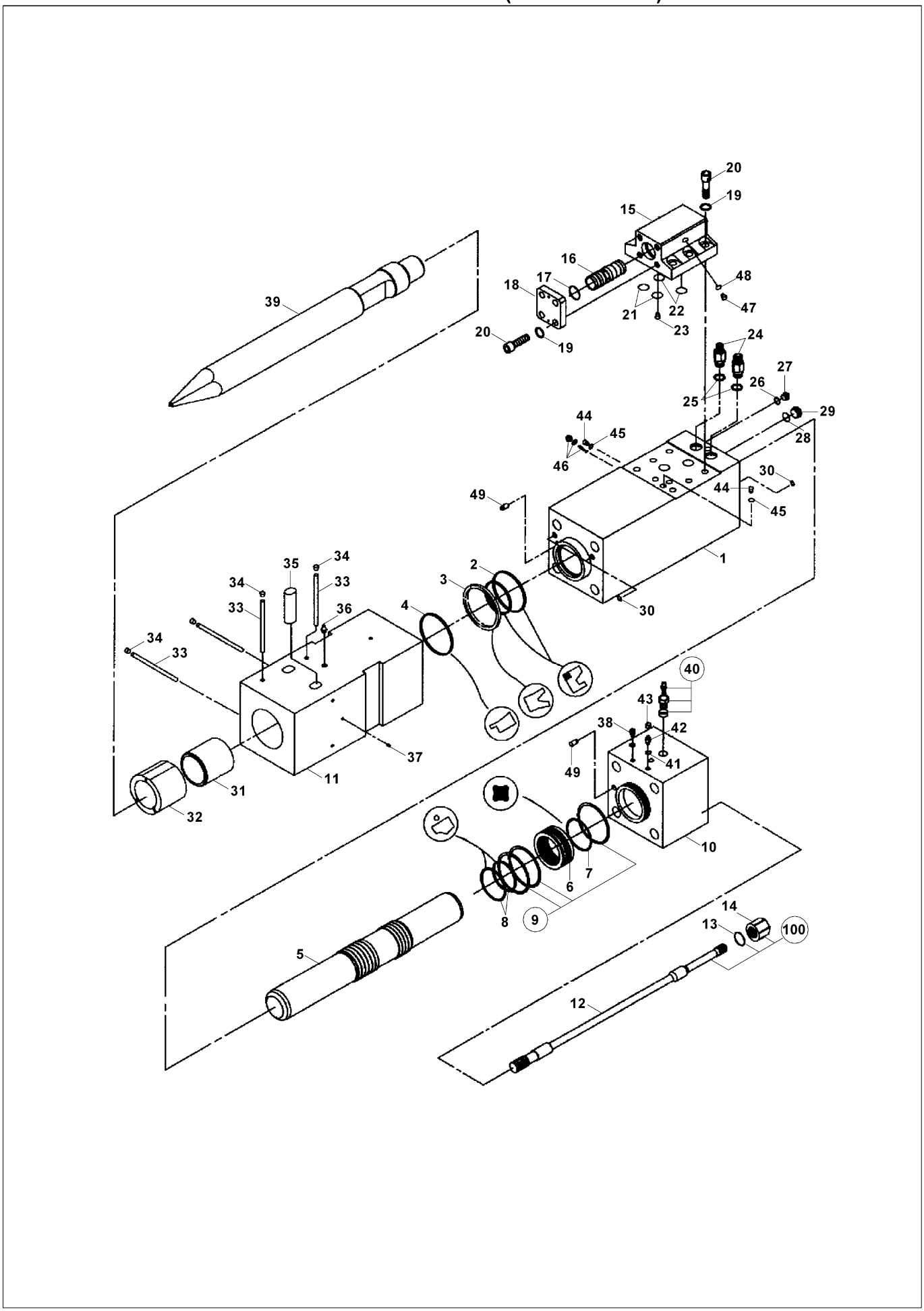

BURGU (Ø350x1000)
AUGER (Ø350x1000)

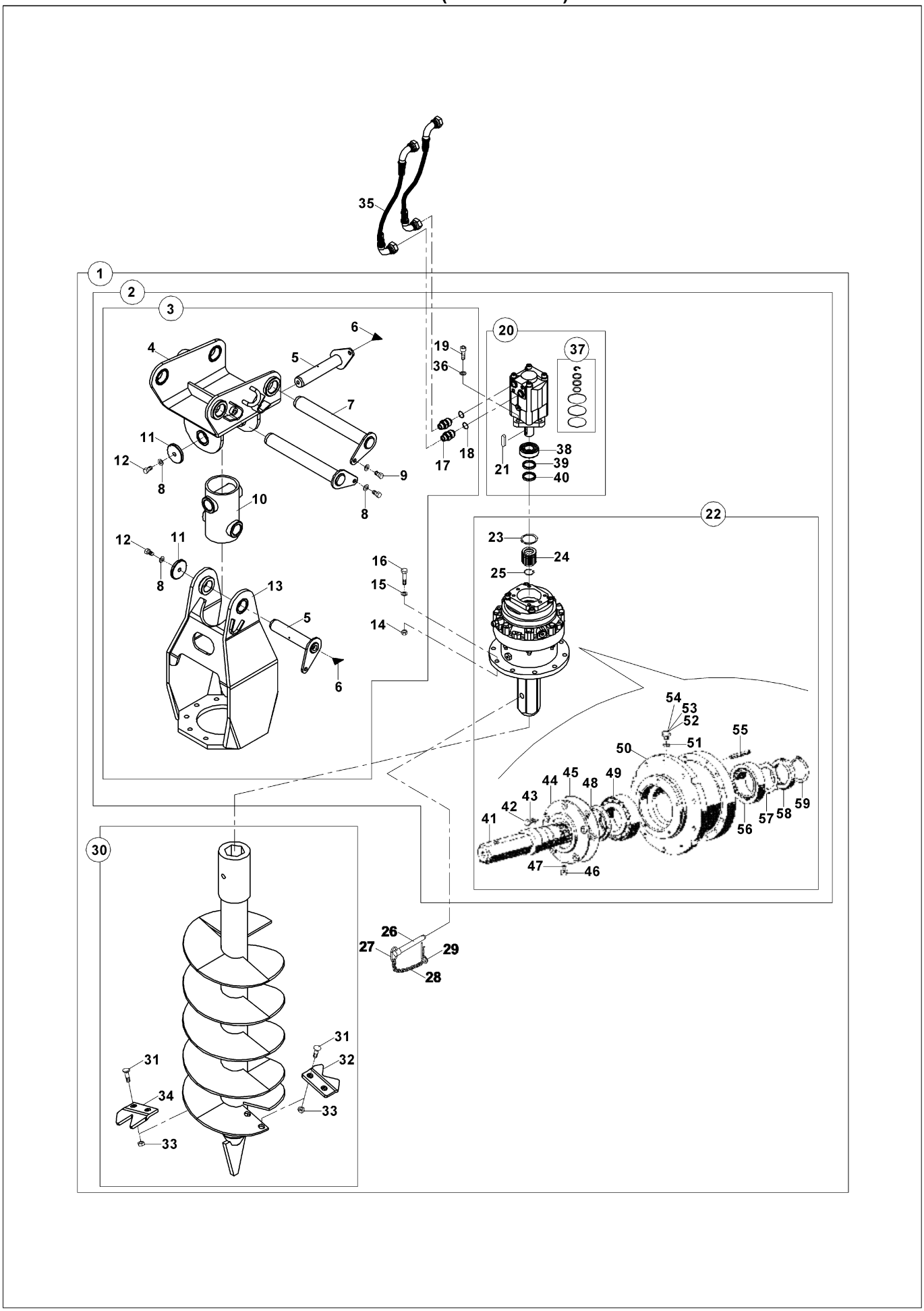

BURGU (Ø350x1000)
AUGER (Ø350x1000)

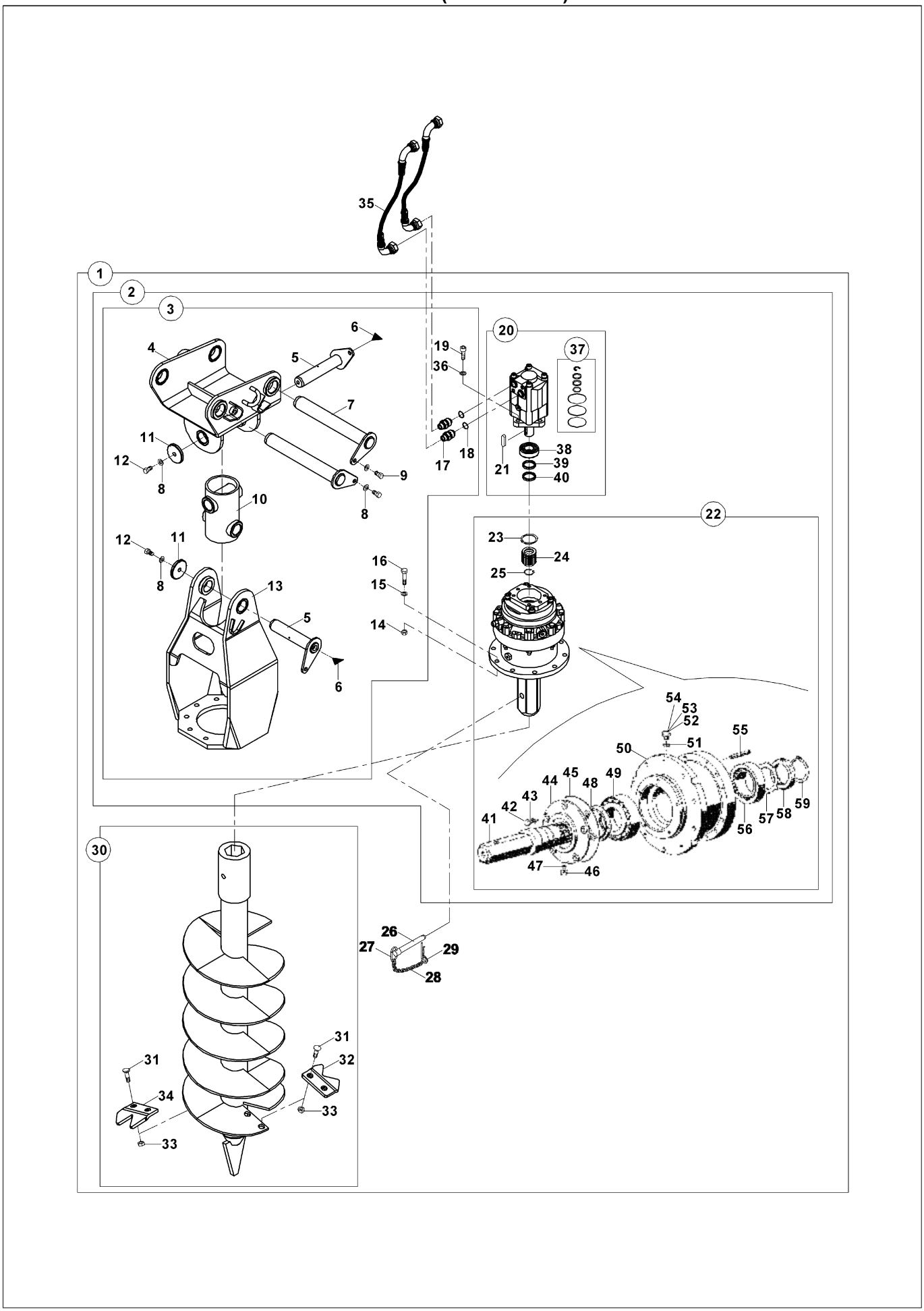

BURGU (Ø500x1300)
AUGER (Ø500x1300)

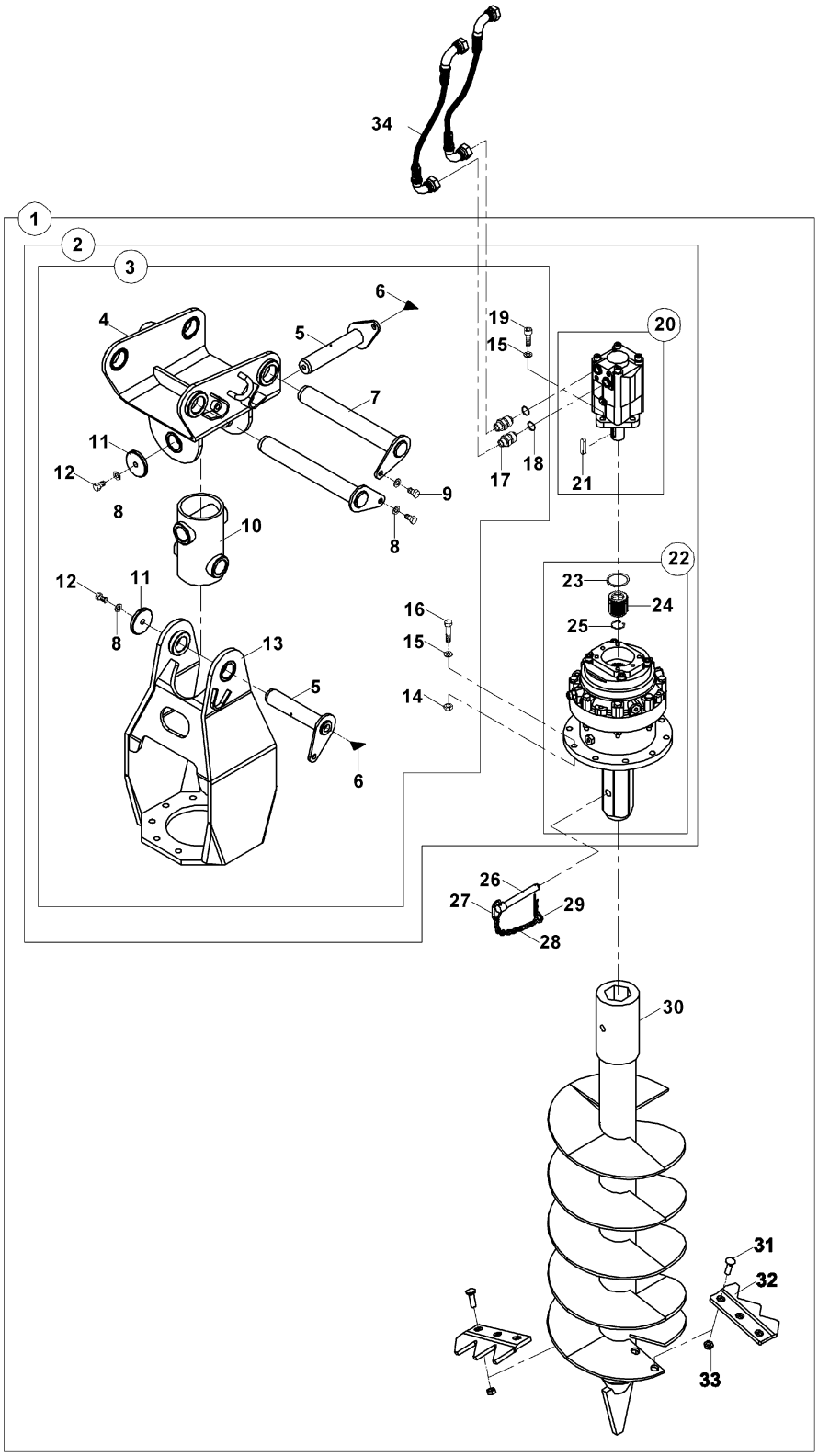

BURGU (Ø610x1600)
AUGER (Ø610x1600)

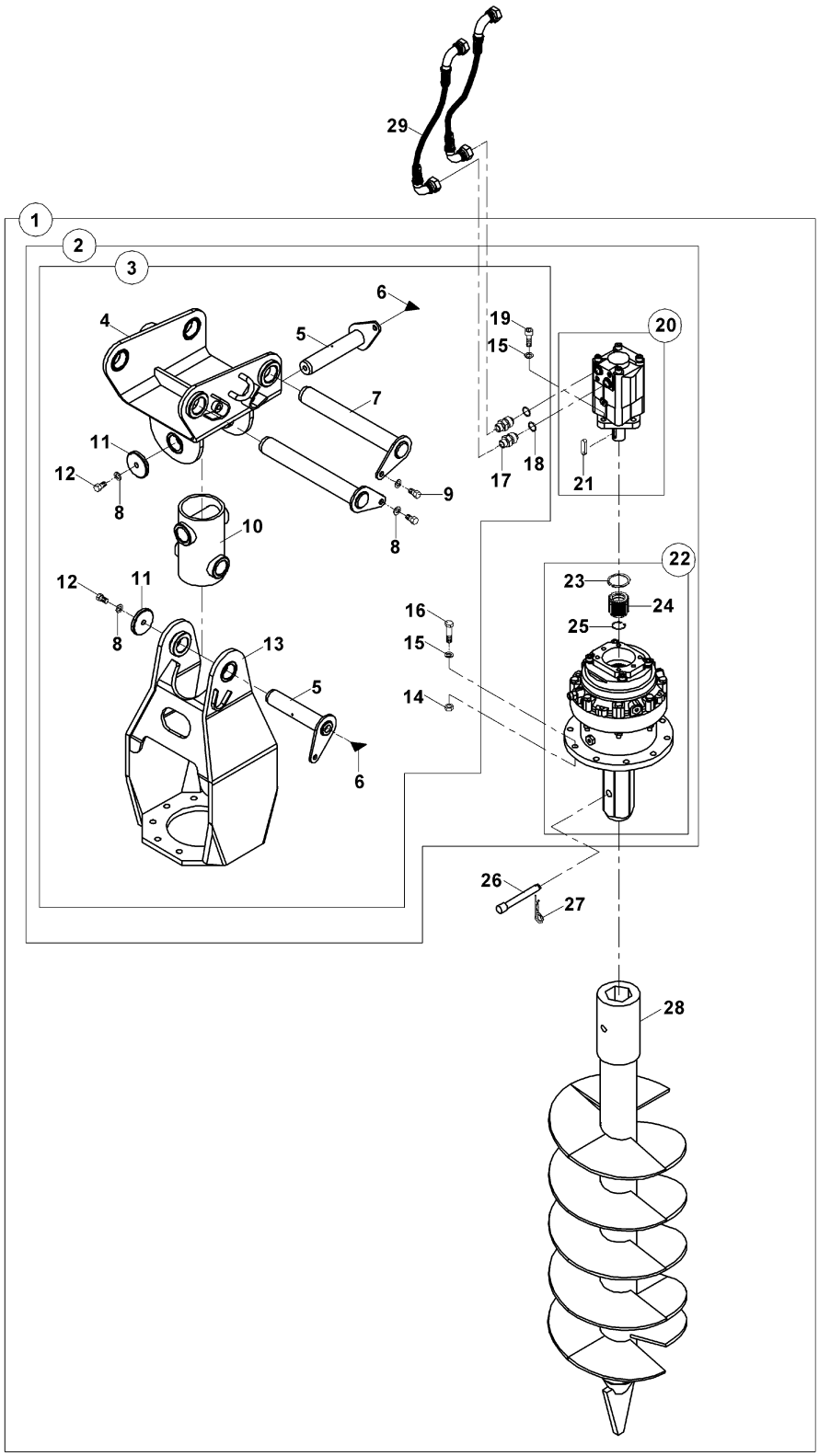

RİPER
RIPPER

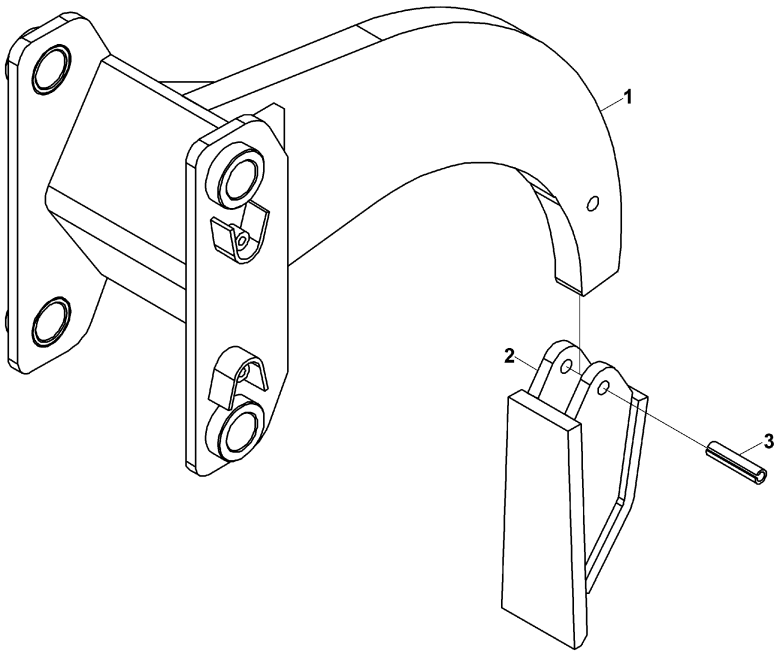

GÜÇ AKTARMA MONTAJI
POWER TRAIN MOUNTING

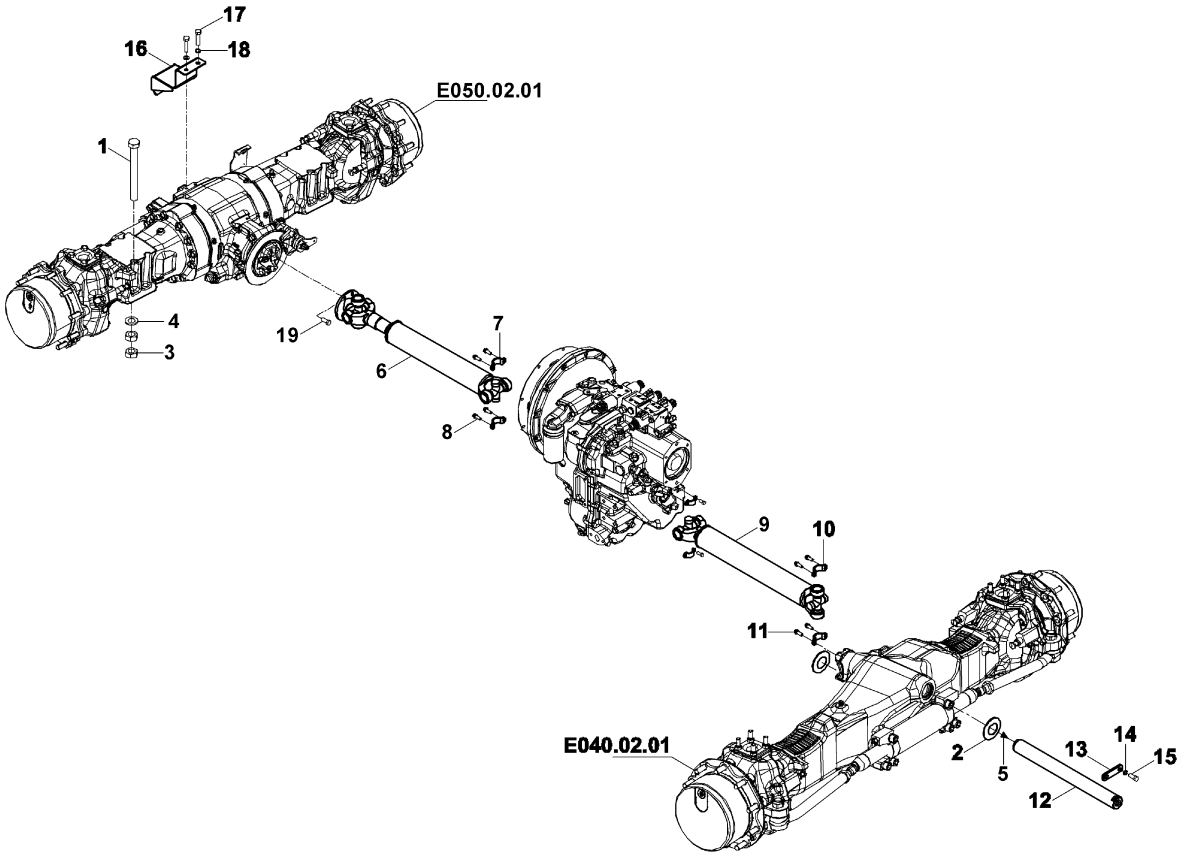

TEKER VE LASTİK GRUBU, ÖN
WHELL & TIRE GROUP, FRONT

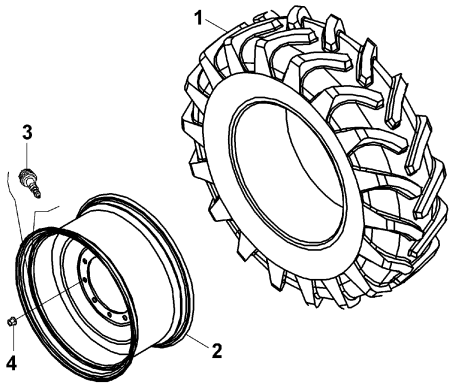

TEKER VE LASTİK GRUBU
WHELL & TIRE GROUP

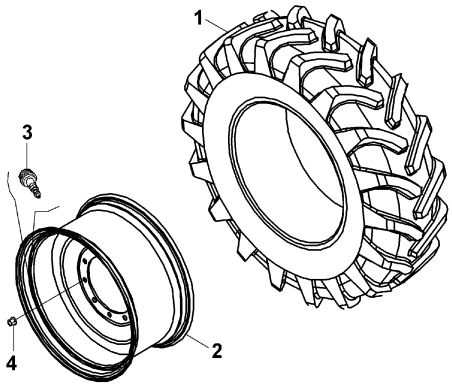

ÖN AKS
FRONT AXLE

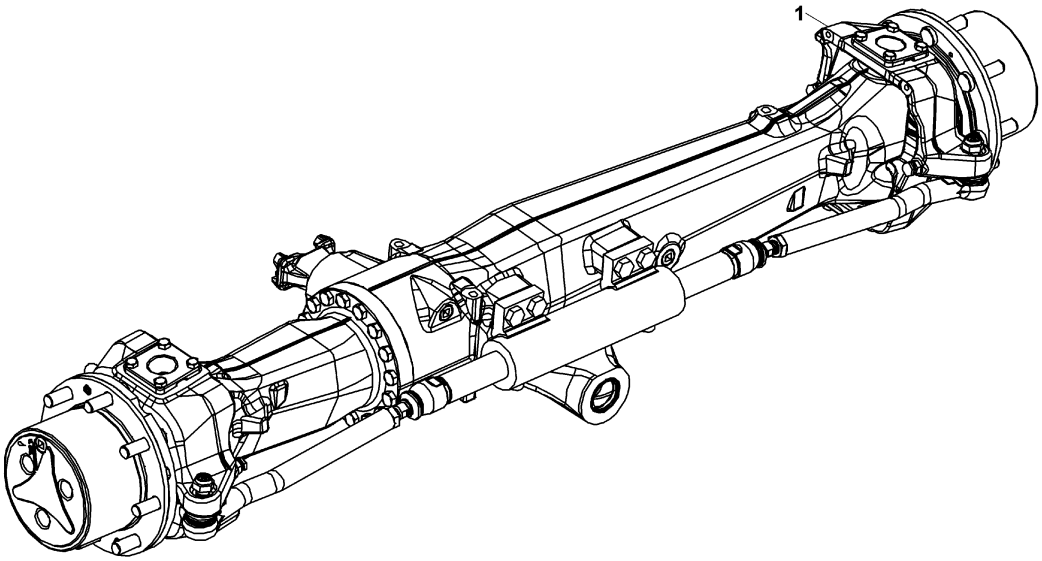

ÖN AKS, AYNA MAHRUTİ - CR (TURNER)
FRONT AXLE, BEVEL GEAR SET - CR (TURNER)

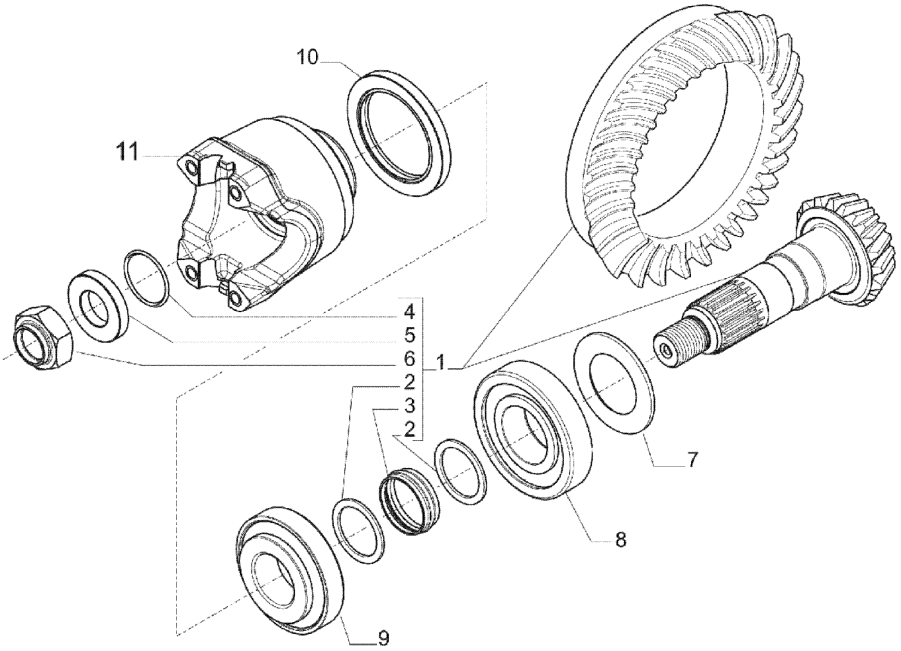

ÖN AKS, ŞAFT BAĞLANTISI - CR (TURNER)
FRONT AXLE, INPUT FLANGE - CR (TURNER)

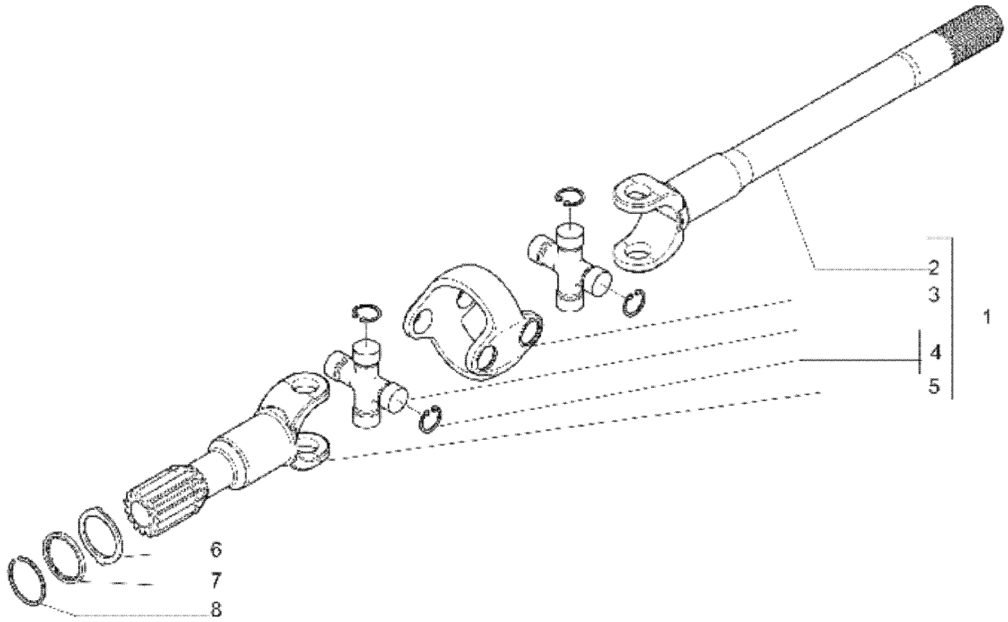

ÖN AKS, DİFERANSİYEL - CR (TURNER)
FRONT AXLE, DIFFERENTIAL - CR (TURNER)

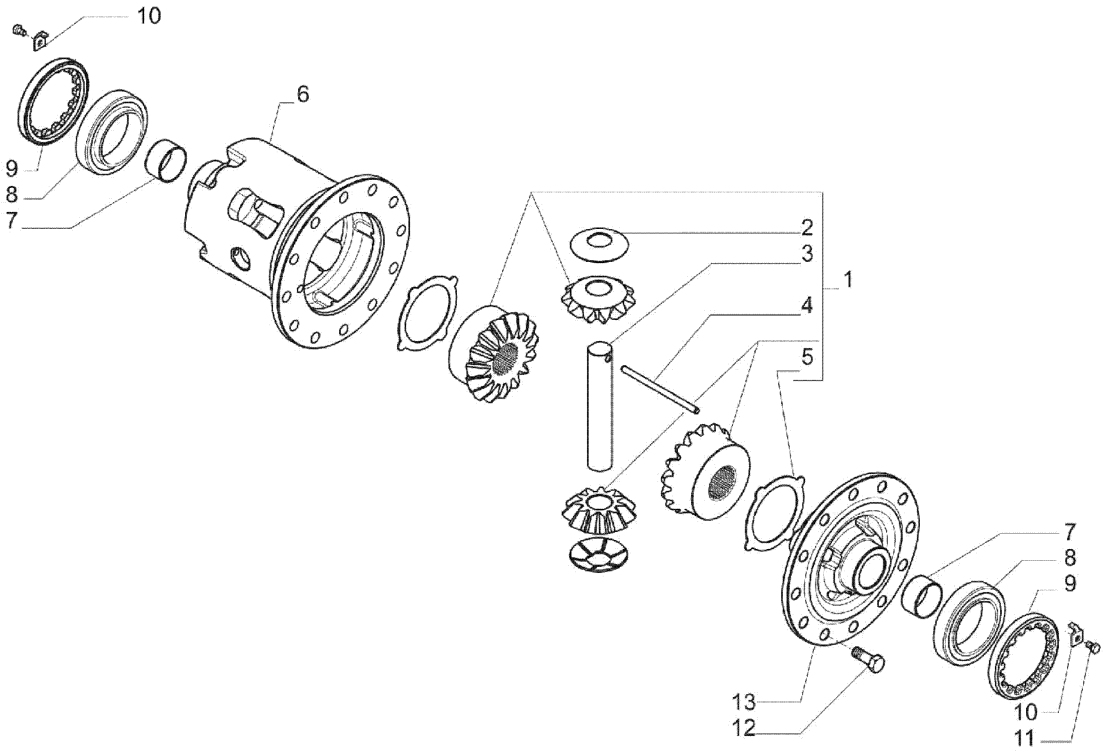

ÖN AKS, KOVAN PARÇALARI - CR (TURNER)
FRONT AXLE, AXLE CASING PARTS - CR (TURNER)

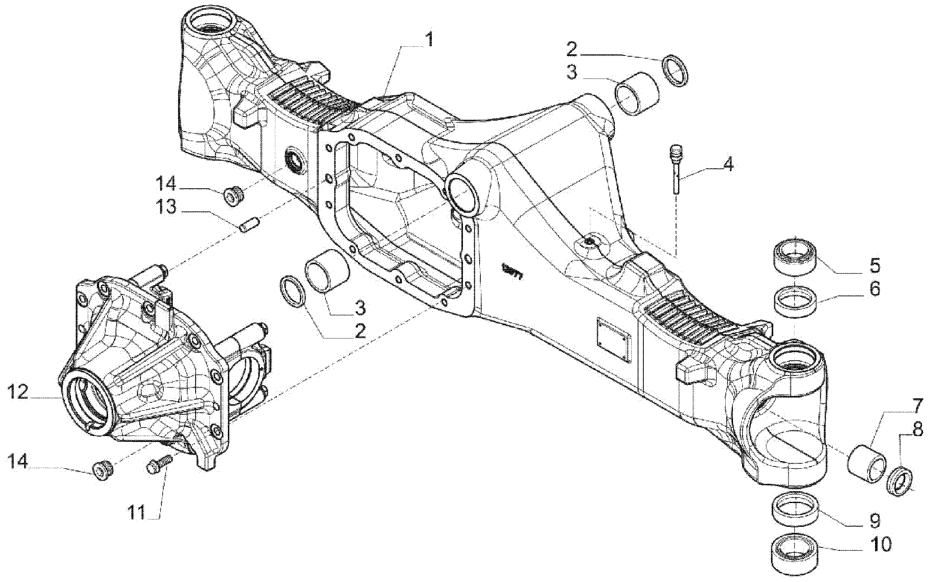

ÖN AKS, POYRA
FRONT AXLE, HUB

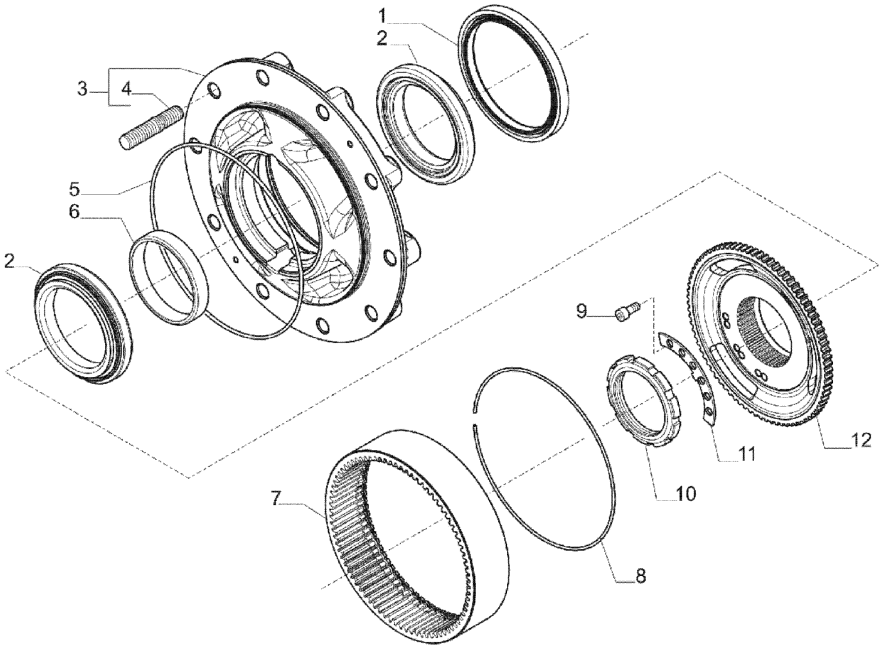

ÖN AKS, SON REDÜKSİYON
FRONT AXLE, FINAL REDUCTION

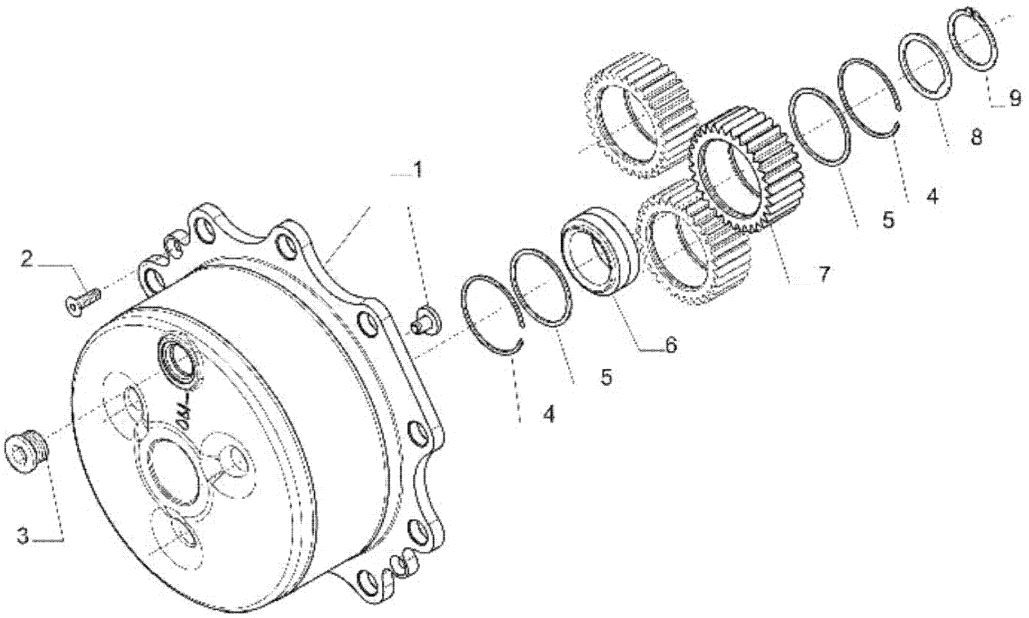

ÖN AKS, DİREKSİYON SİLİNDİRİ - CR (TURNER)
FRONT AXLE, STEERING CYLINDER- CR (TURNER)

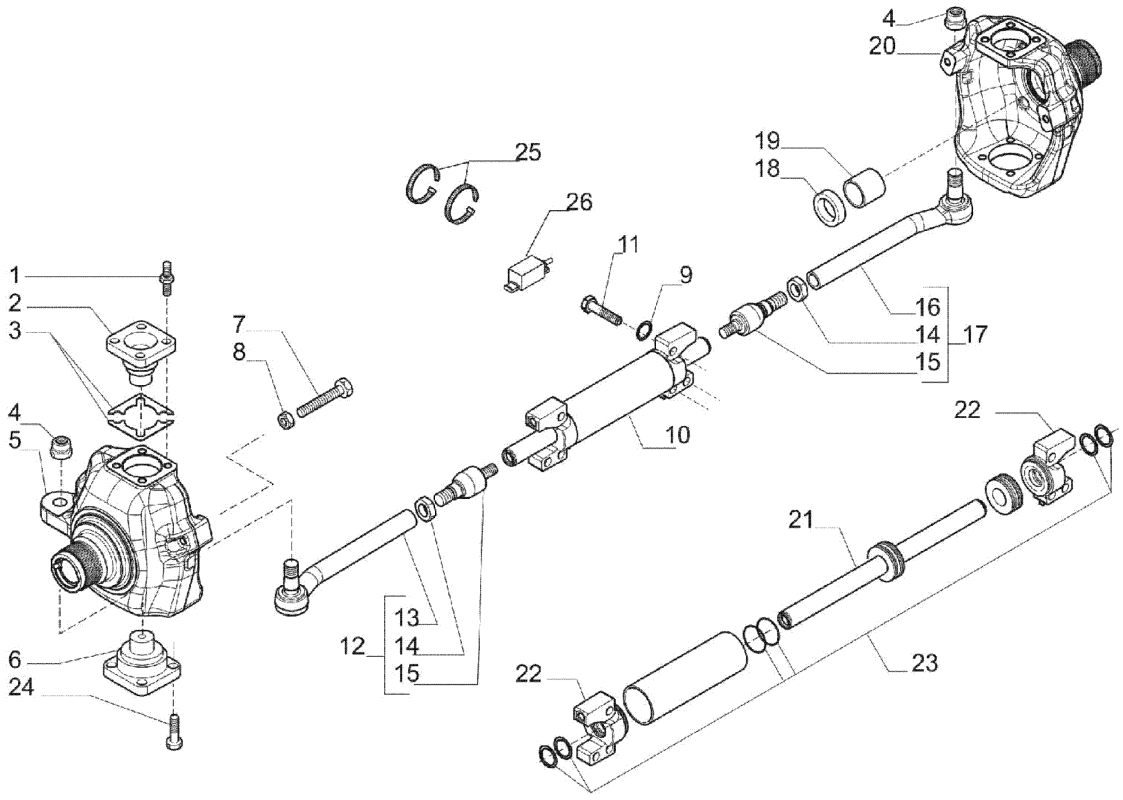

ARKA AKS - CR (TURNER)
REAR AKS - CR (TURNER)

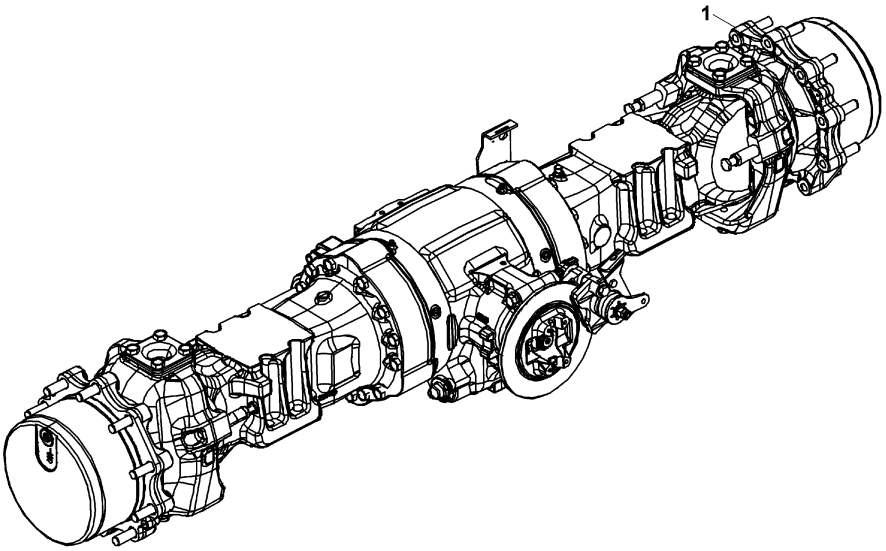

ARKA AKS, AYNA MAHRUTİ DİŞLİ SETİ - CR (TURNER)
REAR AXLE, BEVEL GEAR SET - CR (TURNER)

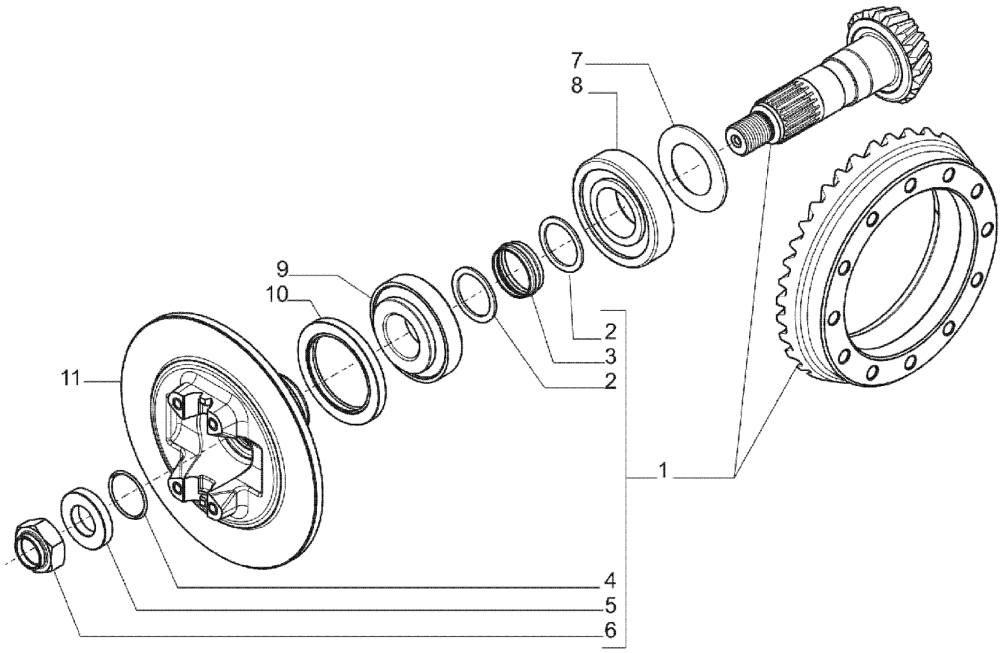

ARKA AKS, ŞAFT BAĞLANTISI - CR (TURNER)
REAR AXLE, INPUT FLANGE - CR (TURNER)

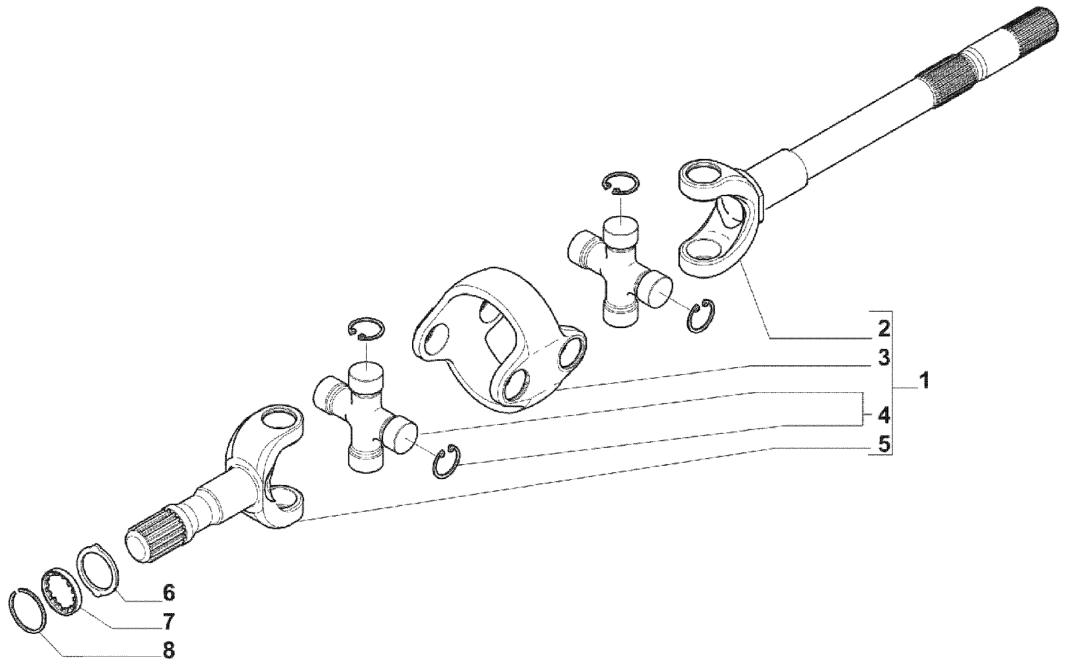

ARKA AKS, DİFERANSİYEL - CR (TURNER)
REAR AXLE, DIFFERENTIAL - CR (TURNER)

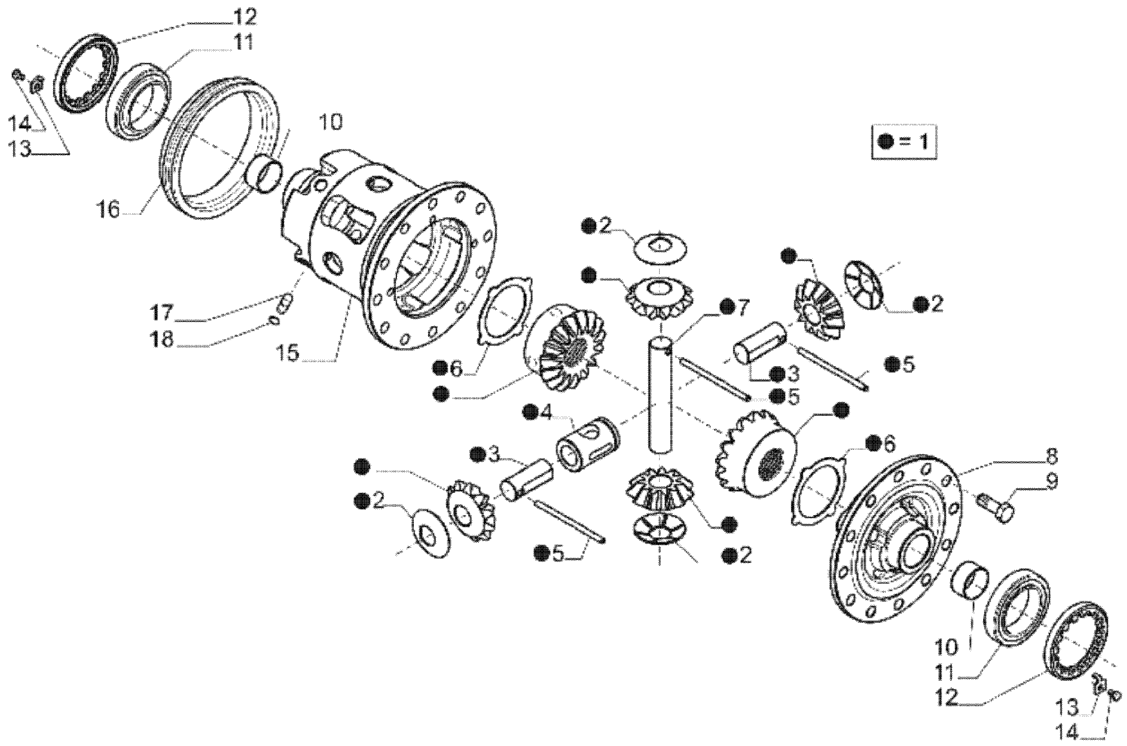

ARKA AKS, DİŞLİ ŞAFTI VE FREN - CR (TURNER)
REAR AXLE, HALF-SHAFTS AND BRAKES - CR (TURNER)

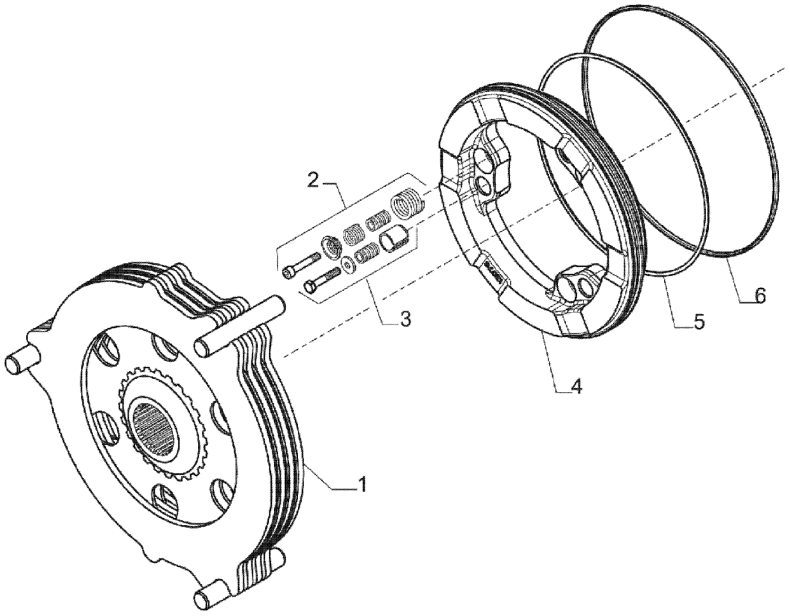

ARKA AKS, AKS GÖVDESİ - CR (TURNER)
REAR AXLE, AXLE HOUSING - CR (TURNER)

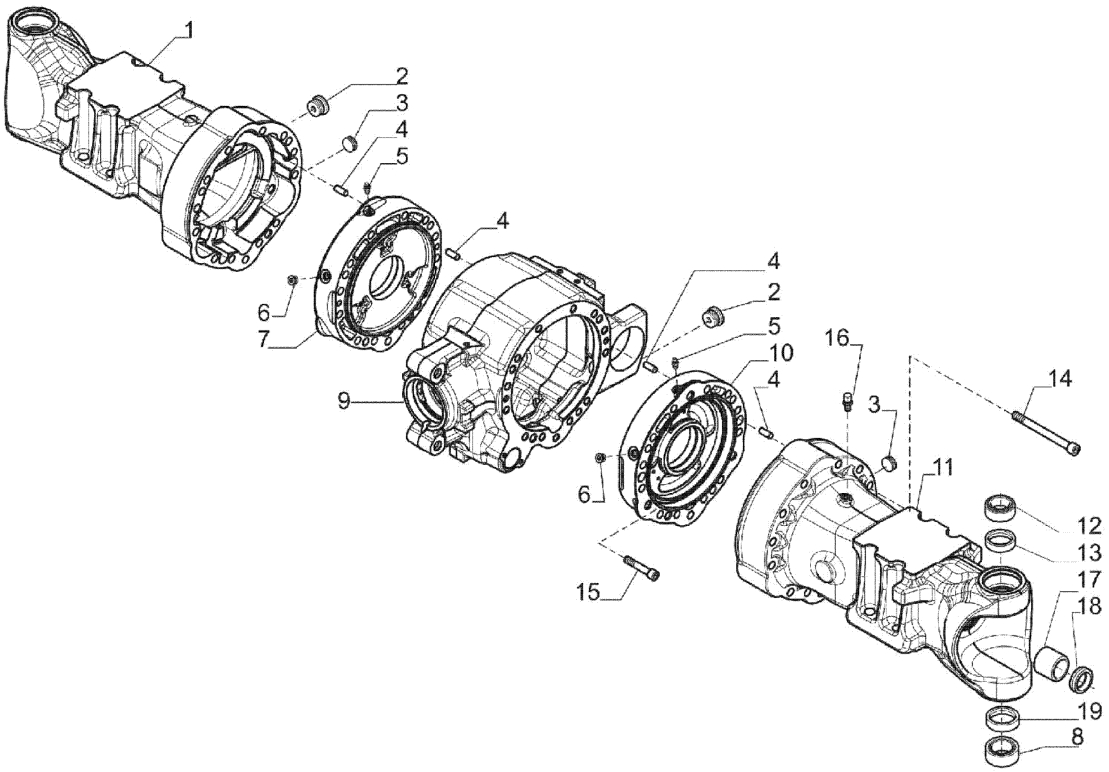

ARKA AKS, TEKERLEK GÖBEĞİ (POYRA) - CR (TURNER)
REAR AXLE, WHEEL HUB - CR (TURNER)

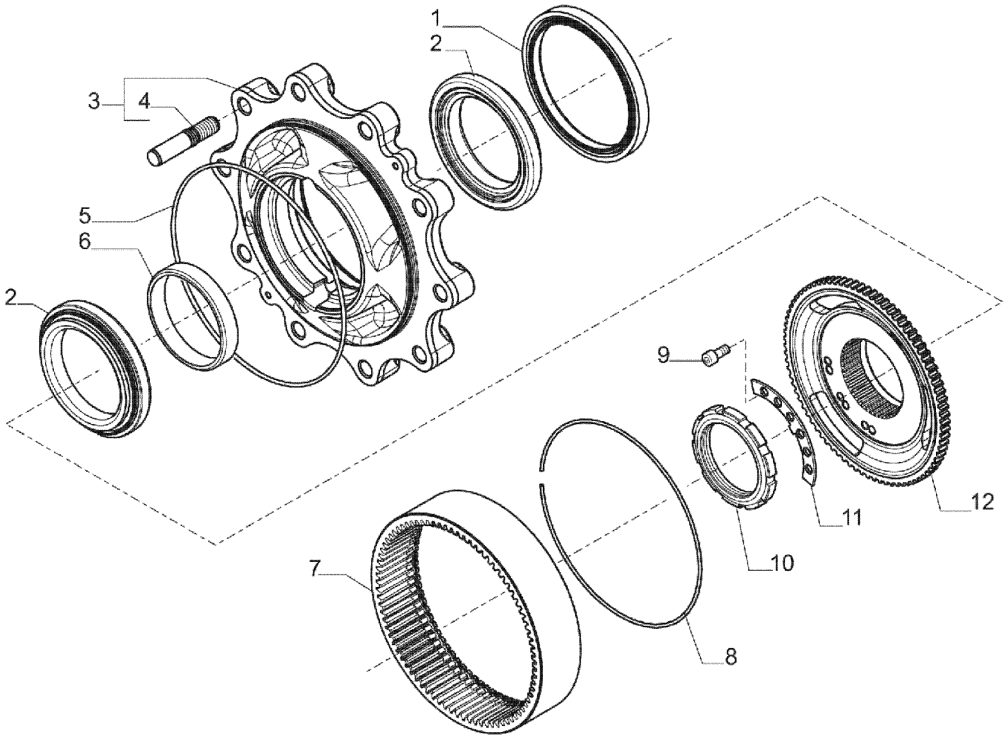

ARKA AKS, PARK FRENİ - CR (TURNER)
REAR AXLE, BRAKE CALIPER - CR (TURNER)

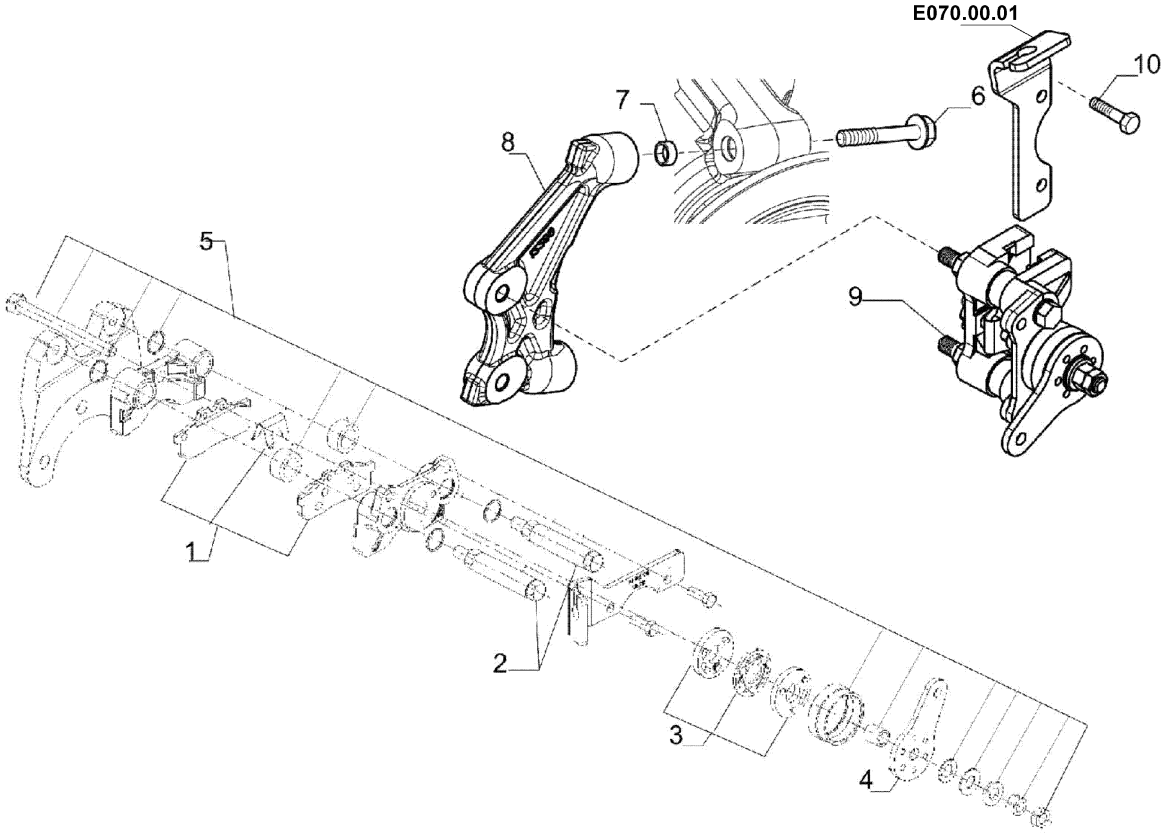

ARKA AKS, SON REDÜKSİYON - CR (TURNER)
REAR AXLE, FINAL REDUCTION - CR (TURNER)

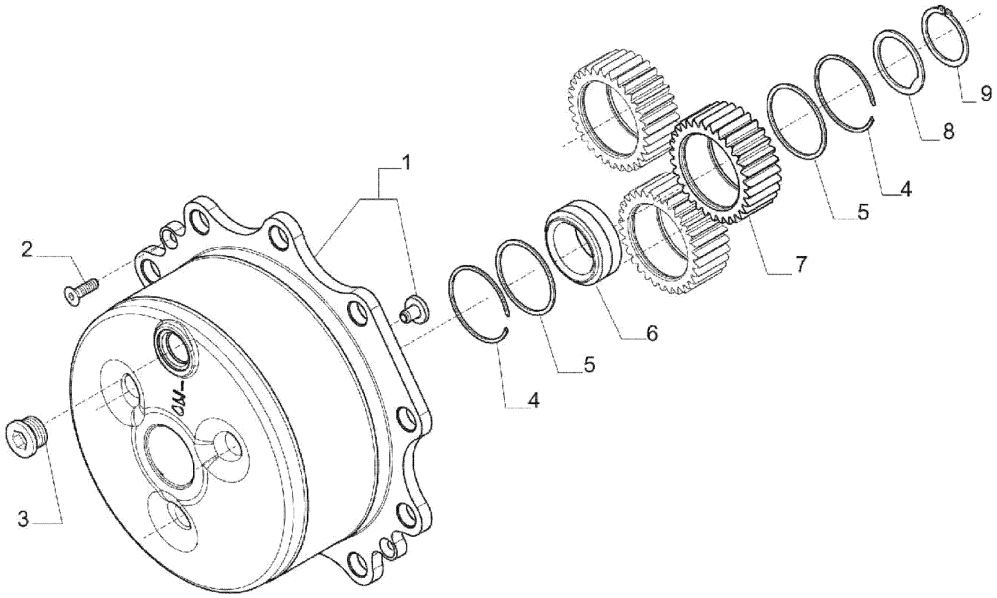

ARKA AKS, MAFSAL GÖVDESİ VE DİREKSİYON SİLİNDİRİ - CR (TURNER)
REAR AXLE, SWIVEL HOUSING AND STEERING CYLINDER - CR (TURNER)

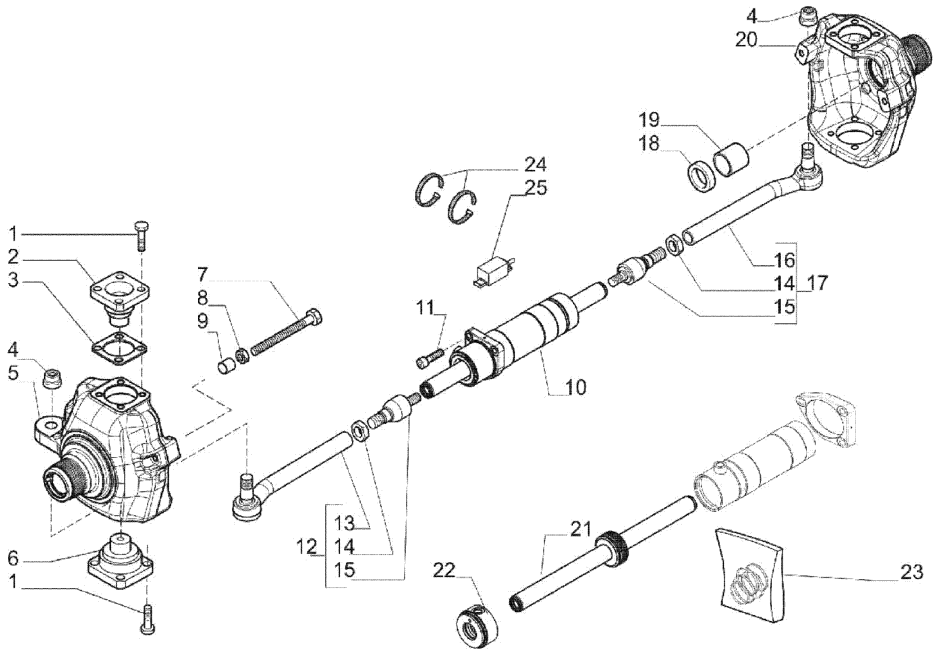

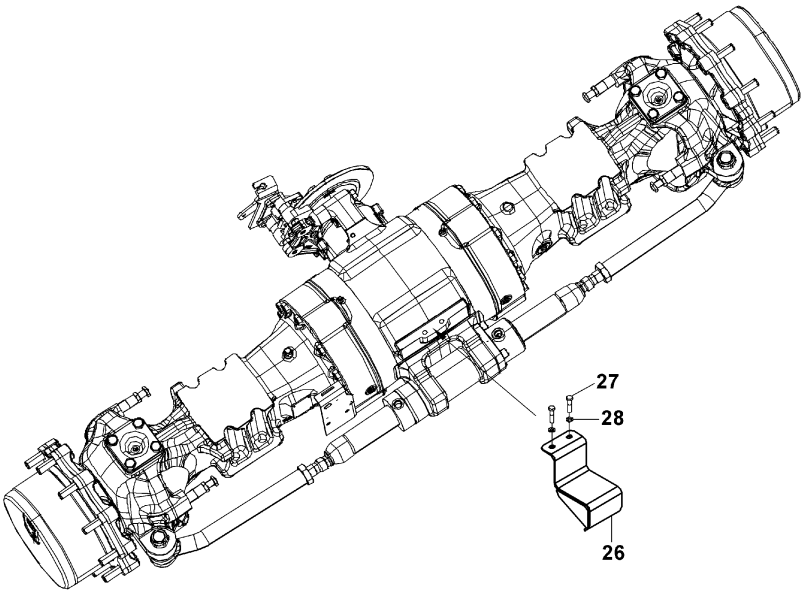

ARKA AKS, DİFERANSİYEL KİLİDİ - CR (TURNER)
REAR AXLE, DIFFERENTIAL LOCKING - CR (TURNER)

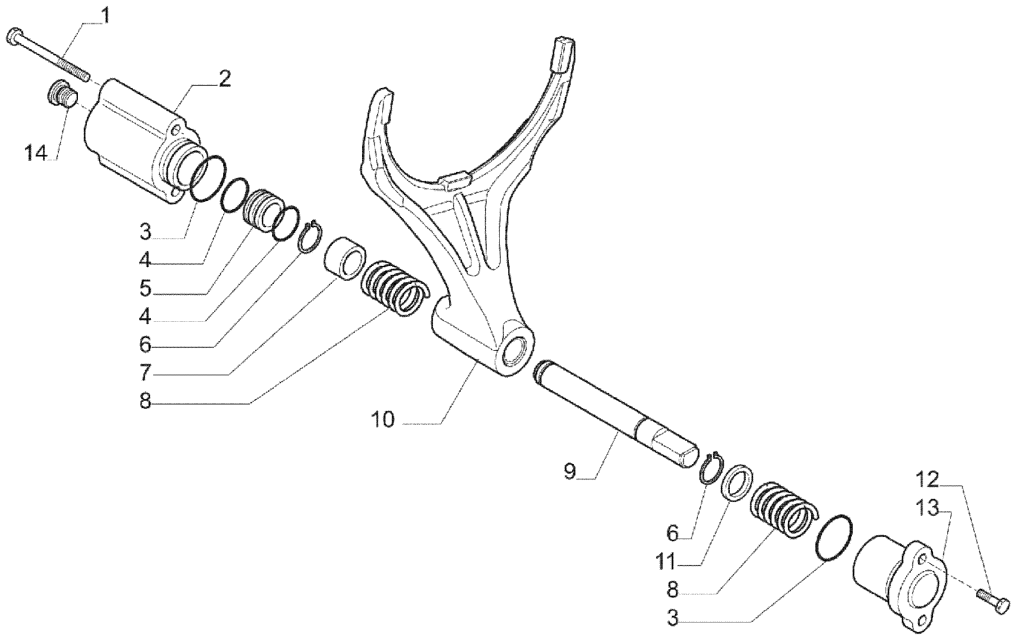

ŞANZIMAN (STANDART)
TRANSMISSION (STANDARD)

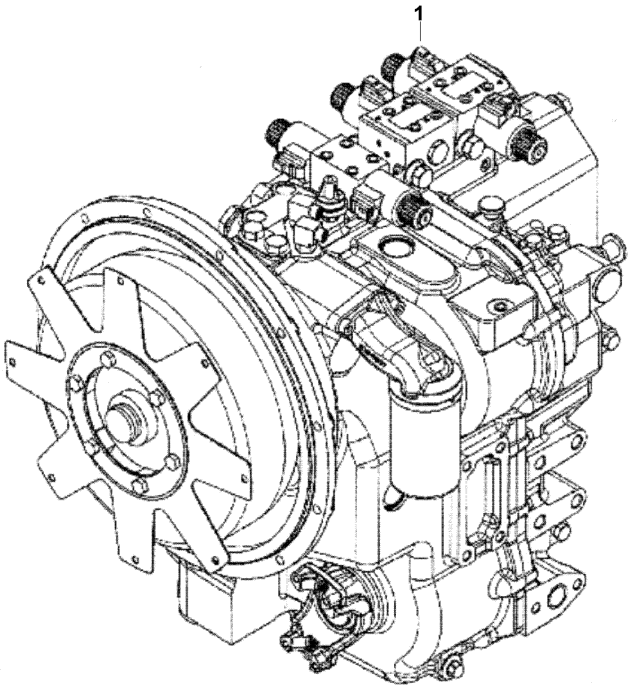

ŞANZIMAN, TORK KONVERTÖR (STANDART)
TRANSMISSION, TORGUE CONVERTER ARRANGMENT (STANDARD)

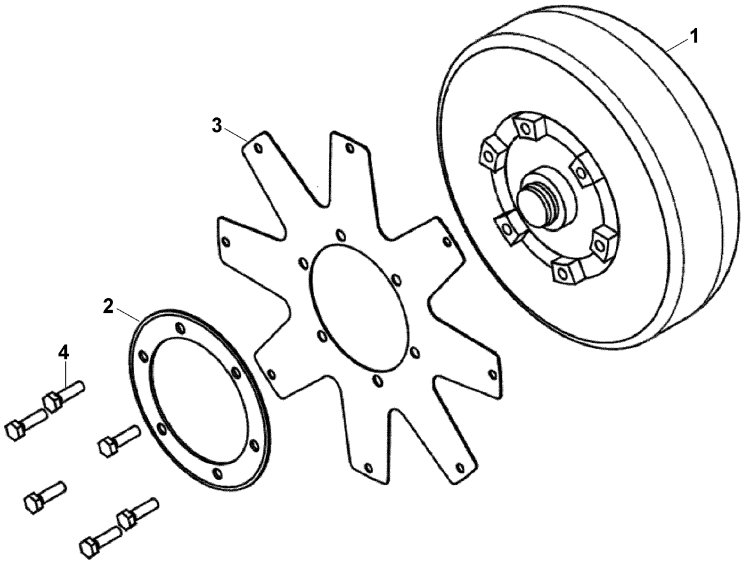

ŞANZIMAN, POMPA GRUBU
TRANSMISSION, PUMP GROUP

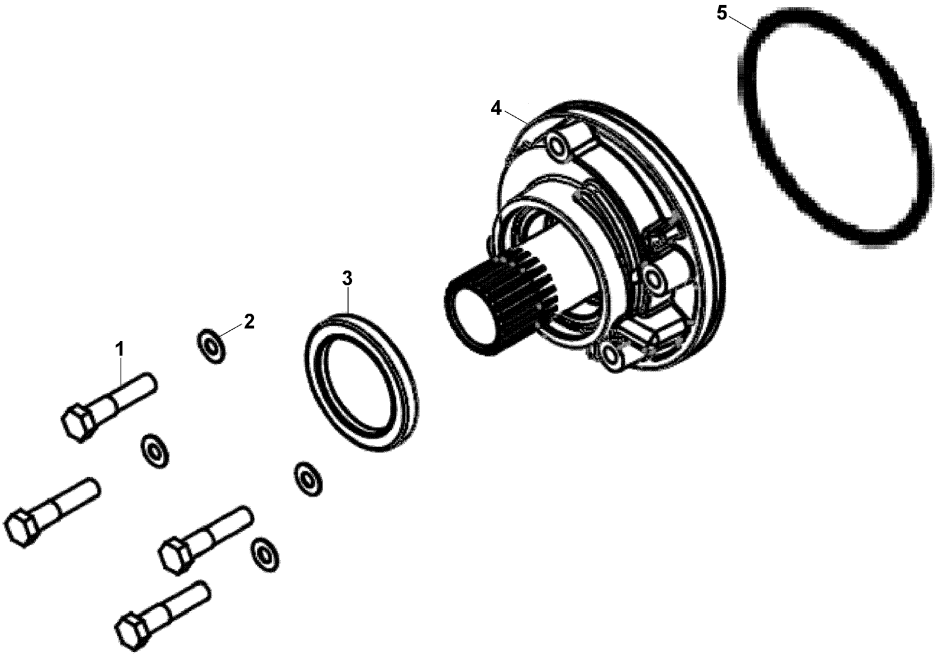

ŞANZIMAN, TRANSMİSYON GÖVDESİ, ÖN (STANDART)
TRANSMISSION, FRONT CASING AND ANCILLIARIES (STANDARD)

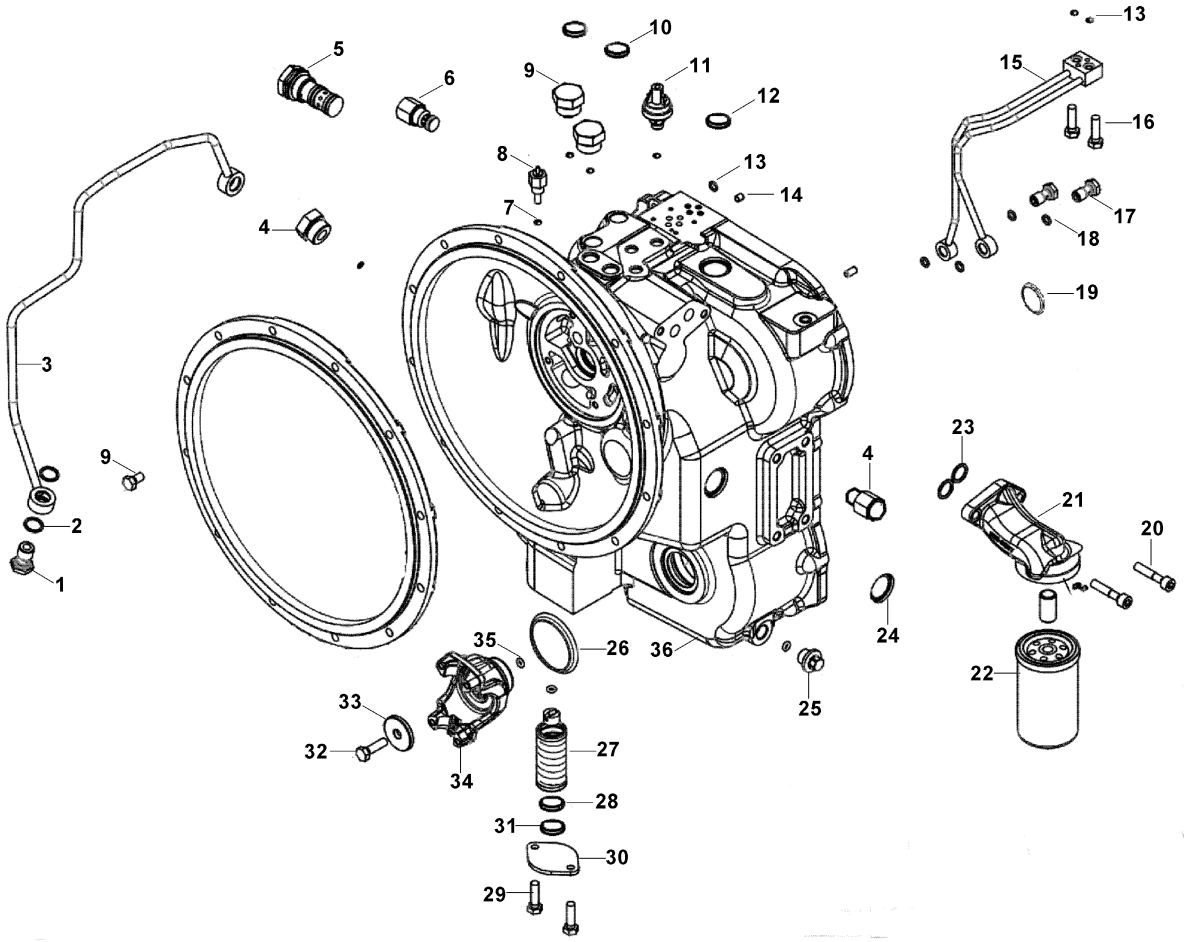

ŞANZIMAN, TRANSMİSYON GÖVDESİ, ÖN (STANDART)
TRANSMISSION, FRONT CASING AND ANCILLIARIES (STANDARD)

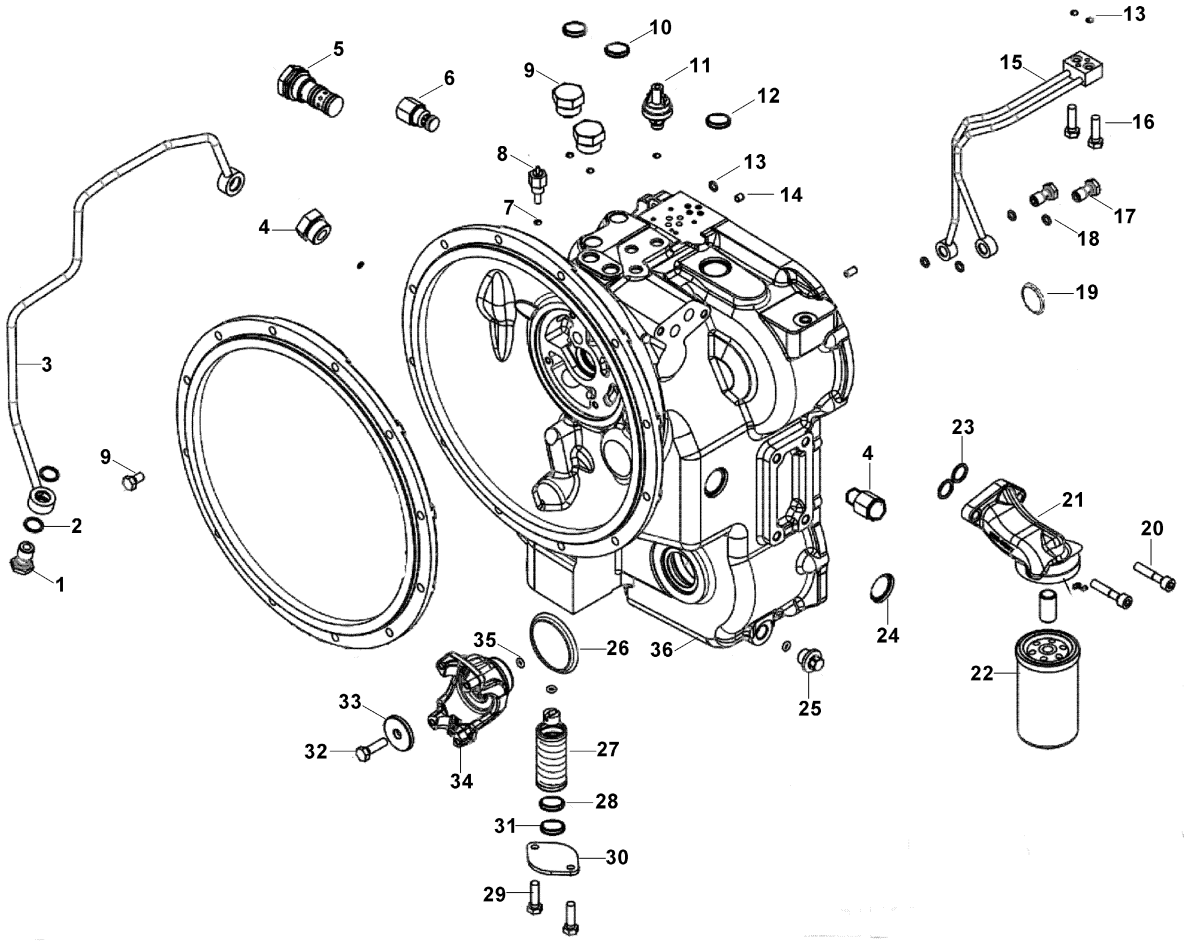

ŞANZIMAN, VALF GRUBU
TRANSMISSION, VALVE GROUP

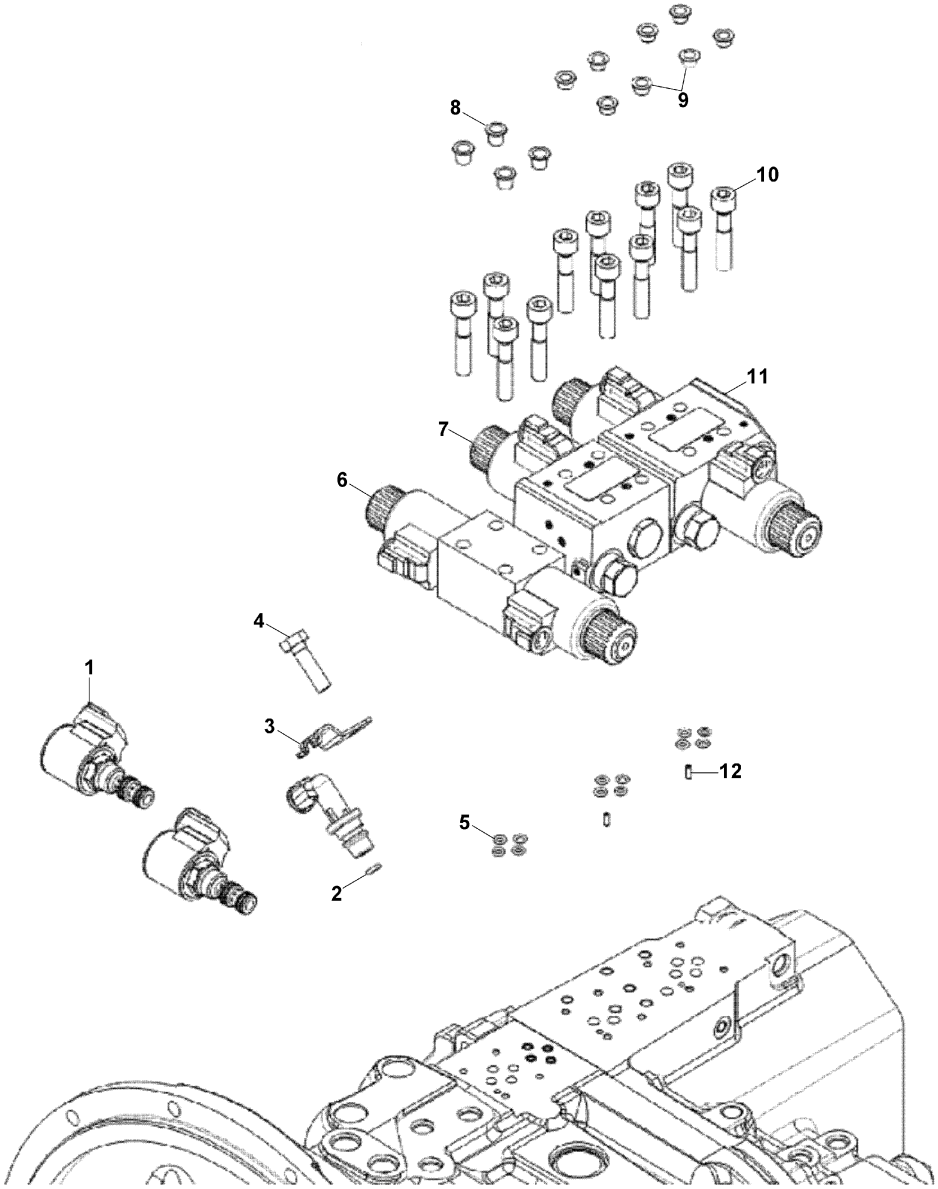

ŞANZIMAN, TRANSMİSYON GÖVDESİ, ARKA (STANDART)
TRANSMISSION, REAR CASING AND ANCILLIARIES (STANDARD)

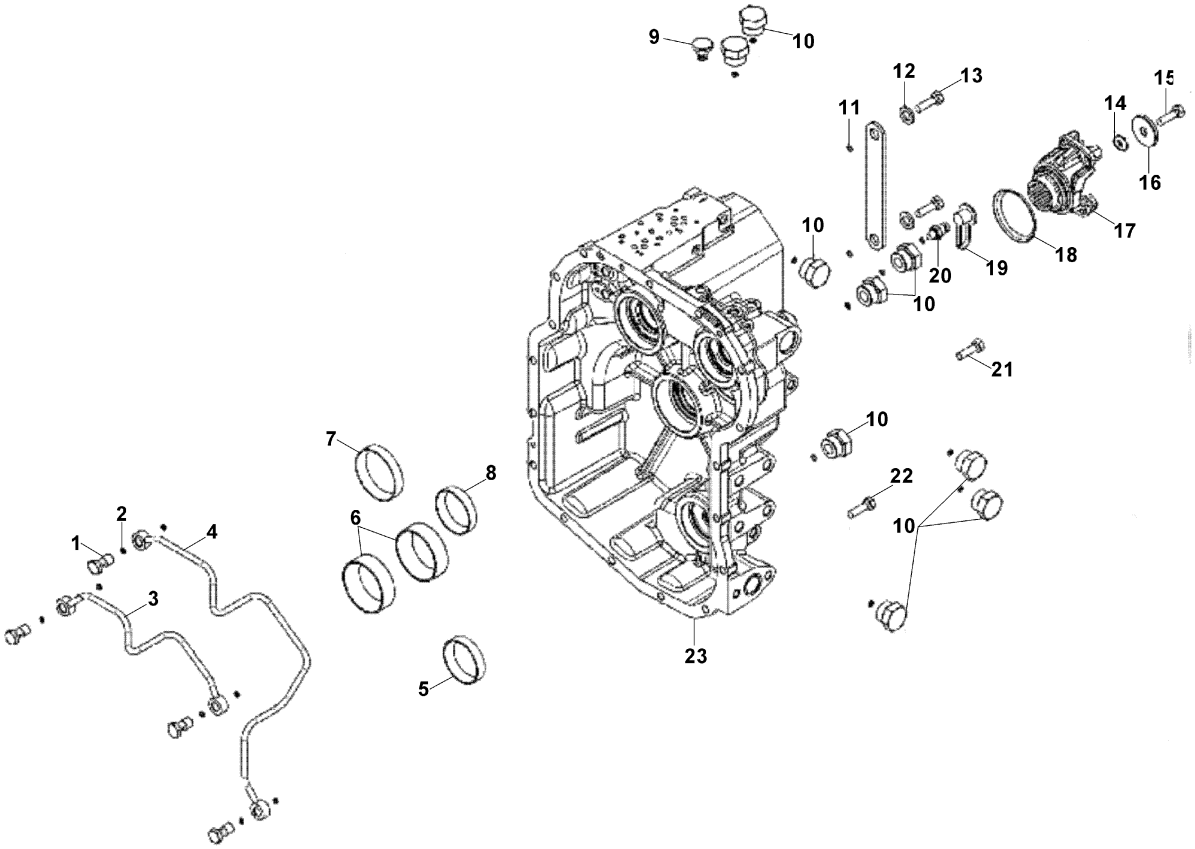

ŞANZIMAN, KAVRAMA DİSK GRUBU
TRANSMISSION, CLUTCH GROUP

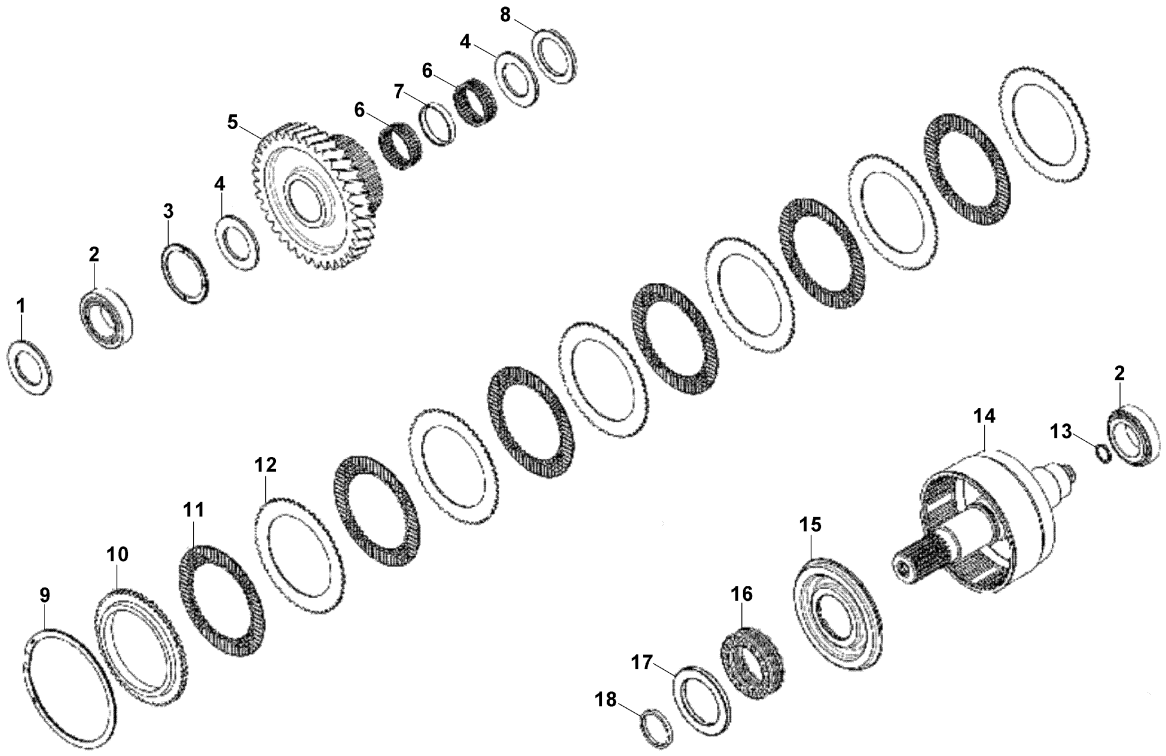

ŞANZIMAN, KAVRAMA GRUBU, ANA (STANDART)
TRANSMISSION, SHAFT GROUP - MAIN (STANDARD)

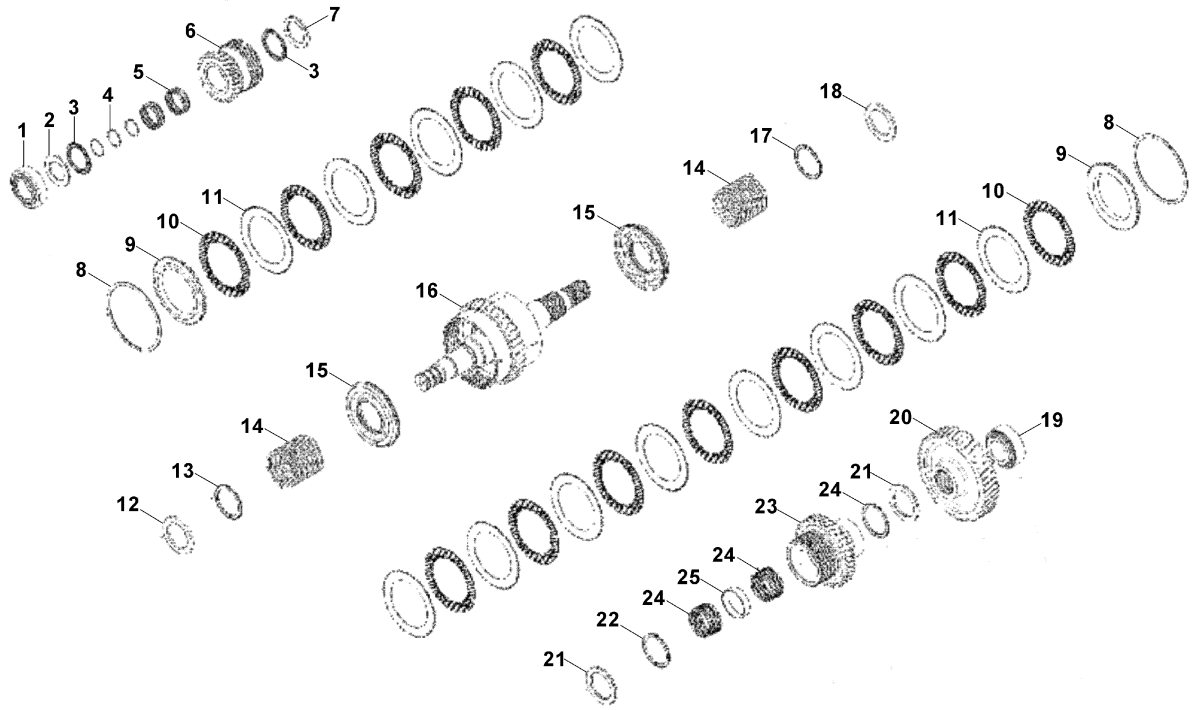

ŞANZIMAN, KAVRAMA GRUBU, AVARE DİŞLİ
TRANSMISSION, SHAFT GROUP IDLER

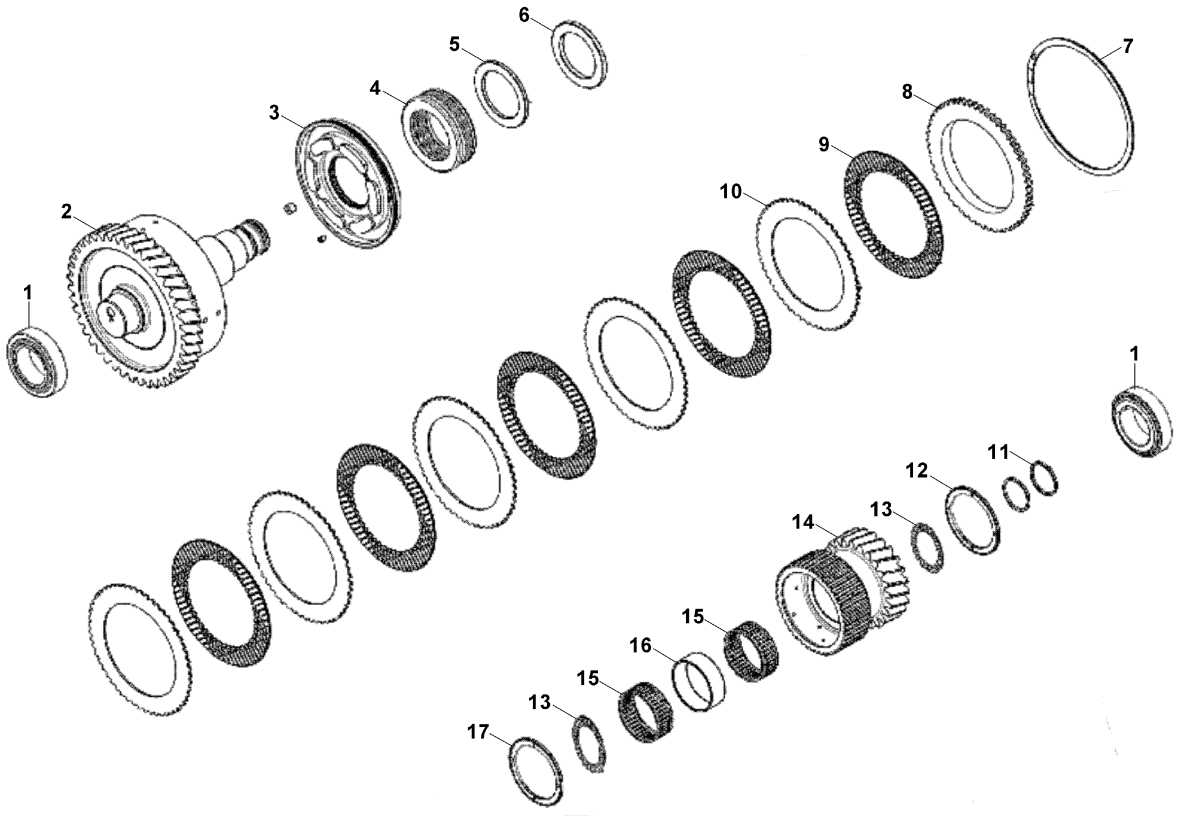

ŞANZIMAN, KAVRAMA GRUBU, GİRİŞ (STANDART)
TRANSMISSION, SHAFT GROUP INPUT (STANDARD)

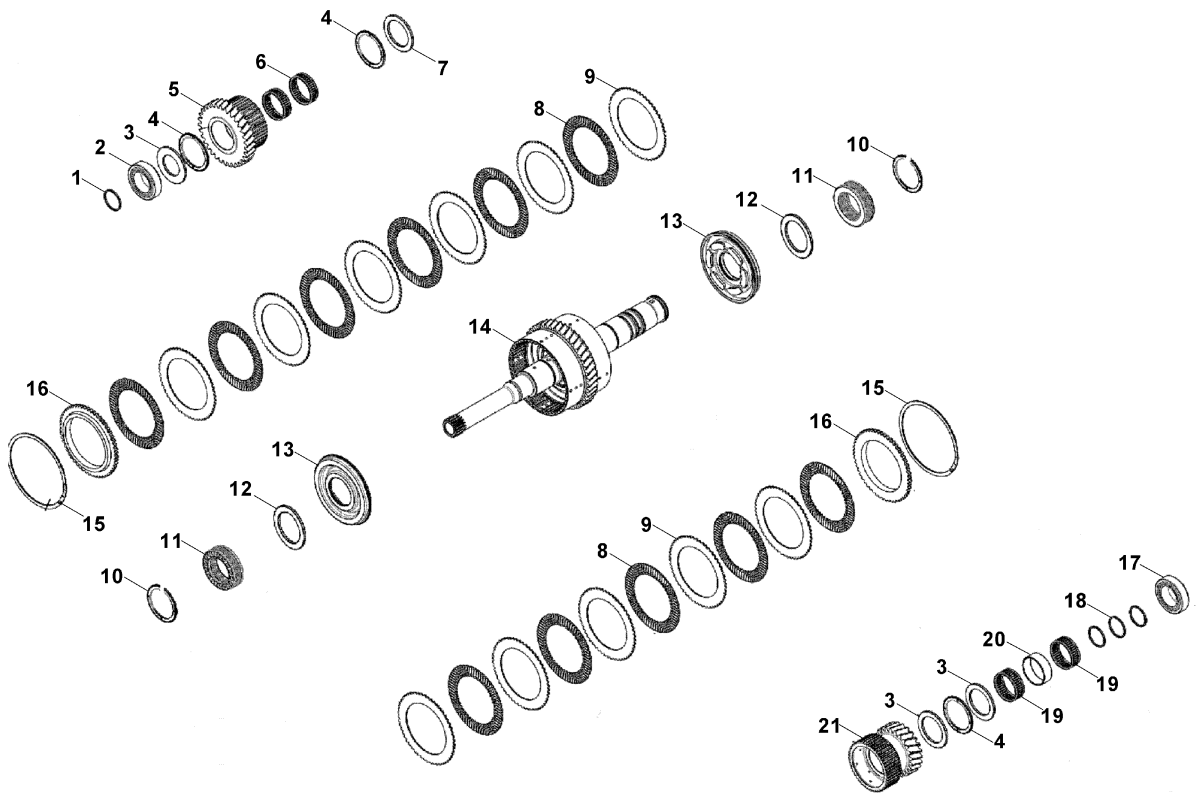

ŞANZIMAN, ŞAFT GRUBU, PTO (STANDART)
TRANSMISSION, SHAFT GROUP PTO (STANDARD)

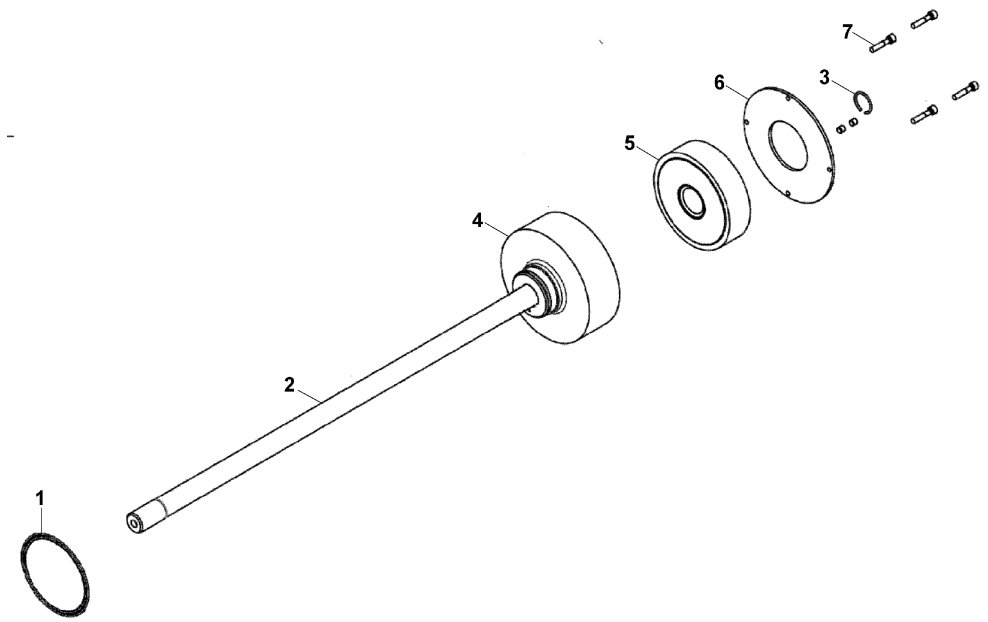

ŞANZIMAN, KAVRAMA GRUBU, GERİ (STANDART)
TRANSMISSION, SHAFT GROUP COUNTER (STANDARD)

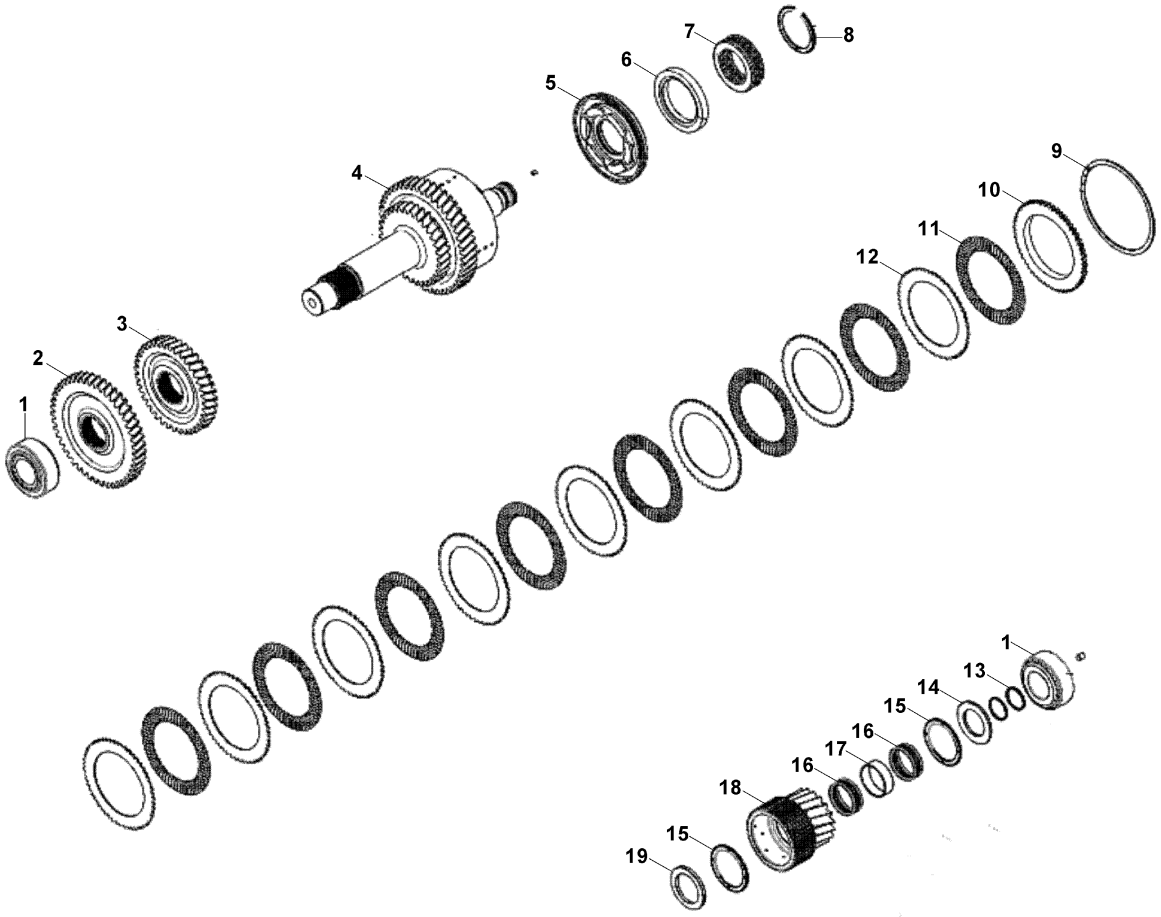

ŞANZIMAN (LUCK-UP)
TRANSMISSION (LUCK-UP)

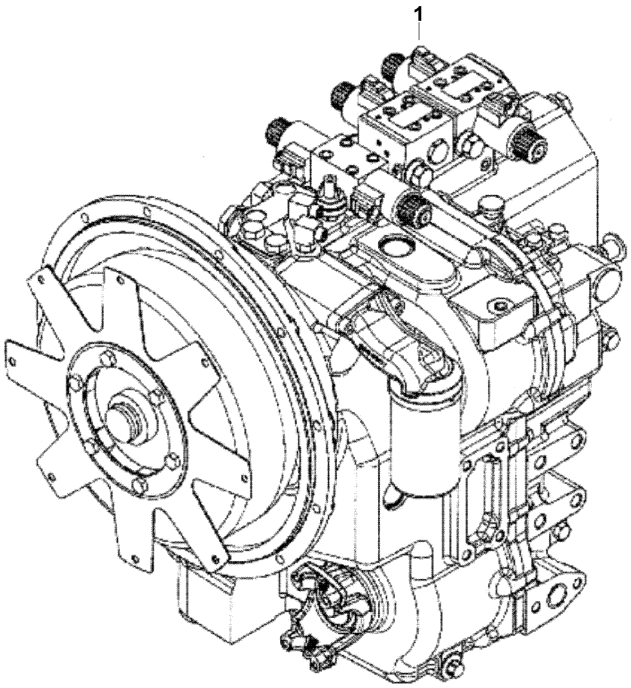

ŞANZIMAN, TORK KONVERTÖR (LUCK-UP)
TRANSMISSION, TORGUE CONVERTER ARRANGMENT (LUCK-UP)

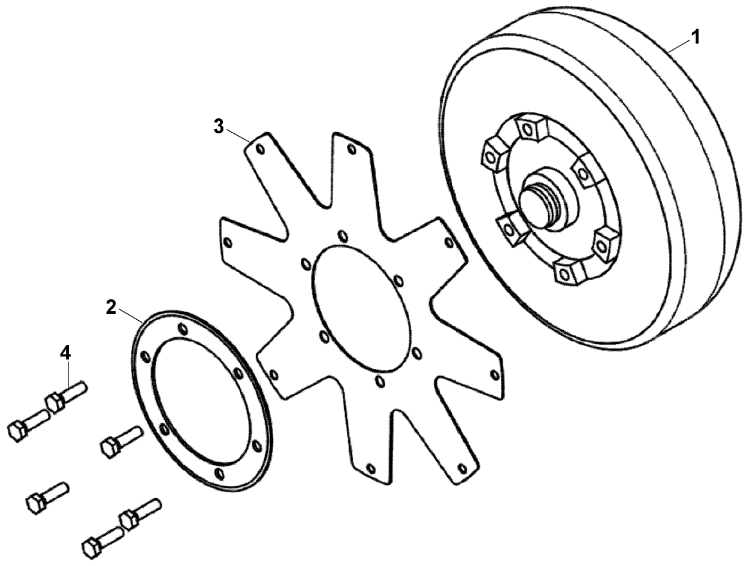

ŞANZIMAN, POMPA GRUBU (LUCK- UP)
TRANSMISSION, PUMP GROUP (LUCK- UP)

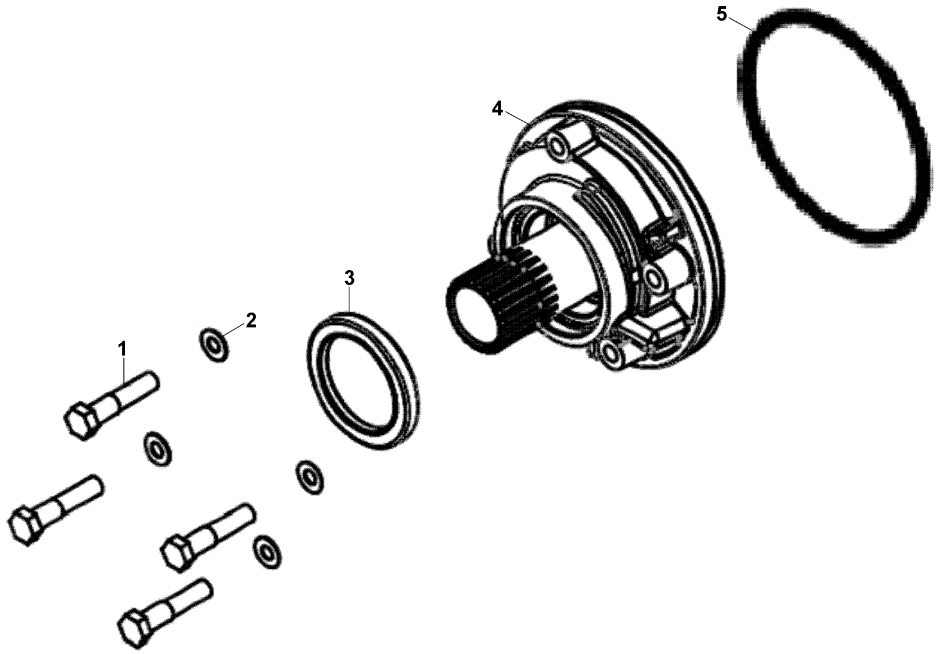

ŞANZIMAN, TRANSMİSYON GÖVDESİ, ÖN (LUCK-UP)
TRANSMISSION, FRONT CASING AND ANCILLIARIES (LUCK-UP)

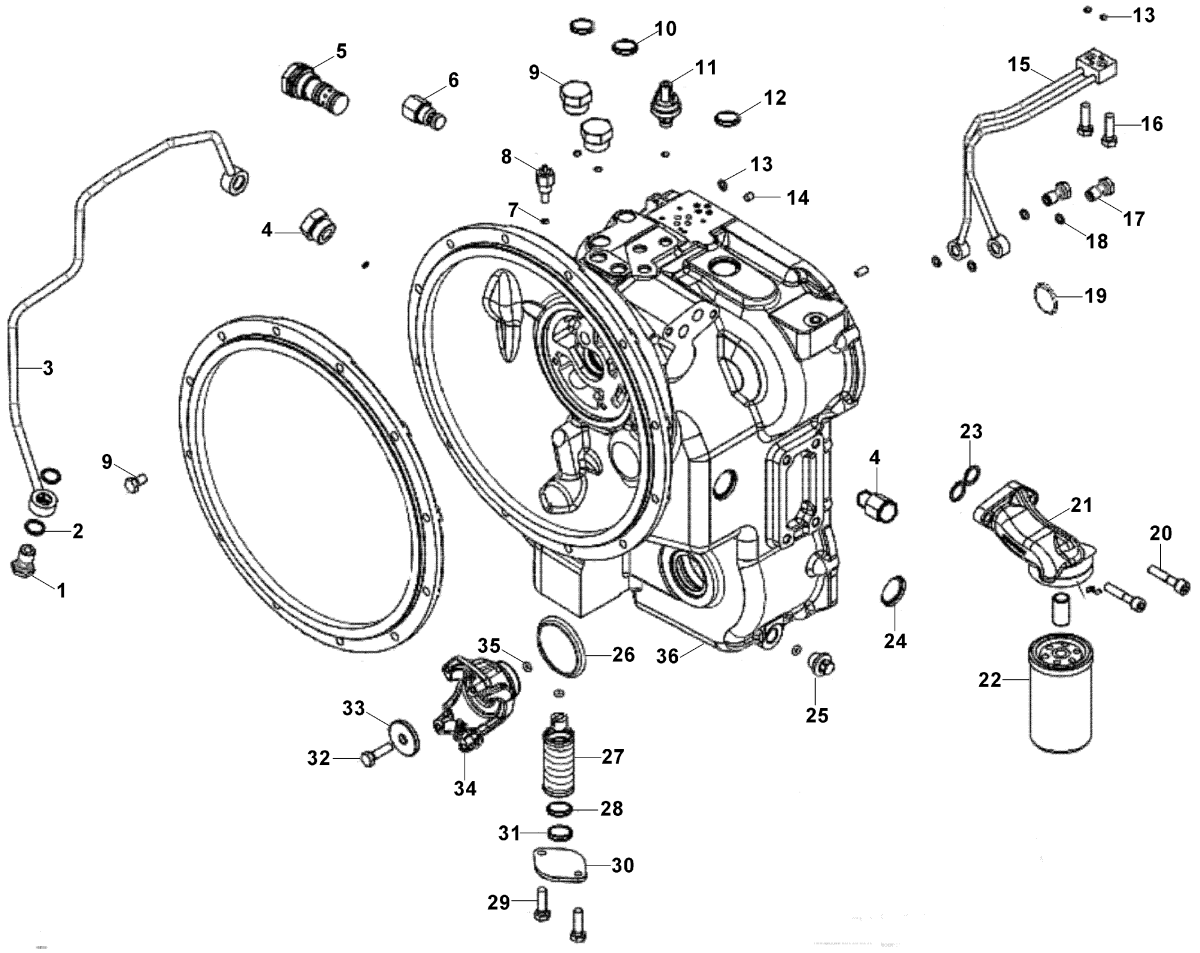

ŞANZIMAN, TRANSMİSYON GÖVDESİ, ÖN (LUCK-UP)
TRANSMISSION, FRONT CASING AND ANCILLIARIES (LUCK-UP)

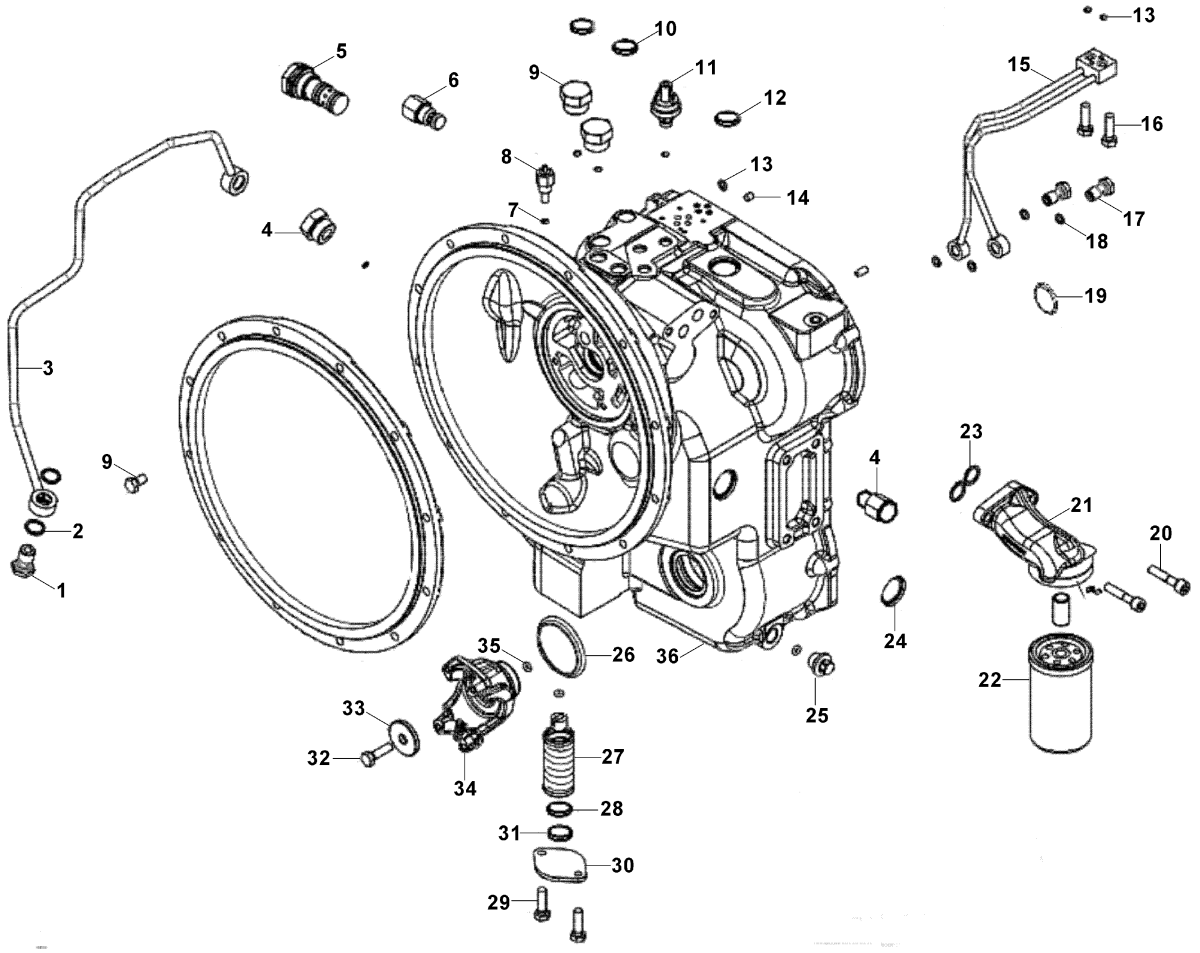

ŞANZIMAN, VALF GRUBU (LUCK- UP)
TRANSMISSION, VALVE GROUP (LUCK- UP)

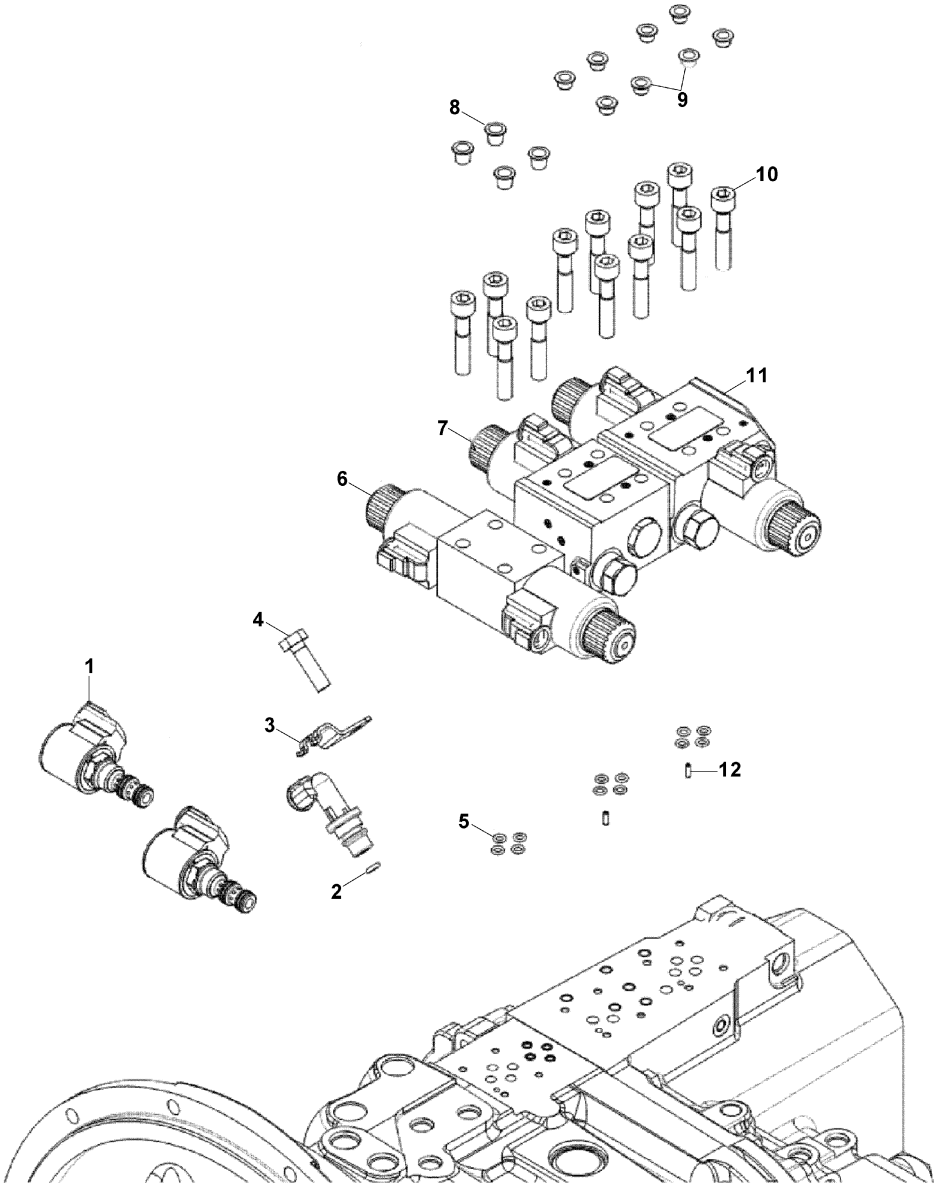

ŞANZIMAN, TRANSMİSYON GÖVDESİ, ARKA (LUCK-UP)
TRANSMISSION, REAR CASING AND ANCILLIARIES (LUCK-UP)

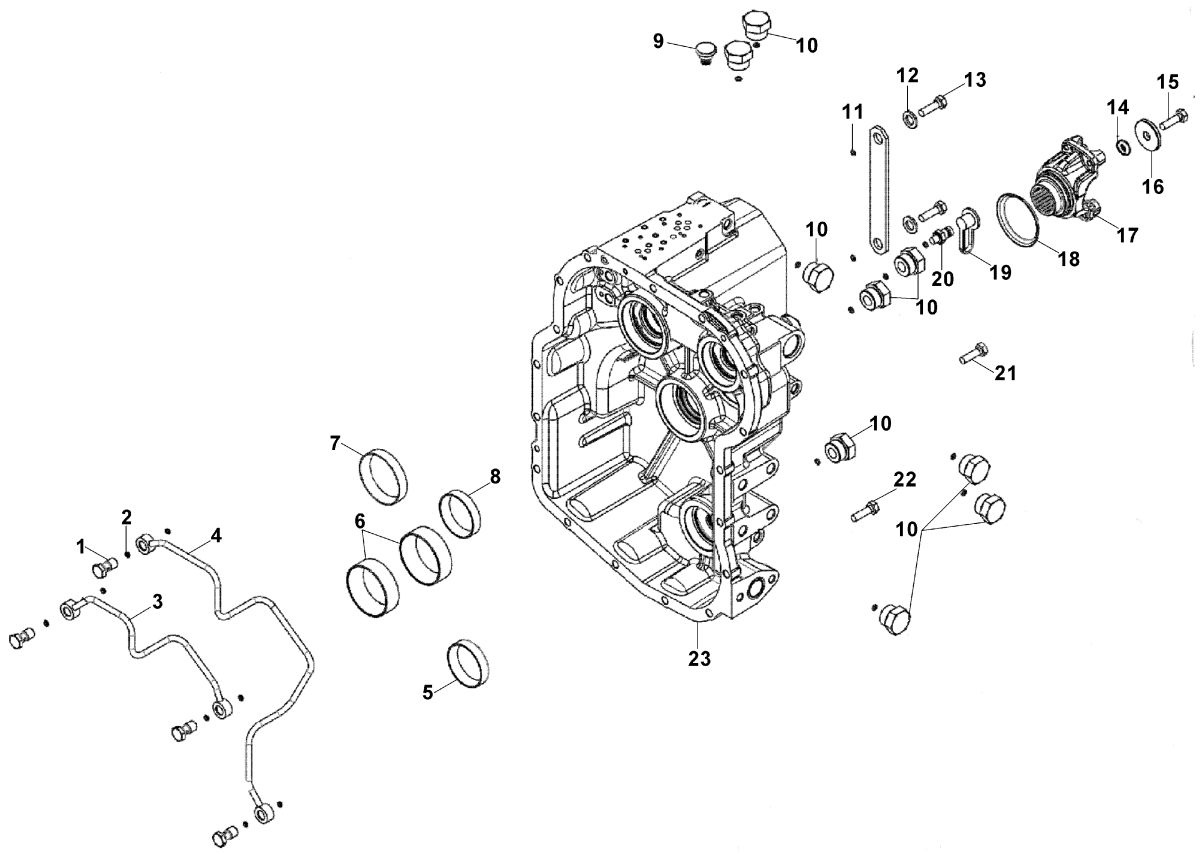

ŞANZIMAN, KAVRAMA DİSK GRUBU (LUCK- UP)
TRANSMISSION, CLUTCH GROUP (LUCK- UP)

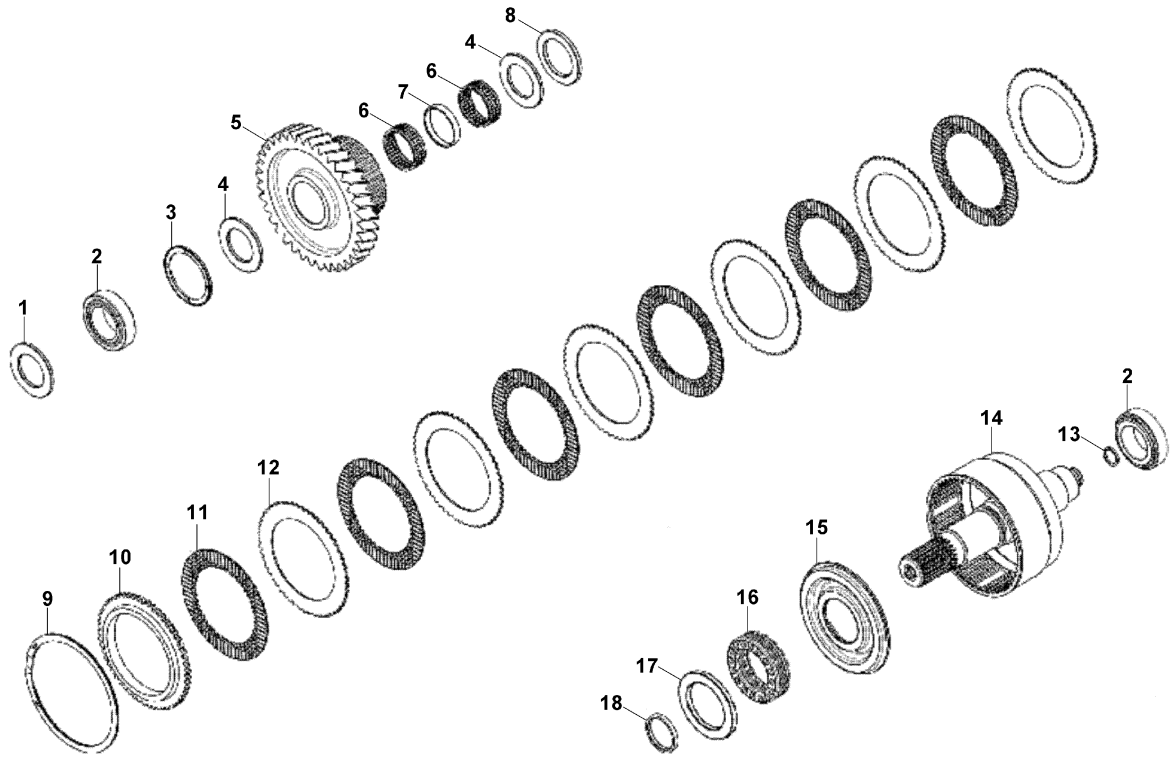

ŞANZIMAN, KAVRAMA GRUBU, ANA (LUCK-UP)
TRANSMISSION, SHAFT GROUP - MAIN (LUCK-UP)

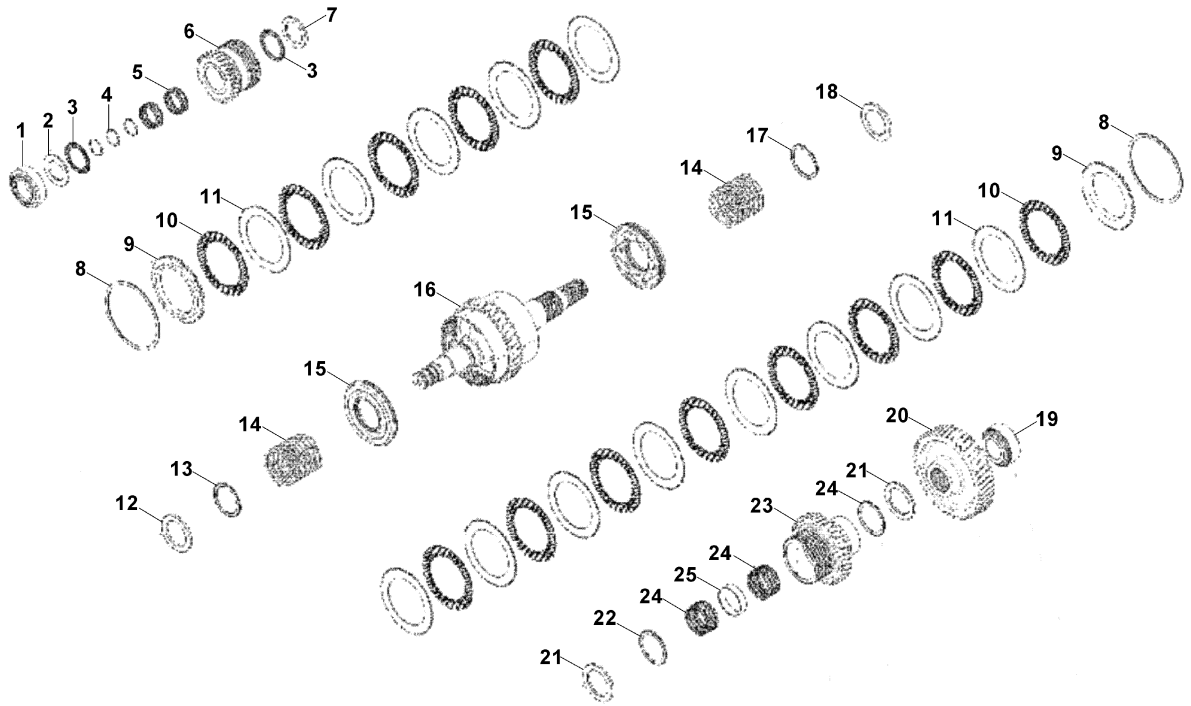

ŞANZIMAN, KAVRAMA GRUBU, AVARE DİŞLİ
TRANSMISSION, SHAFT GROUP IDLER

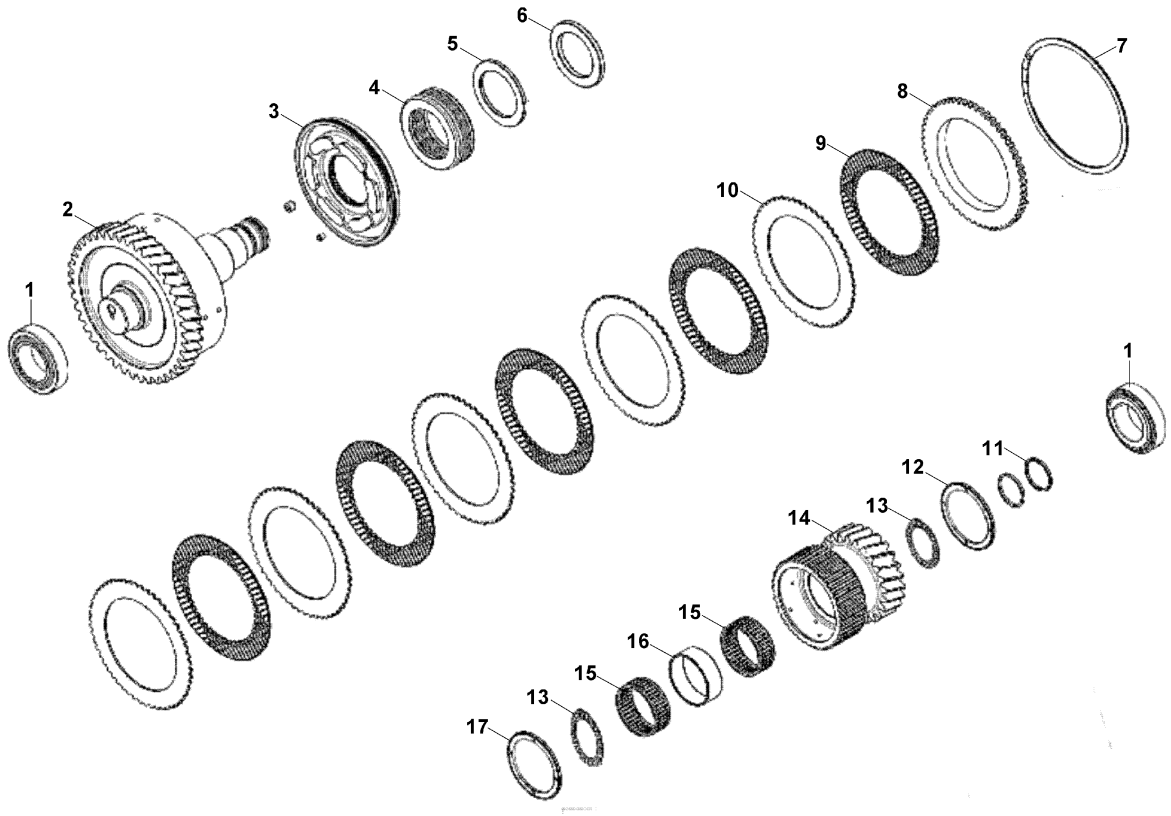

ŞANZIMAN, KAVRAMA GRUBU, GİRİŞ (LUCK-UP)
TRANSMISSION, SHAFT GROUP INPUT (LUCK-UP)

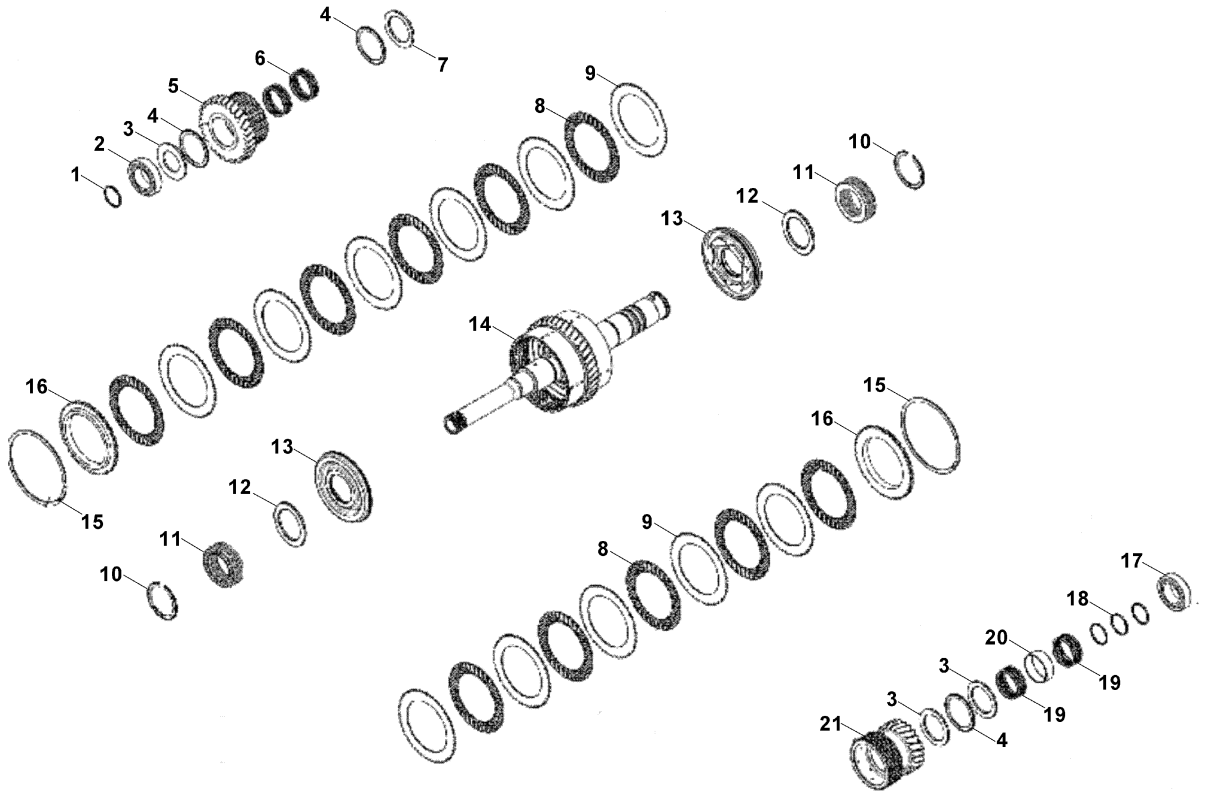

ŞANZIMAN, ŞAFT GRUBU, PTO (LUCK-UP)
TRANSMISSION, SHAFT GROUP PTO (LUCK-UP)

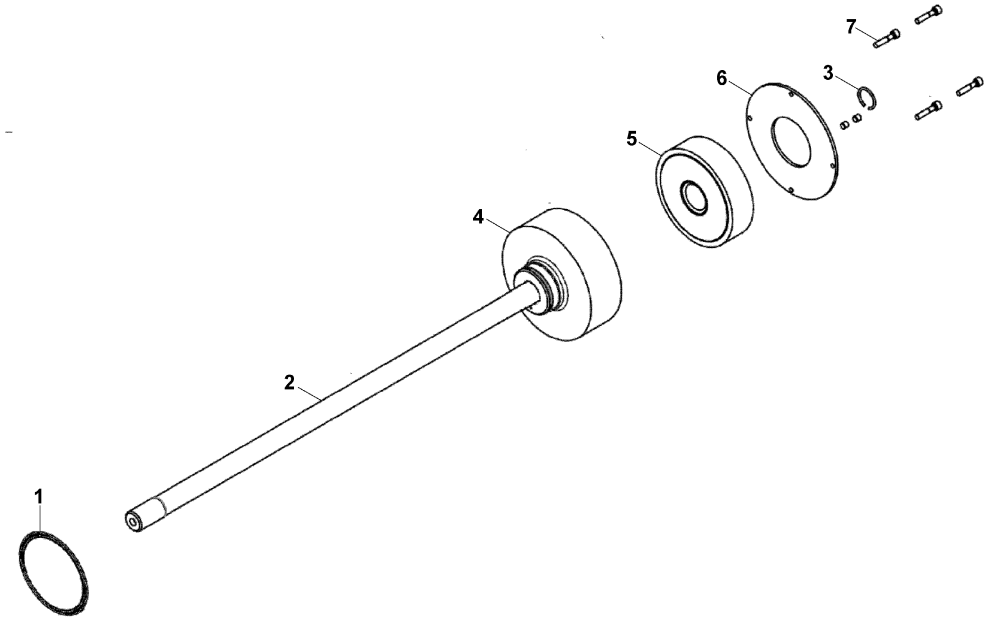

ŞANZIMAN, KAVRAMA GRUBU, GERİ (LUCK-UP)
TRANSMISSION, SHAFT GROUP COUNTER (LUCK-UP)

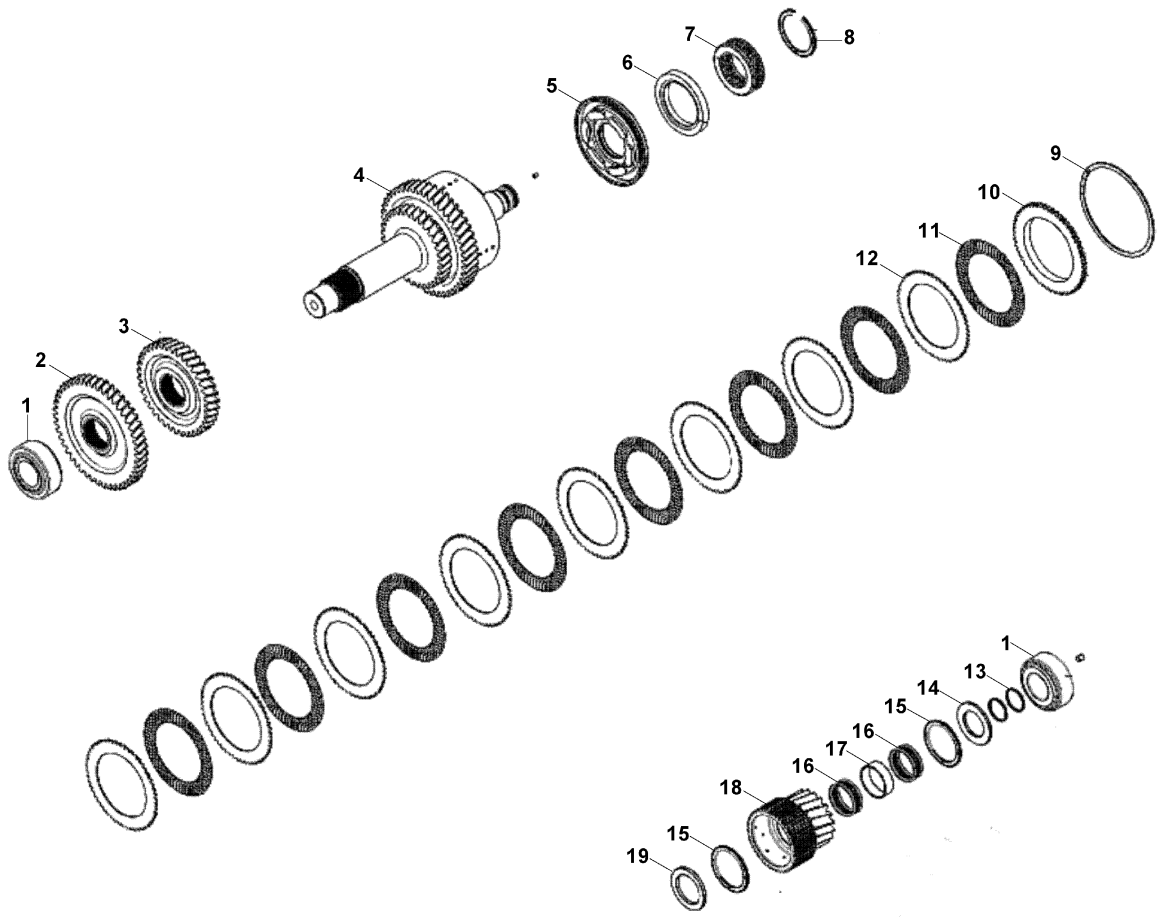

PARK FRENİ
PARKING BRAKE

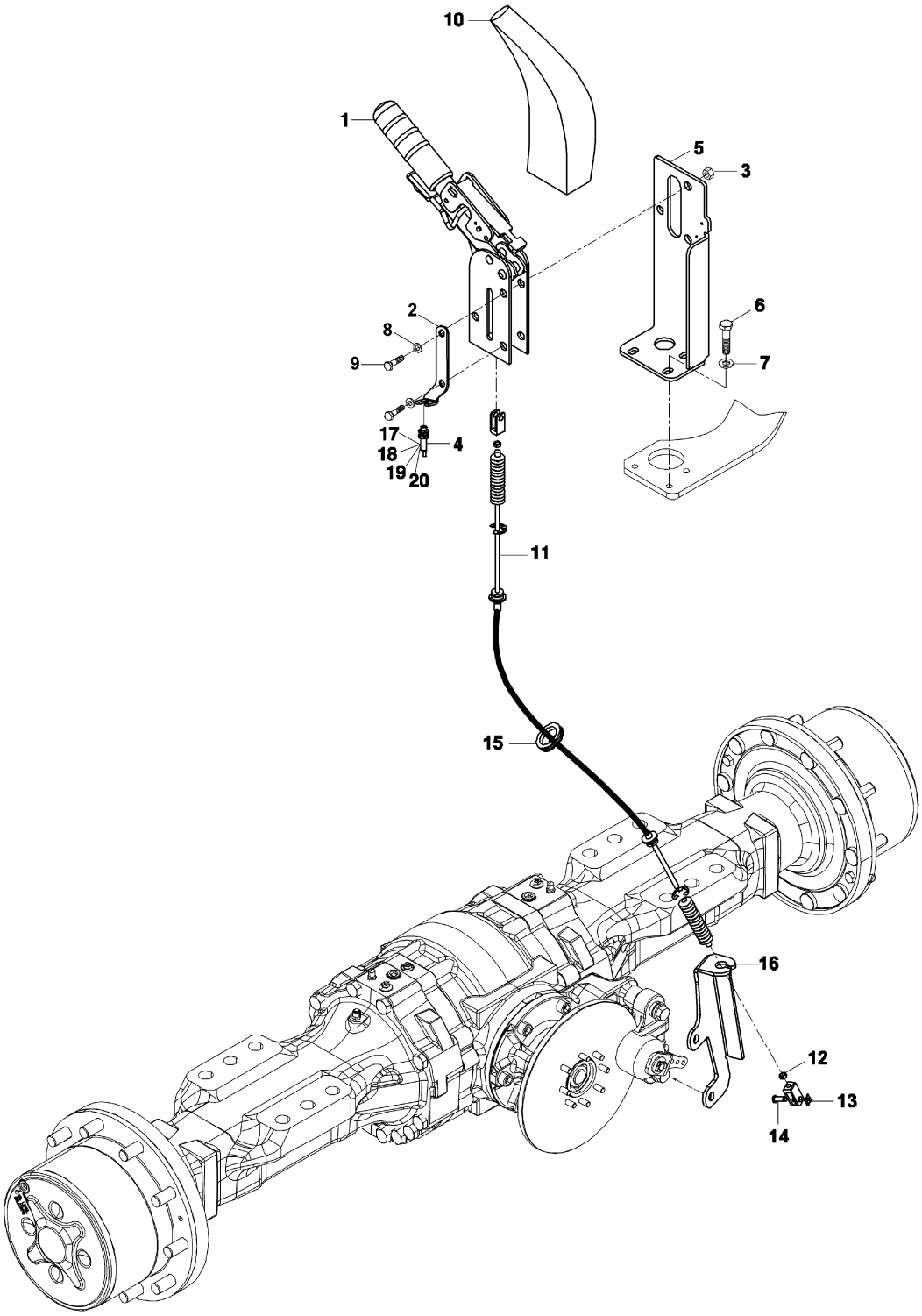

HİDROLİK TANK MONTAJI (VERSİYON 2)
HYDRAULIC TANK MOUNTING (VERSION 2)

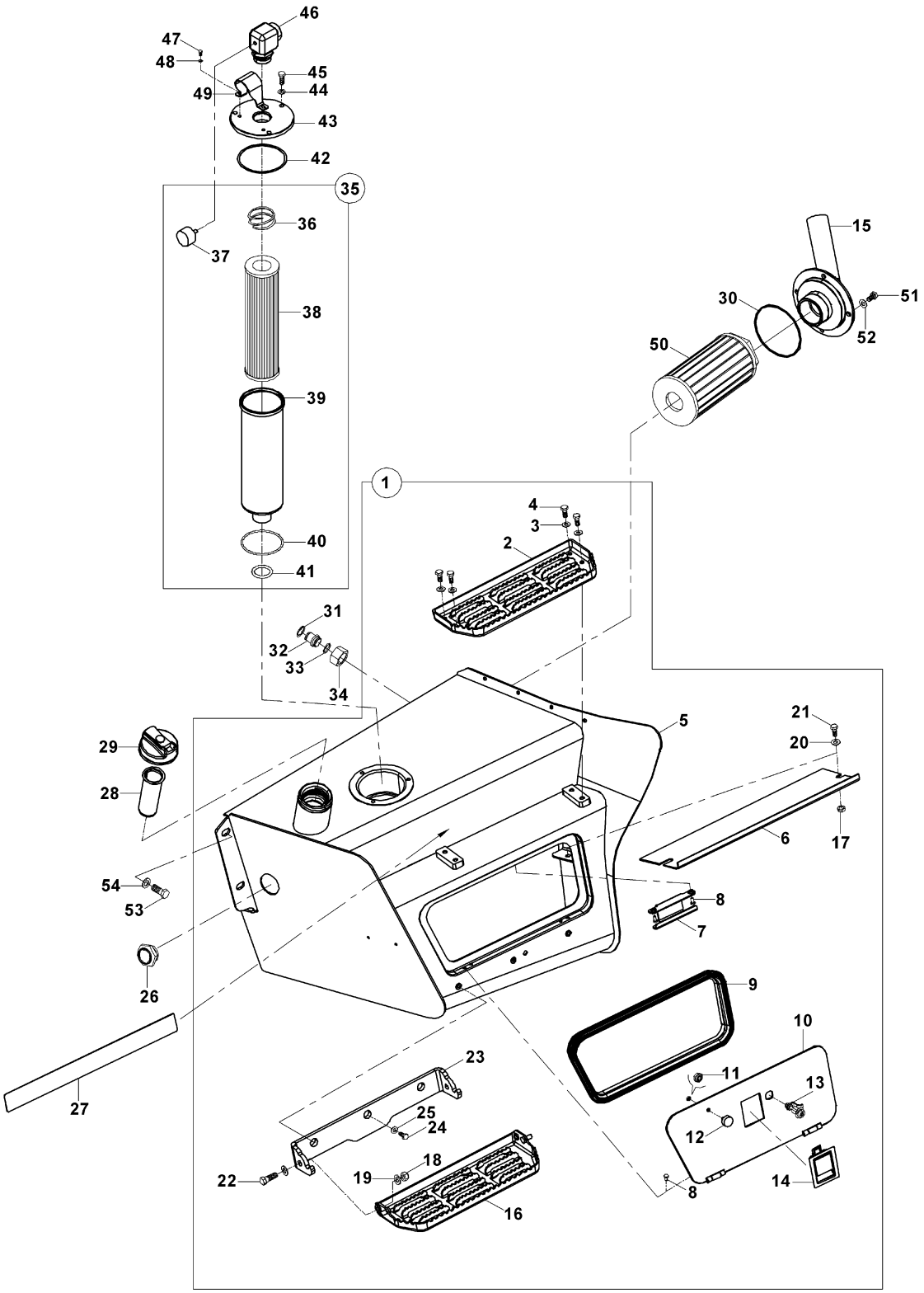

HİDROLİK TANK MONTAJI (VERSİYON 2)
HYDRAULIC TANK MOUNTING (VERSION 2)

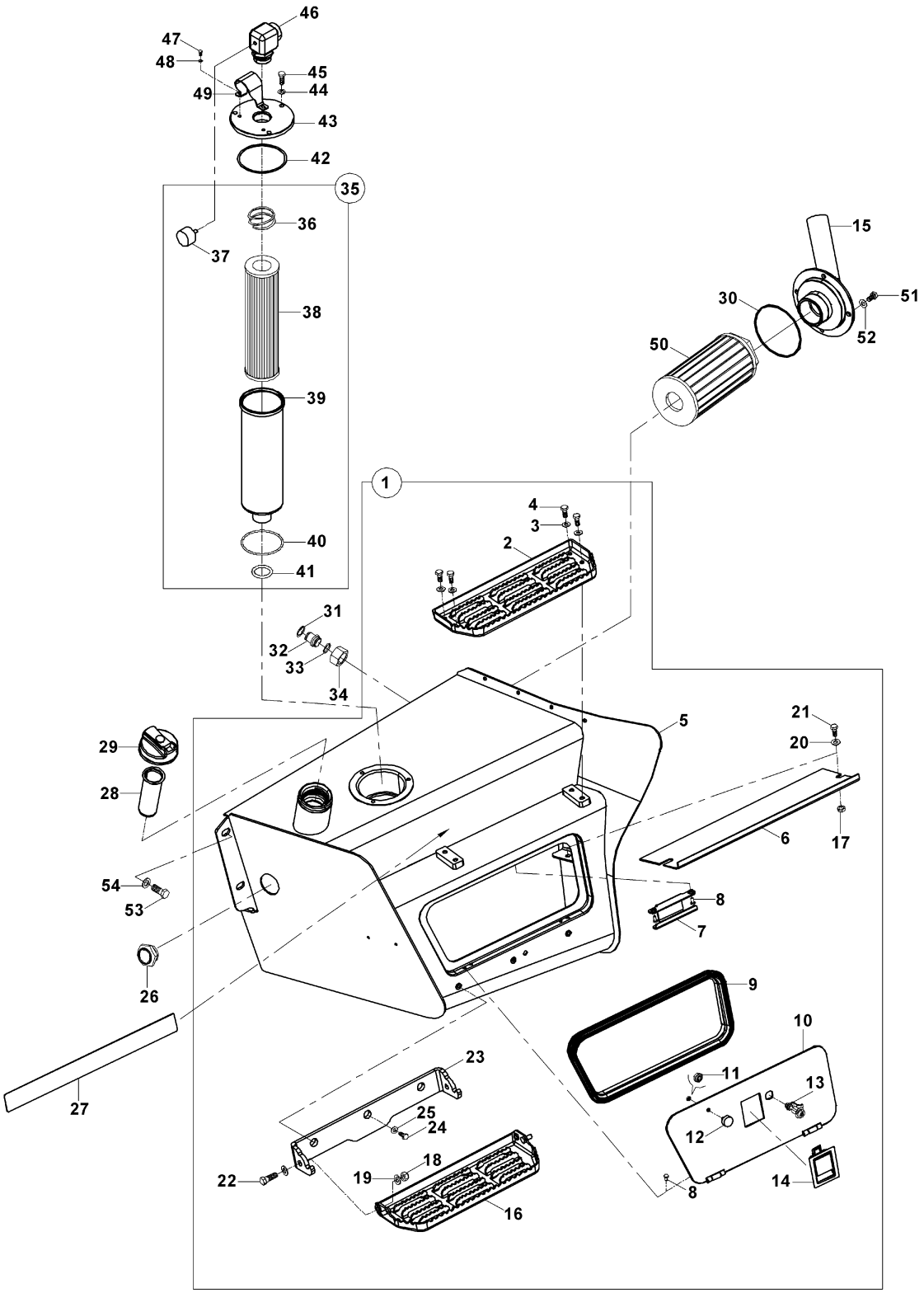

YÜKLEYİCİ KUMANDA MEKANİZMASI (AÇILIR KEPÇE & LEVYE)(TİP B)
LOADER CONTROL MECHANISM(MULTIPURPOSE BUCKET & LEVERS)(TYPE B)

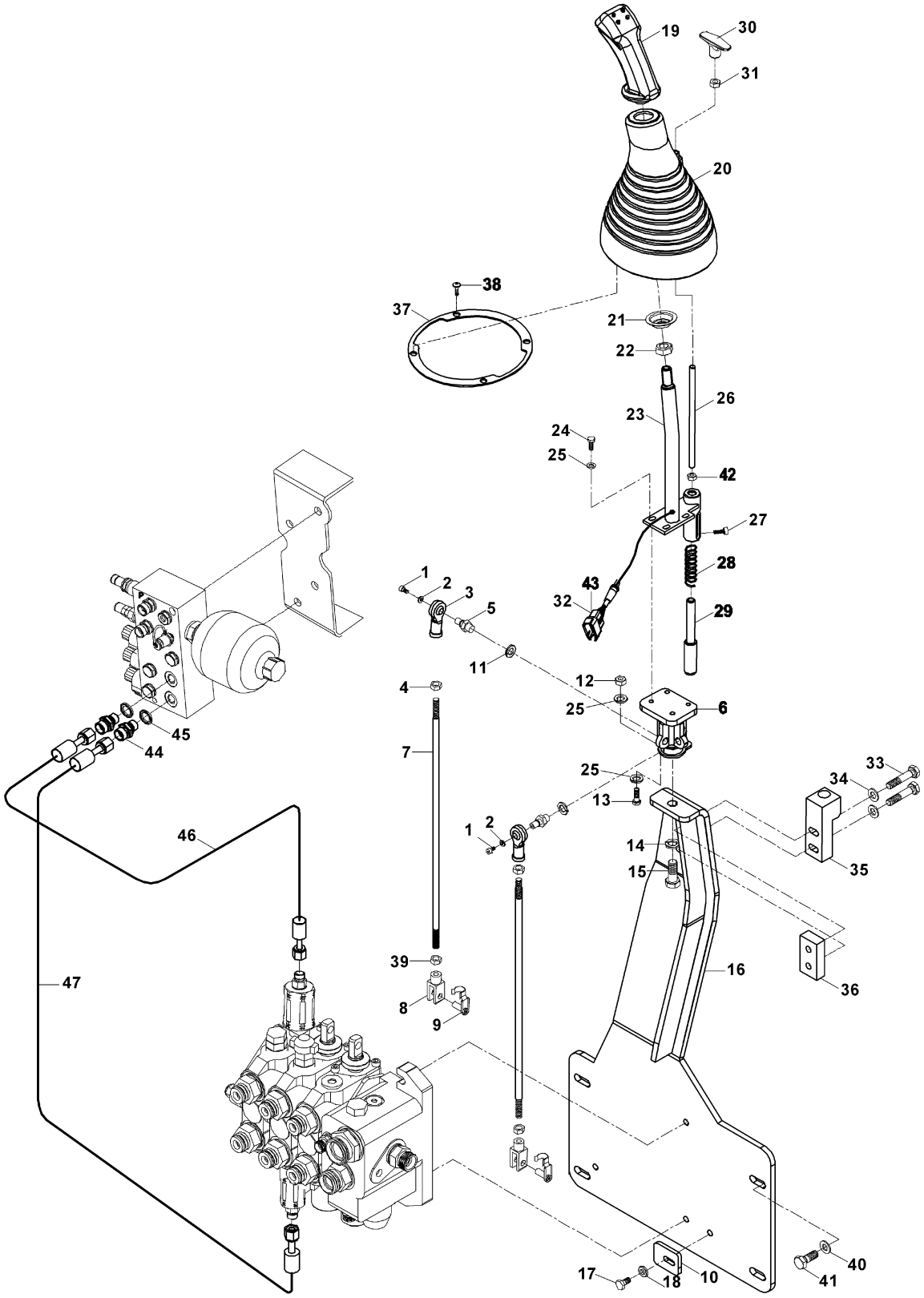

YÜKLEYİCİ KUMANDA MEKANİZMASI (AÇILIR KEPÇE & LEVYE)(TİP B)
LOADER CONTROL MECHANISM(MULTIPURPOSE BUCKET & LEVERS)(TYPE B)

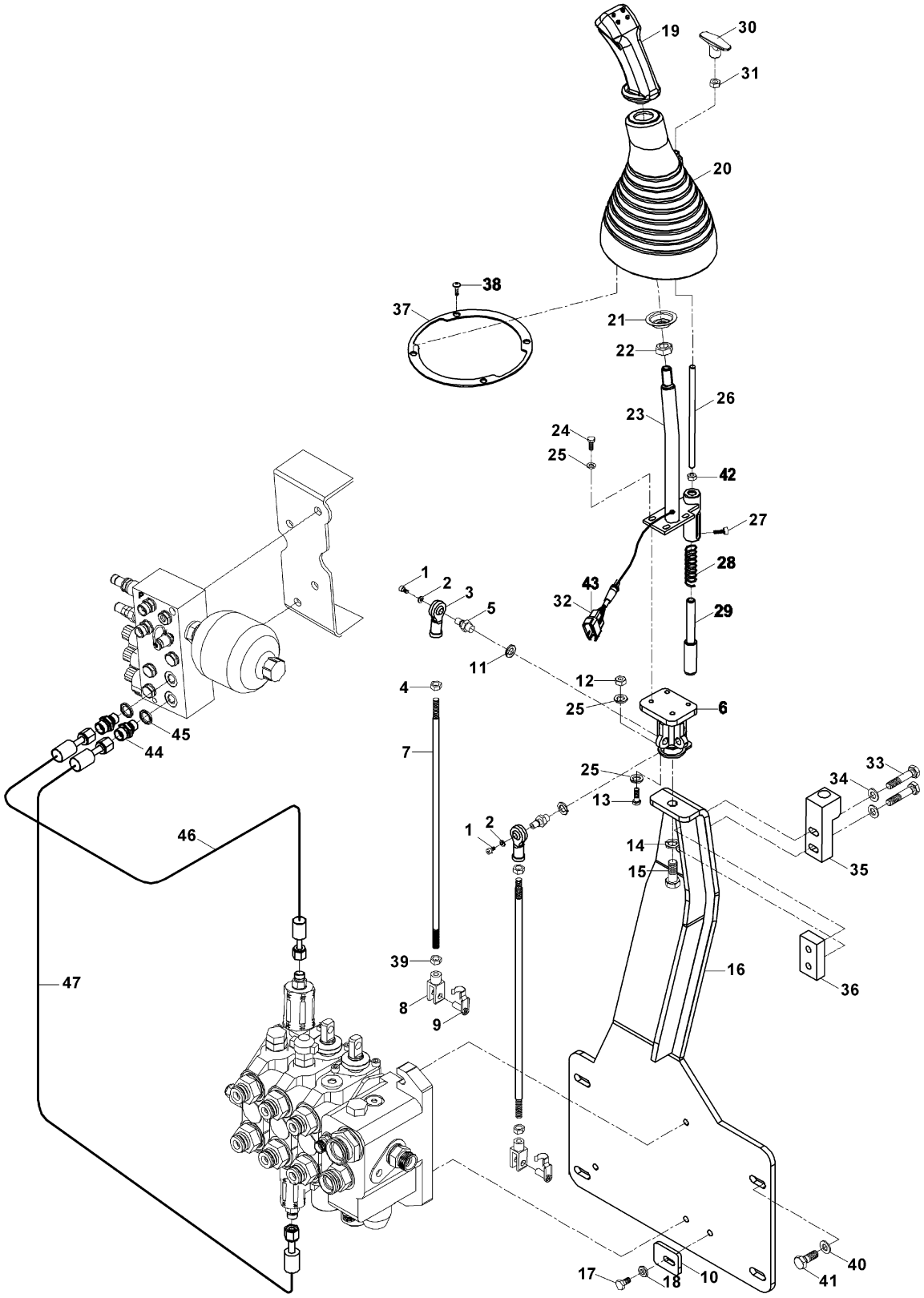

YÜKLEYİCİ KUMANDA MEKANİZMASI (AÇILIR KEPÇE & LEVYE)(TİP B)
LOADER CONTROL MECHANISM(MULTIPURPOSE BUCKET & LEVERS)(TYPE B)

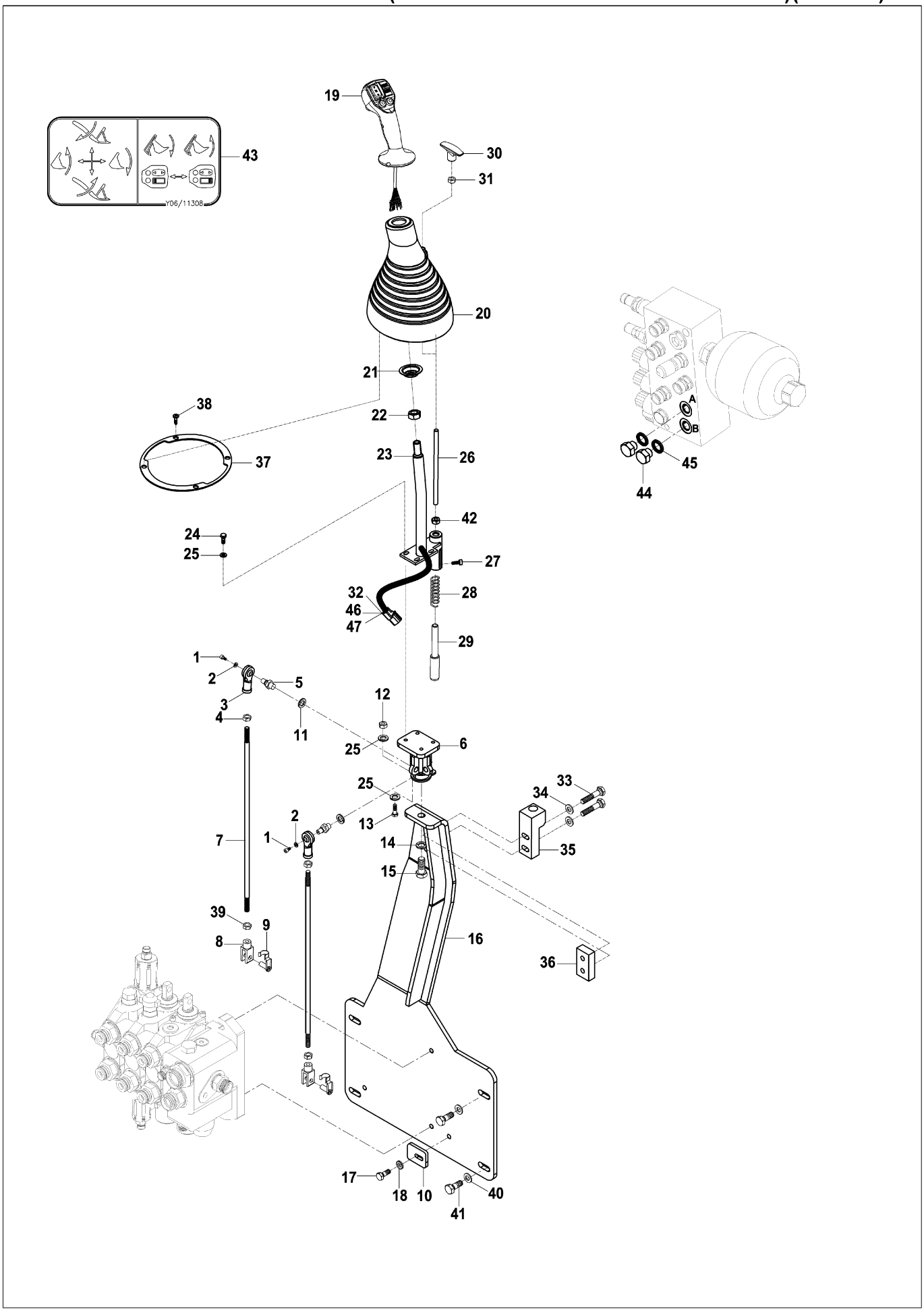

YÜKLEYİCİ KUMANDA MEKANİZMASI (AÇILIR KEPÇE & LEVYE)(TİP B)
LOADER CONTROL MECHANISM(MULTIPURPOSE BUCKET & LEVERS)(TYPE B)

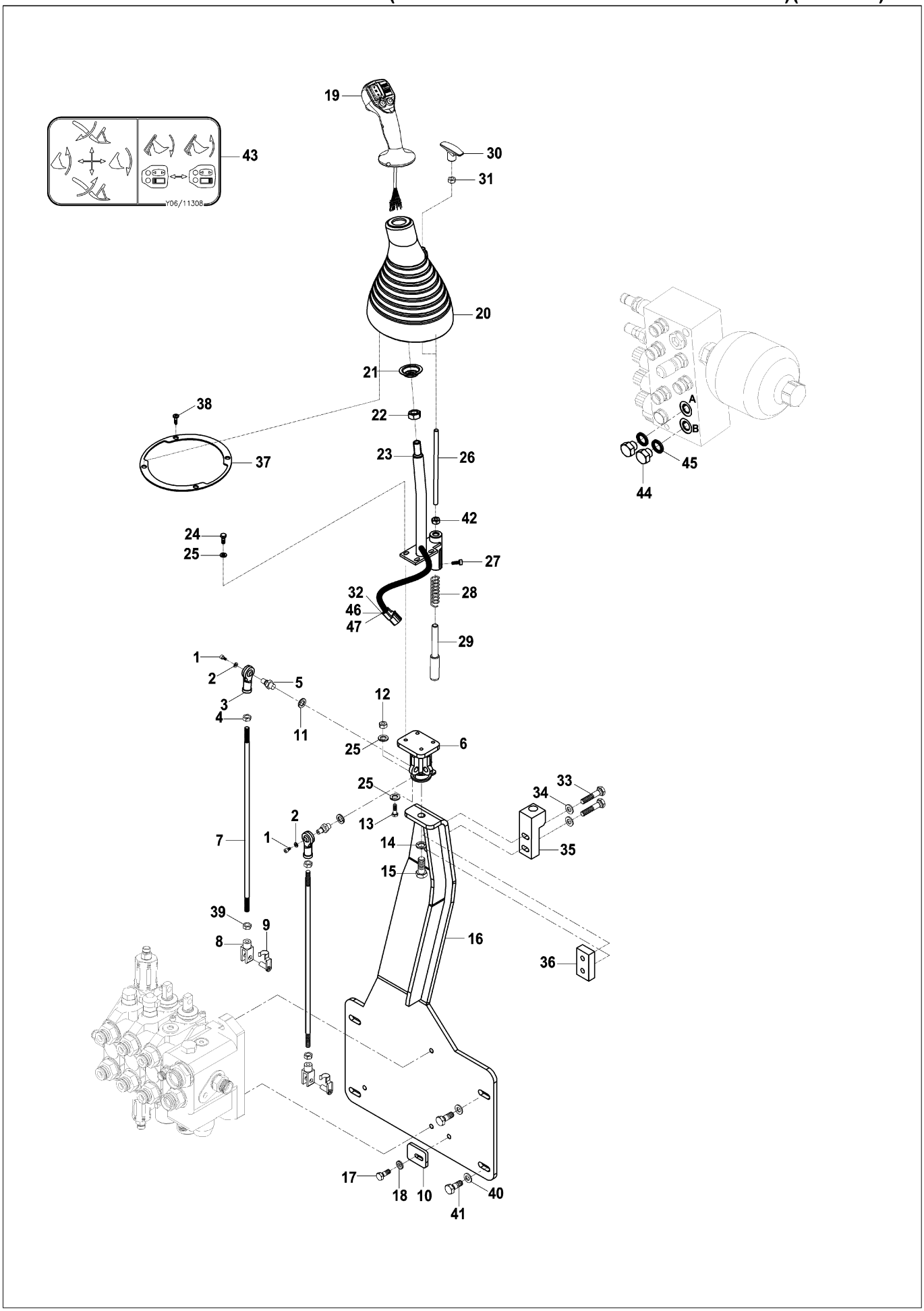

YÜKLEYİCİ KUMANDA MEKANİZMASI (AÇILIR KEPÇE & JOYSTİCK)(TİP B)
LOADER CONTROL MECHANISM (MULTIPURPOSE BUCKET & JOYSTICK) (TYPE B)

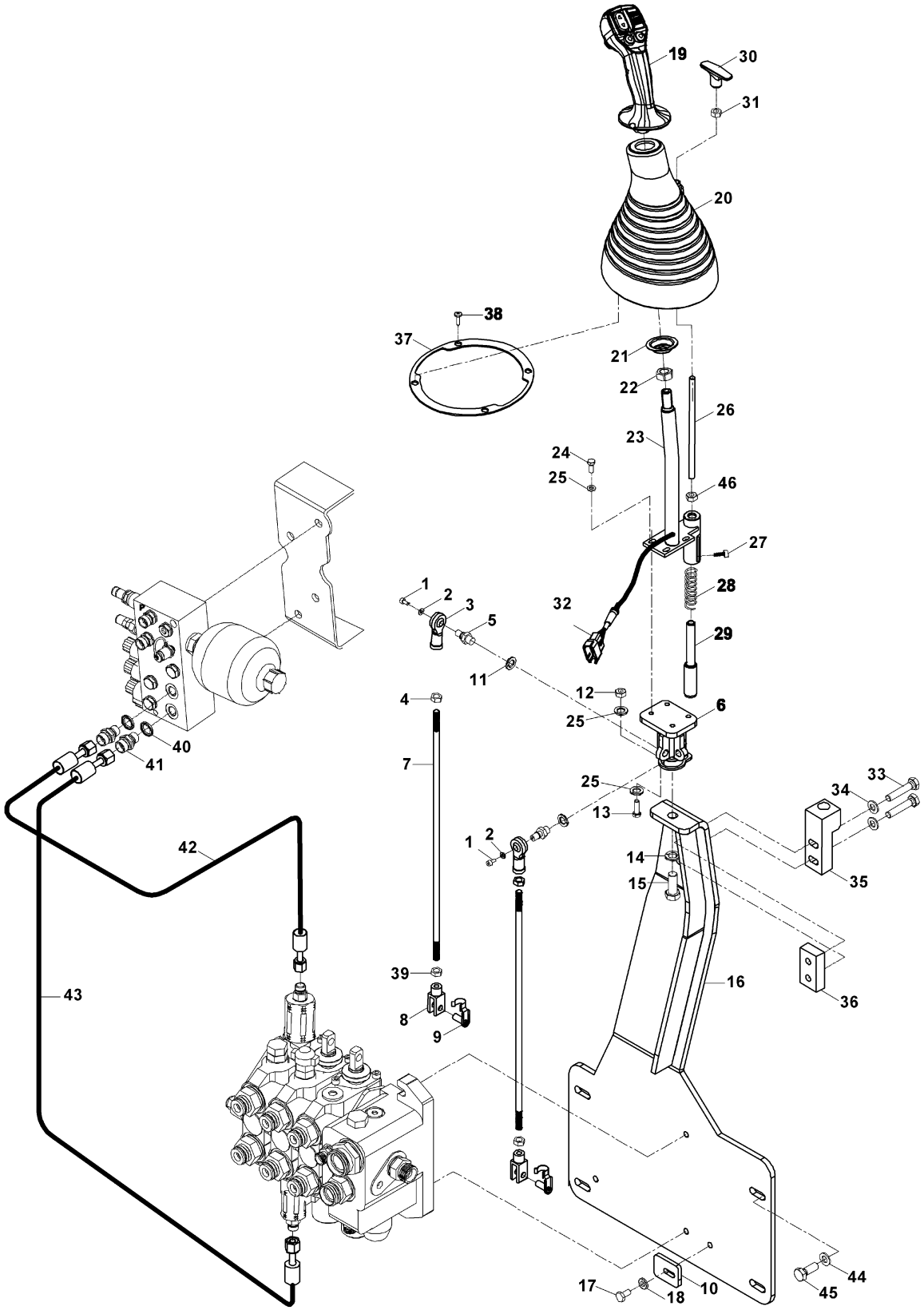

YÜKLEYİCİ KUMANDA MEKANİZMASI (SABİT KEPÇE & JOYSTİCK) (TİP B)
BACKHOE CONTROL MECHANISM (SHOVEL & JOYSTICK) (TYPE B)

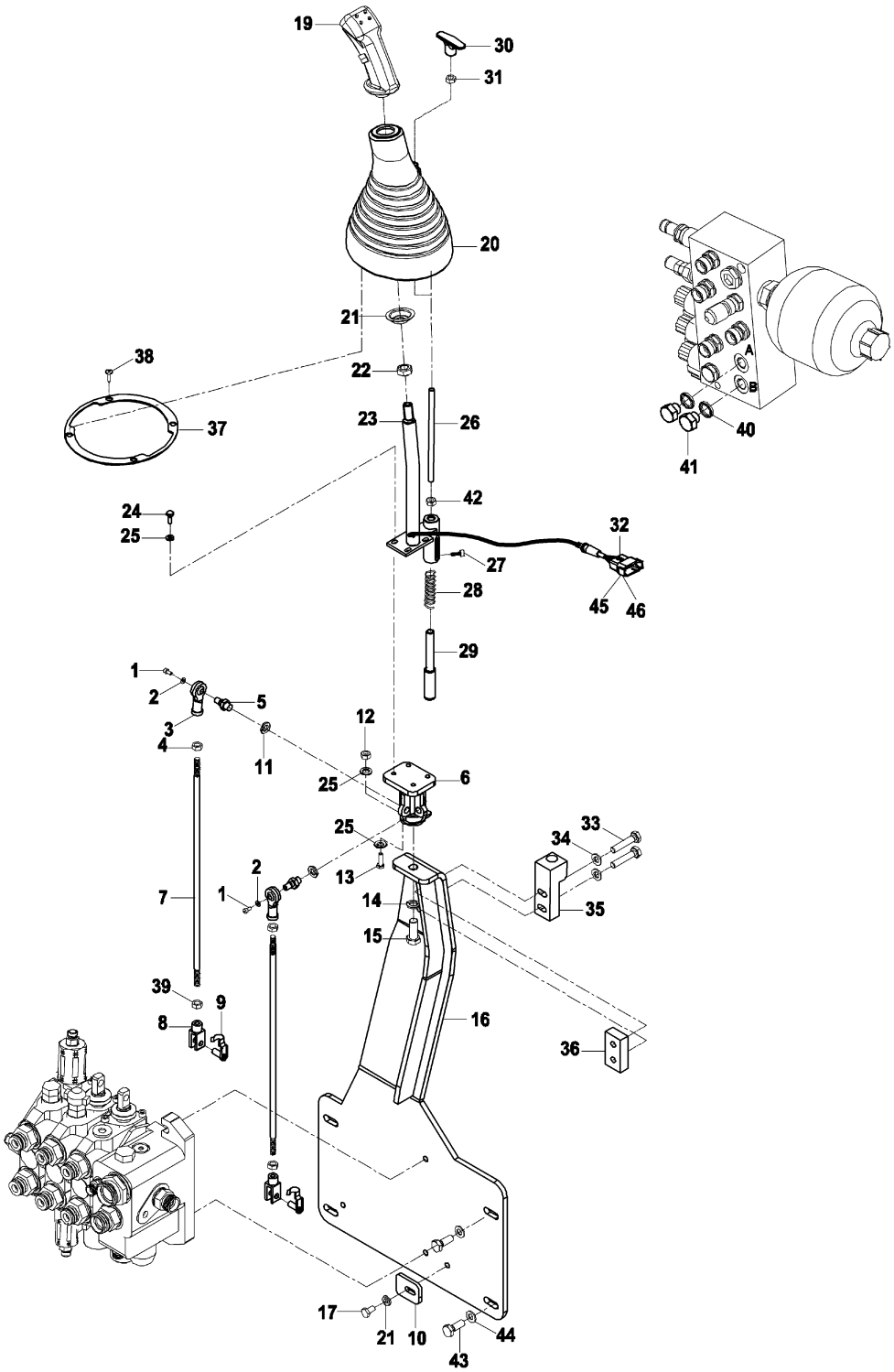

ARKA KUMANDA MEKANİZMASI (TİP B) (OP)
BACKHOE CONTROL MECHANISM (TYPE B) (OP)

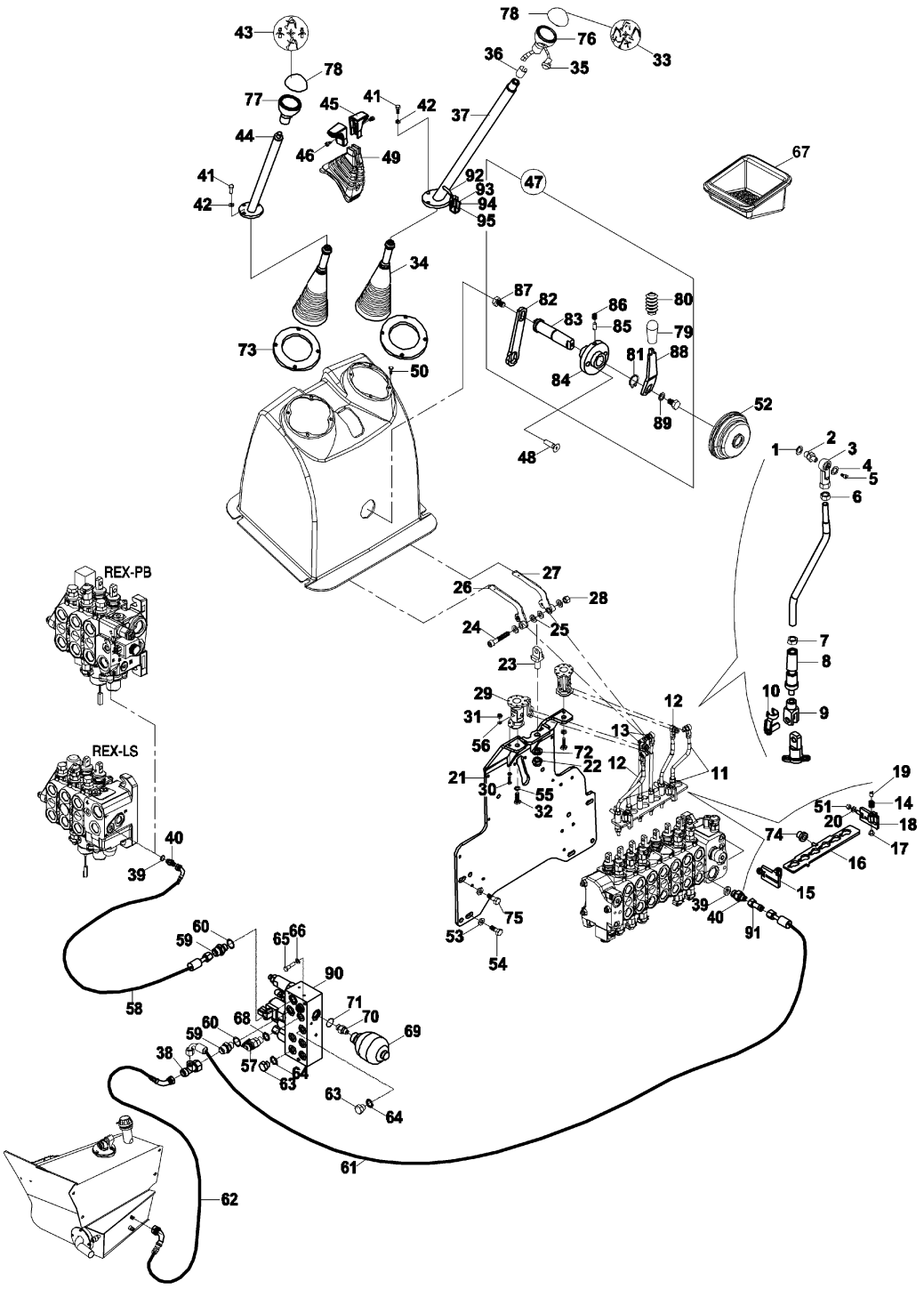

ARKA KUMANDA MEKANİZMASI (TİP B) (OP)
BACKHOE CONTROL MECHANISM (TYPE B) (OP)

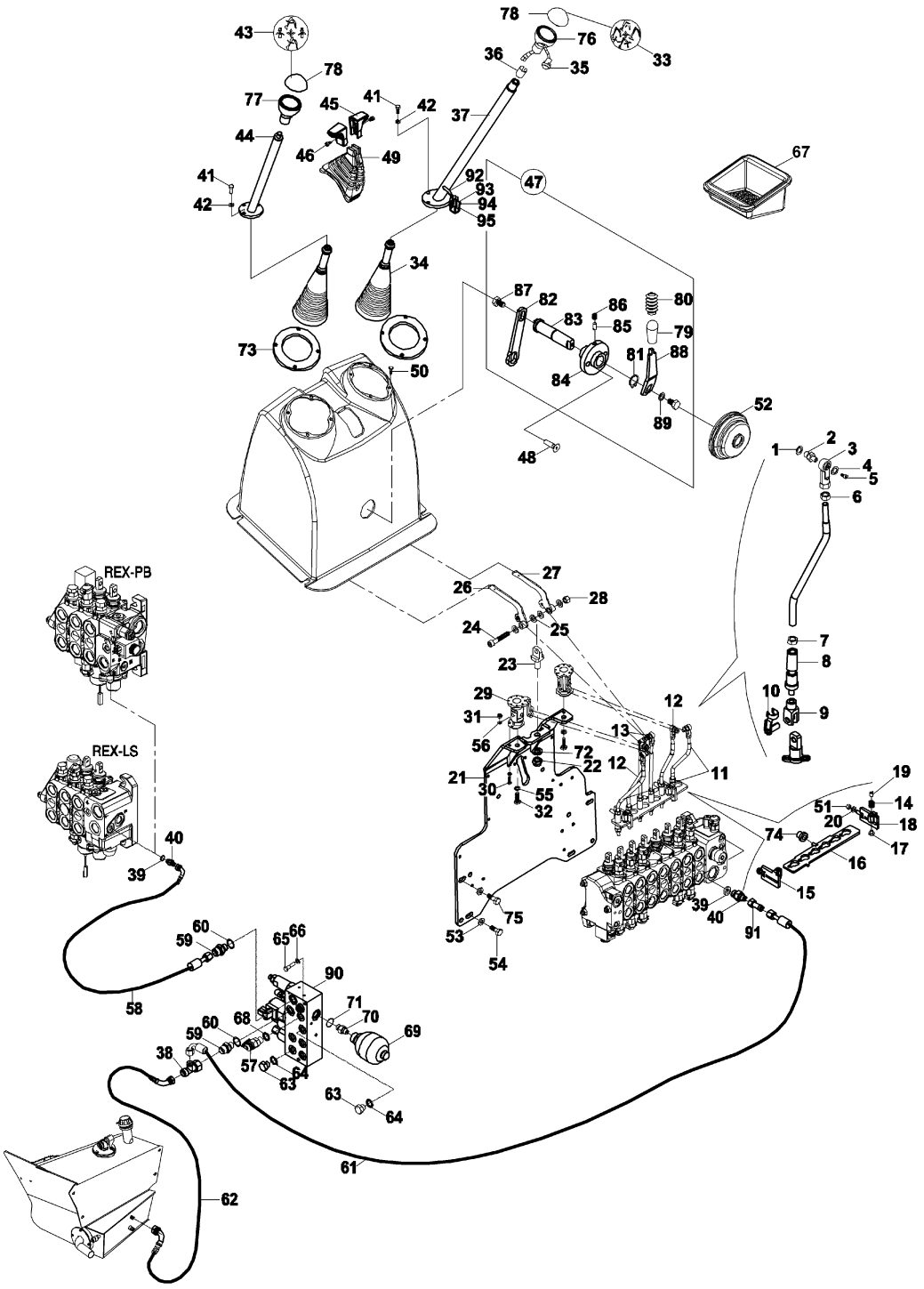

ARKA KUMANDA MEKANİZMASI (TİP B) (OP)
BACKHOE CONTROL MECHANISM (TYPE B) (OP)

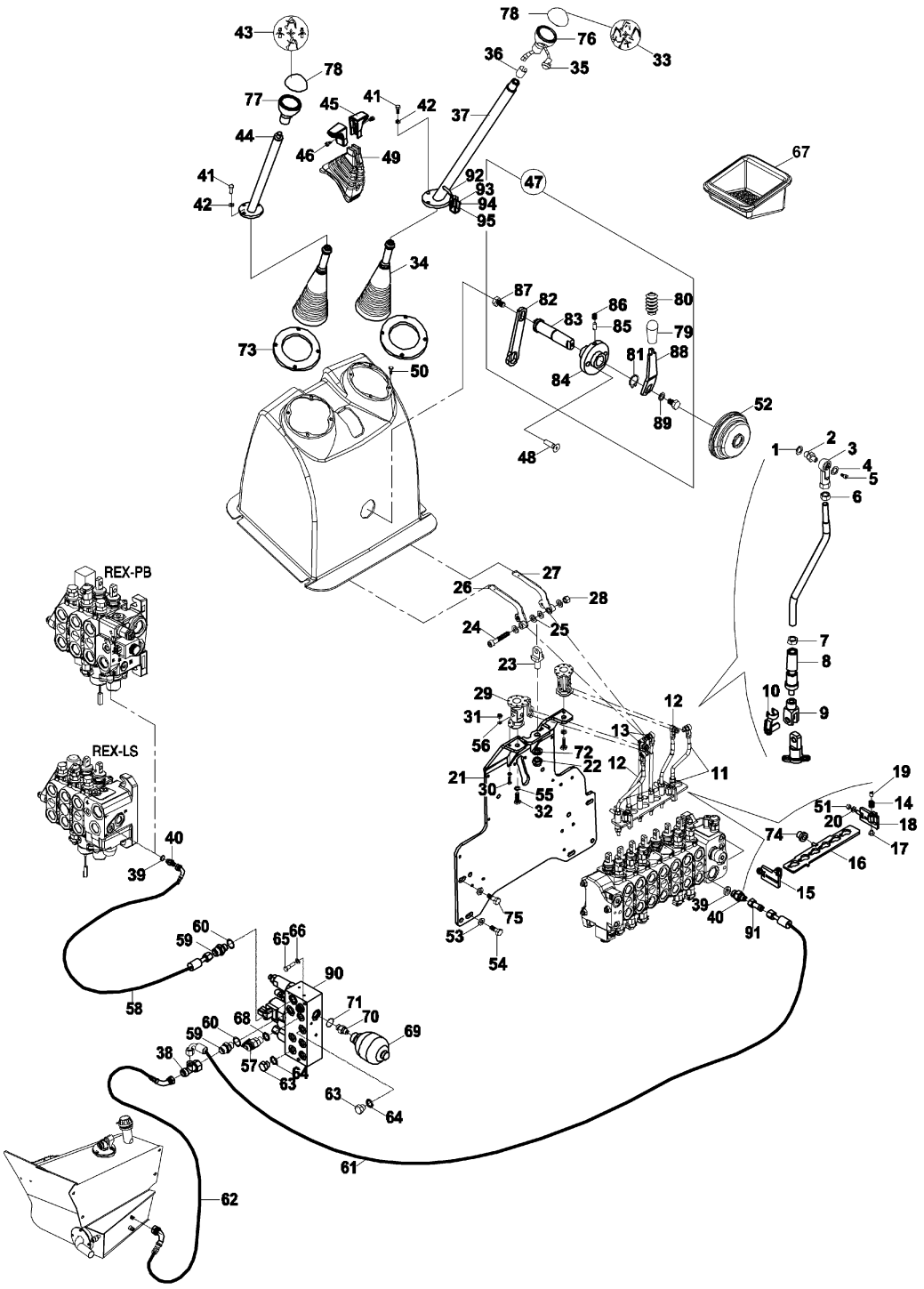

ARKA KUMANDA MEKANİZMASI (TİP B) (OP)
BACKHOE CONTROL MECHANISM (TYPE B) (OP)

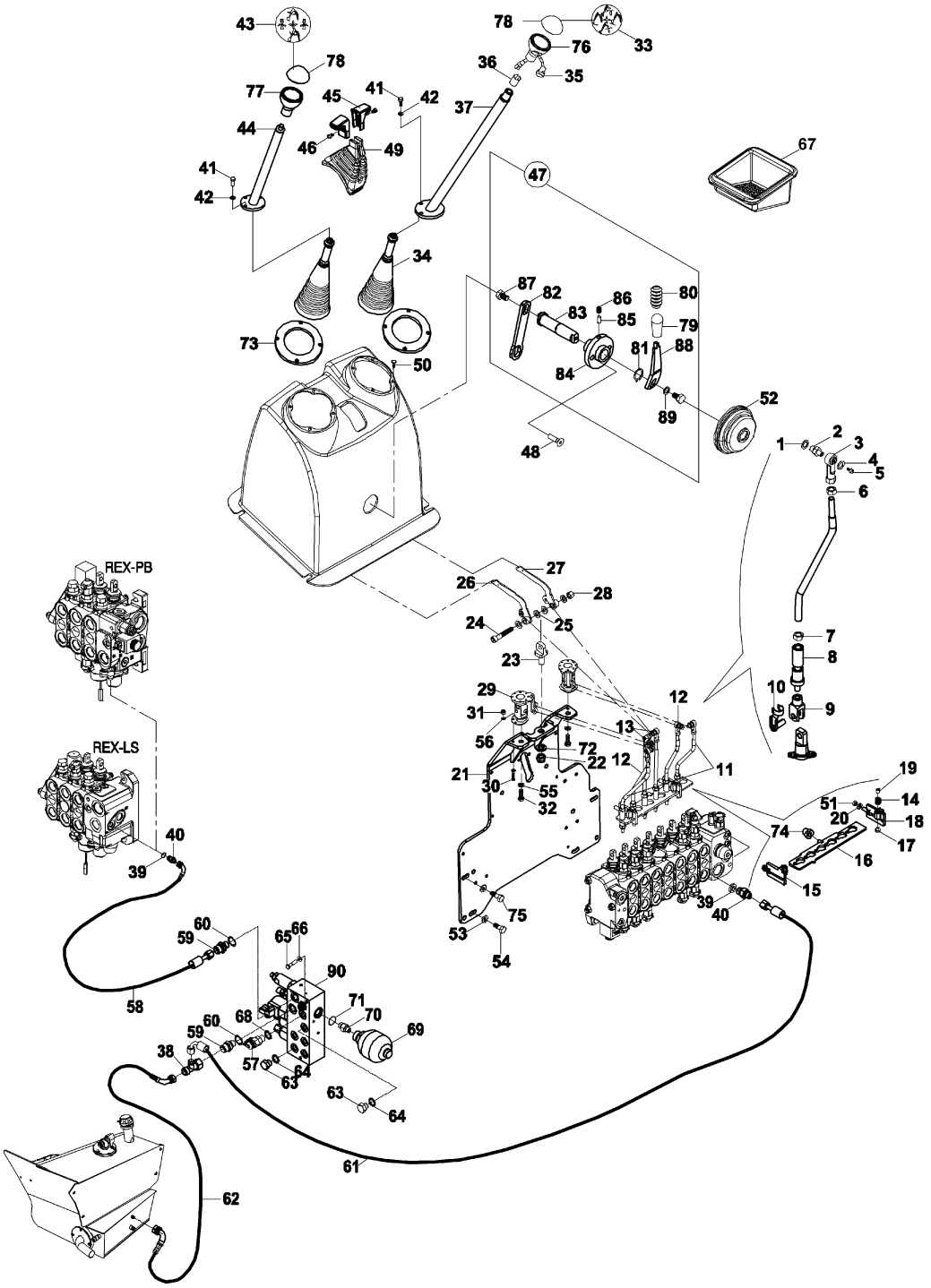

ARKA KUMANDA MEKANİZMASI (TİP B) (OP)
BACKHOE CONTROL MECHANISM (TYPE B) (OP)

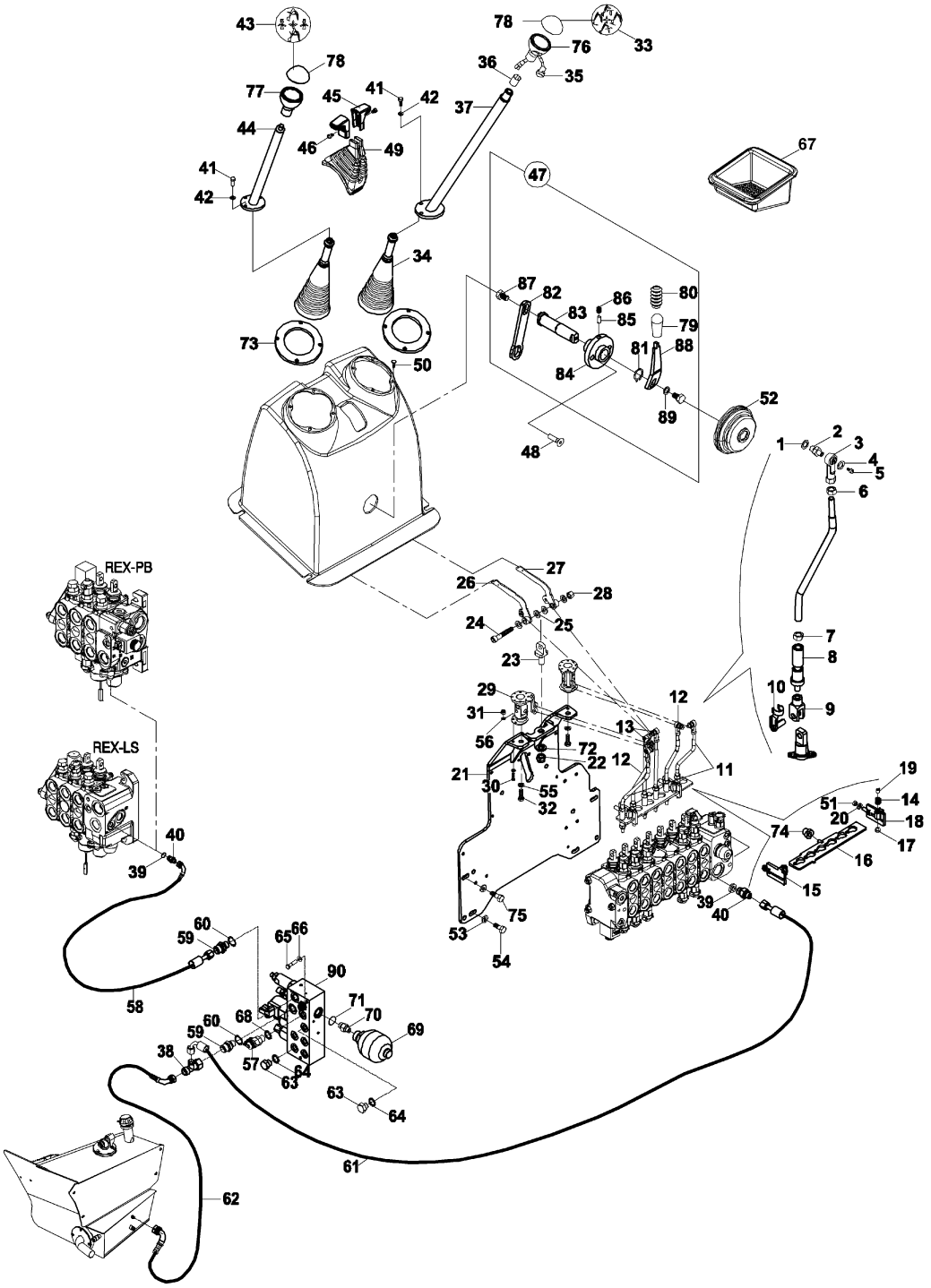

İLAVE ATAŞMAN PEDAL MONTAJI (TİPB+TB+JY)
ADDITIONAL ATTACHMENT PEDAL MOUNTING (TYPEB+TB+JY)

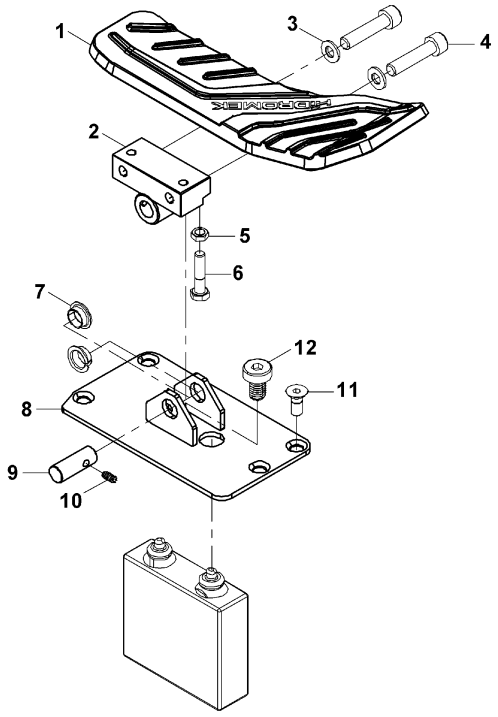

PEDAL MONTAJI, İLAVE ATAŞMAN (TİPB+TB+LV)
PEDAL MOUNTING, ADDITIONAL ATTACHMENT (TYPEB+TB+LV)

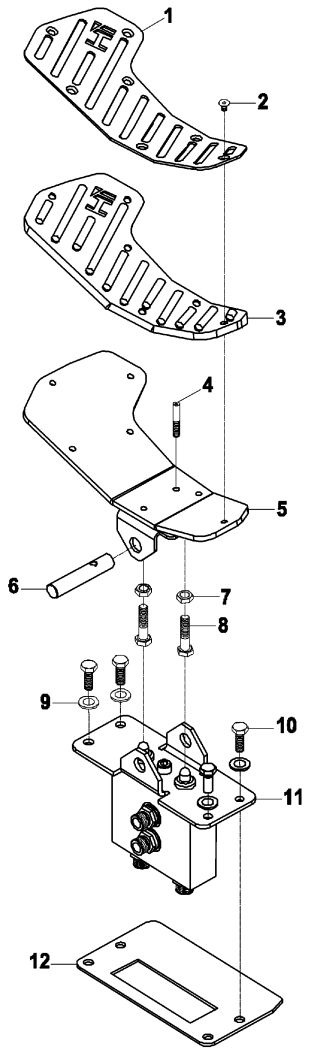

PEDAL MONTAJI, İLAVE ATAŞMAN (TİPB+NB+LV)
PEDAL MOUNTING, ADDITIONAL ATTACHMENT (TYPEB+NB+LV)

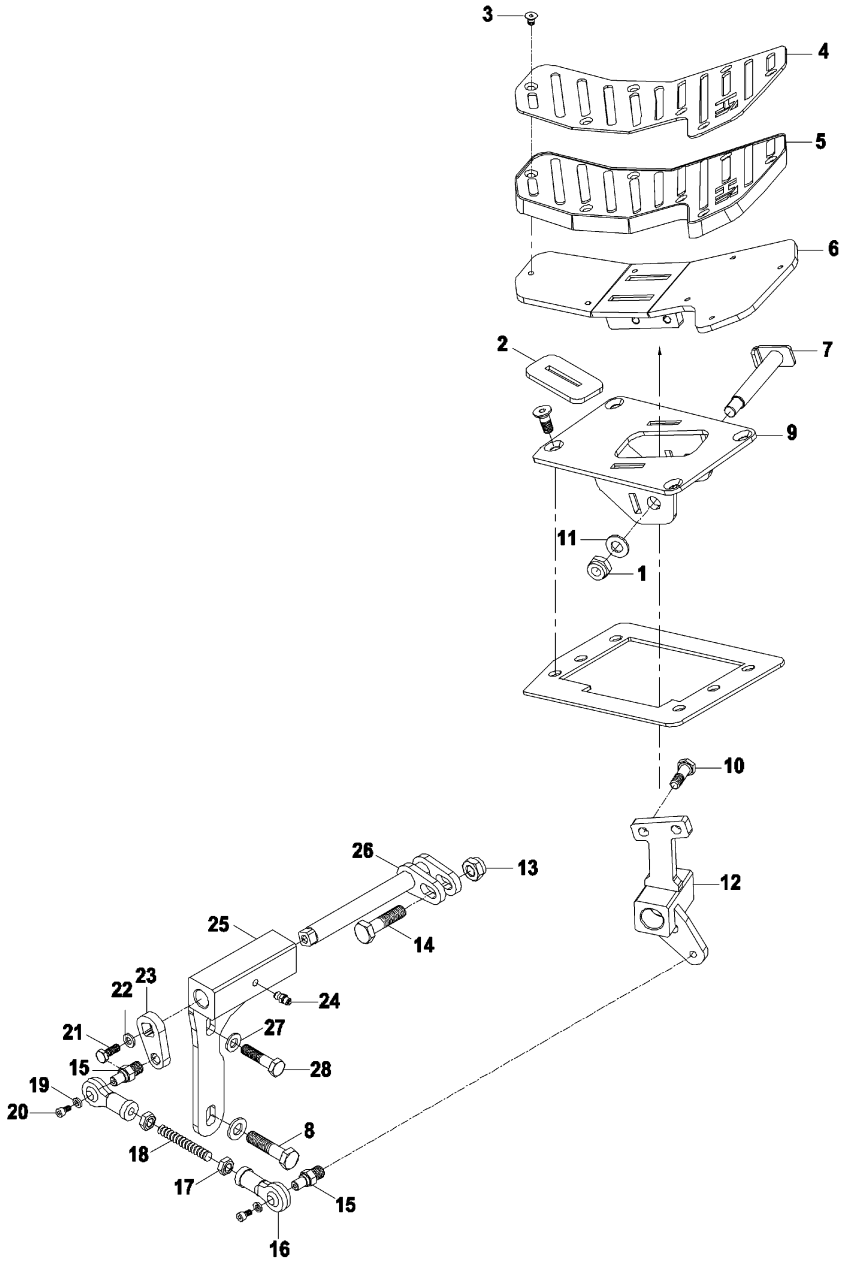

HİDROLİK TESİSAT, ANA DAĞITIM (DİŞLİ POMPA & TURNER &TİP B)
HYDRAULIC PIPING, MAIN (GEAR PUMP & TURNER & TYPE B)

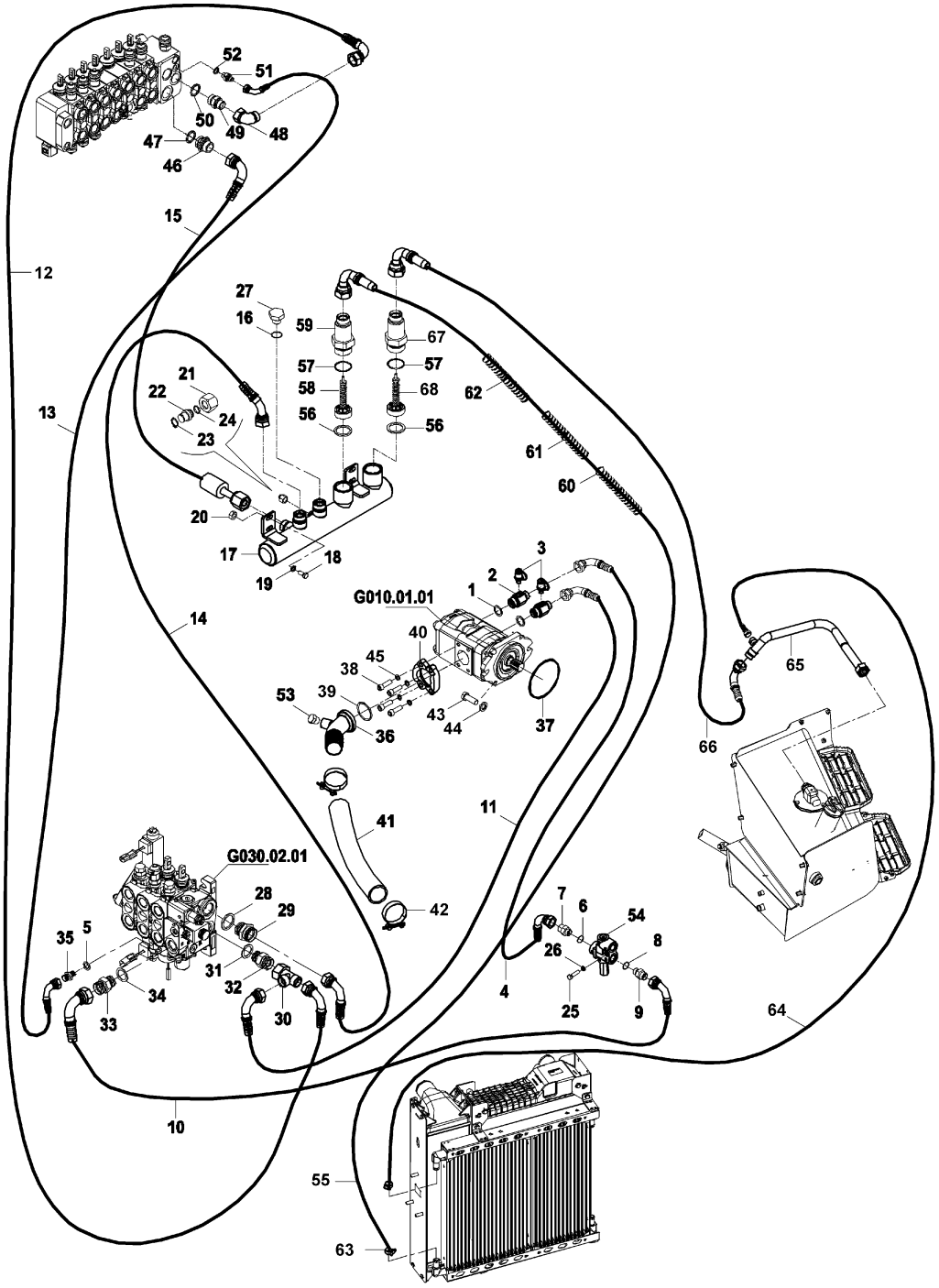

HİDROLİK TESİSAT, ANA DAĞITIM (DİŞLİ POMPA & TURNER &TİP B)
HYDRAULIC PIPING, MAIN (GEAR PUMP & TURNER & TYPE B)

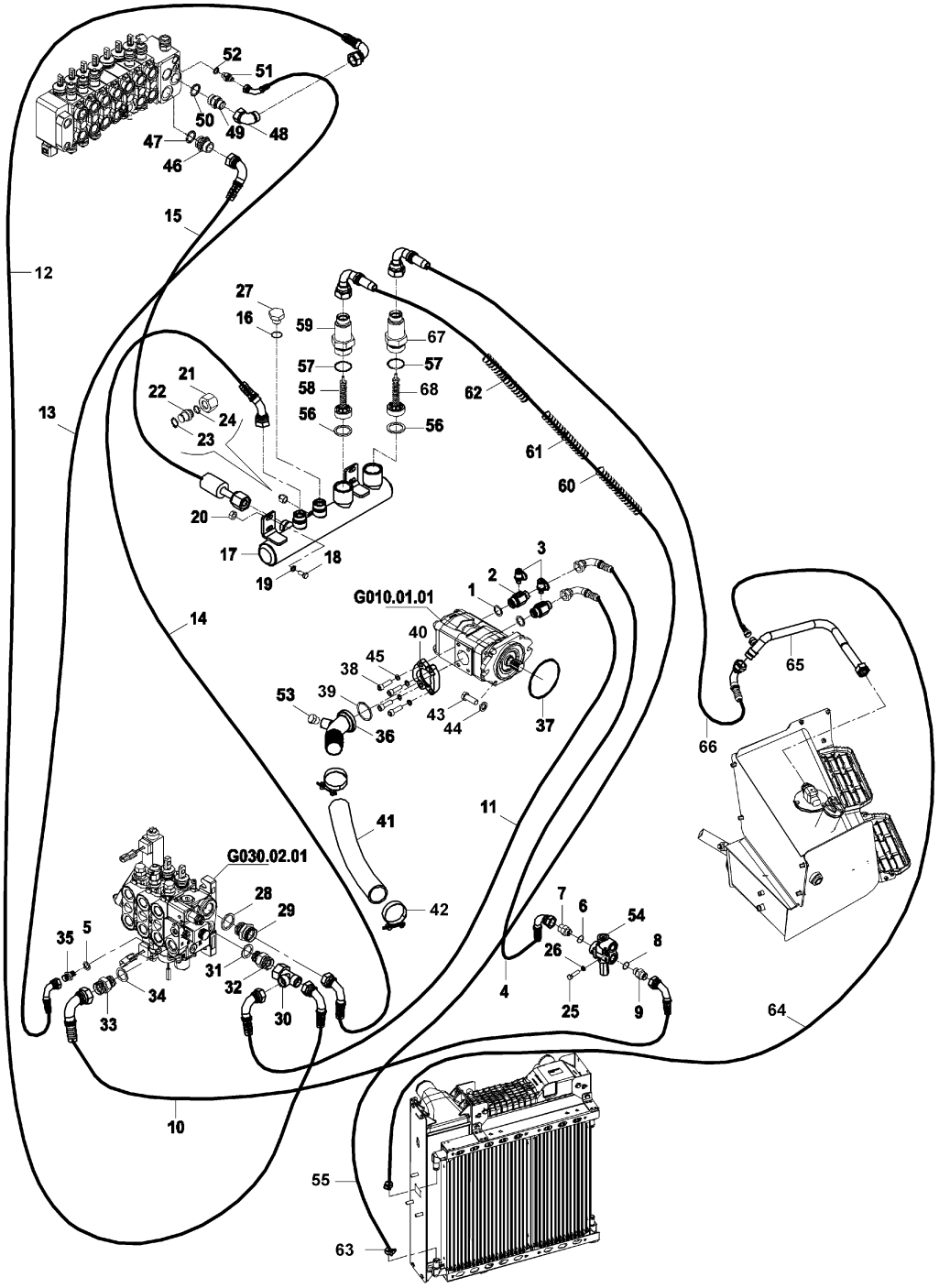

HİDROLİK TESİSAT, ANA DAĞITIM (DİŞLİ POMPA & TURNER &TİP B)
HYDRAULIC PIPING, MAIN (GEAR PUMP & TURNER & TYPE B)

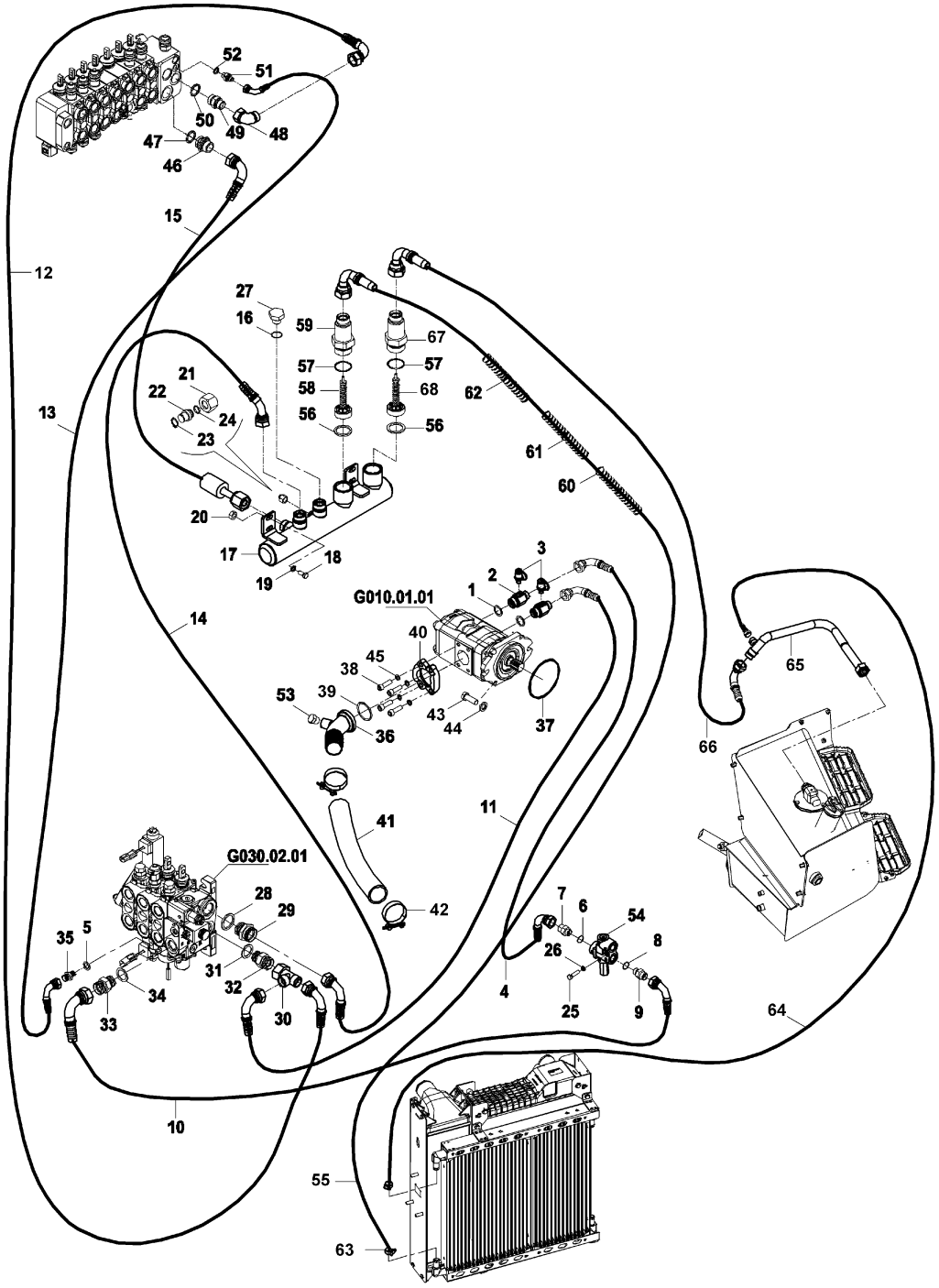

HİDROLİK TESİSAT, ANA DAĞITIM (DİŞLİ POMPA & TURNER &TİP B)
HYDRAULIC PIPING, MAIN (GEAR PUMP & TURNER & TYPE B)

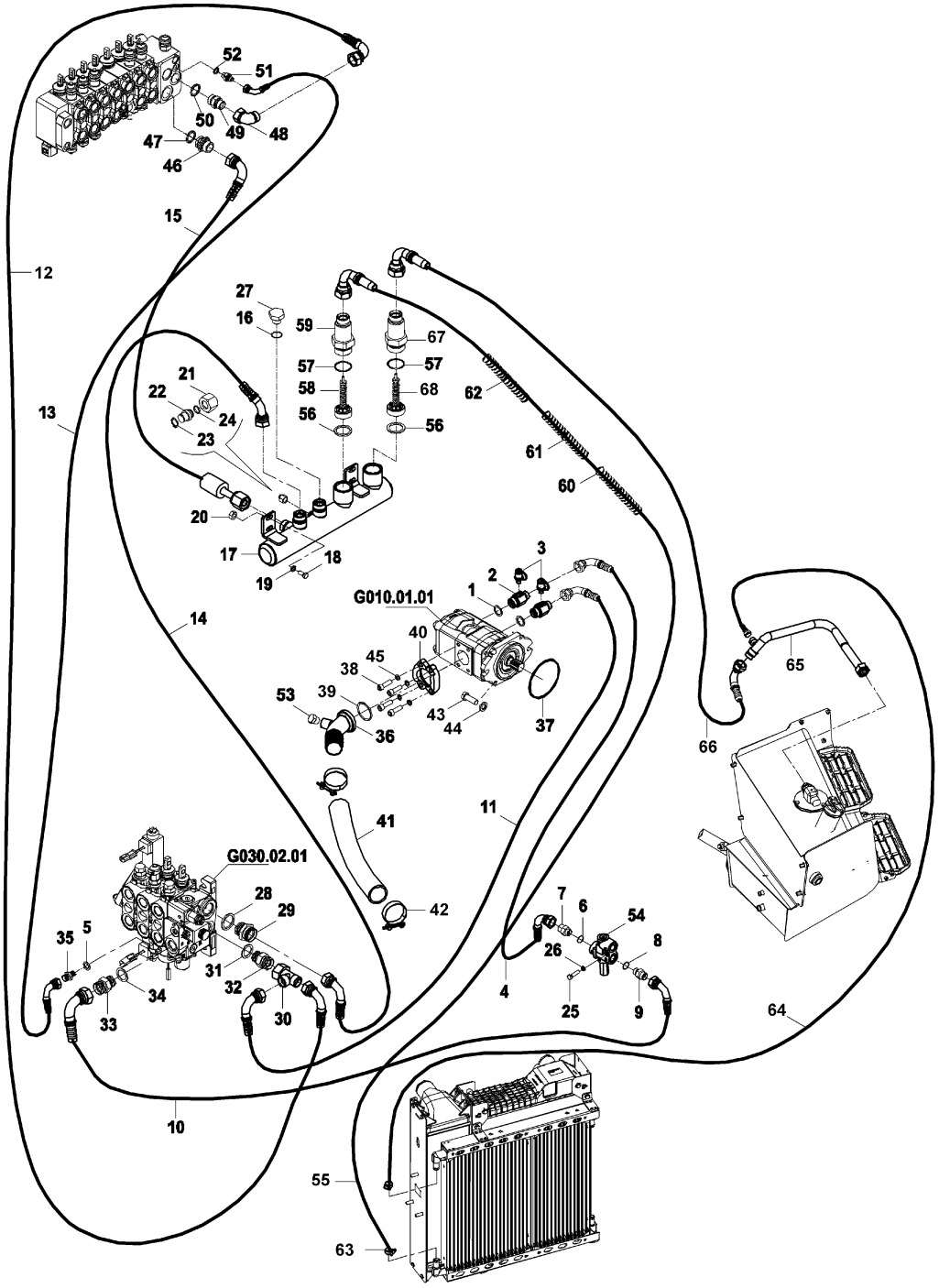

HİDROLİK TESİSAT, ANA DAĞITIM (PİSTONLU POMPA & TURNER & TİP B)
HYDRAULIC PIPING, MAIN (PISTON PUMP & TURNER & TYPE B)

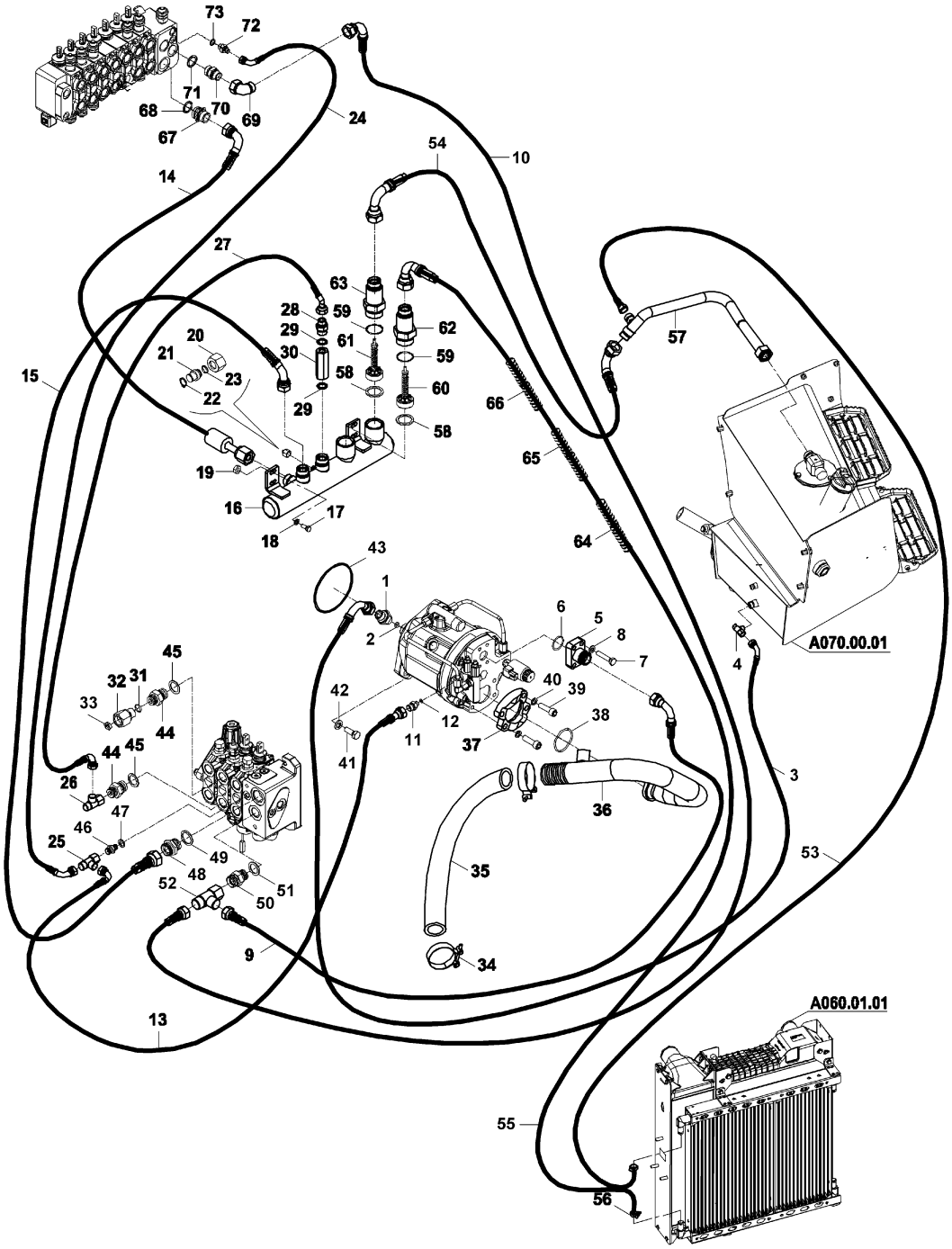

HİDROLİK TESİSAT, ANA DAĞITIM (PİSTONLU POMPA & TURNER & TİP B)
HYDRAULIC PIPING, MAIN (PISTON PUMP & TURNER & TYPE B)

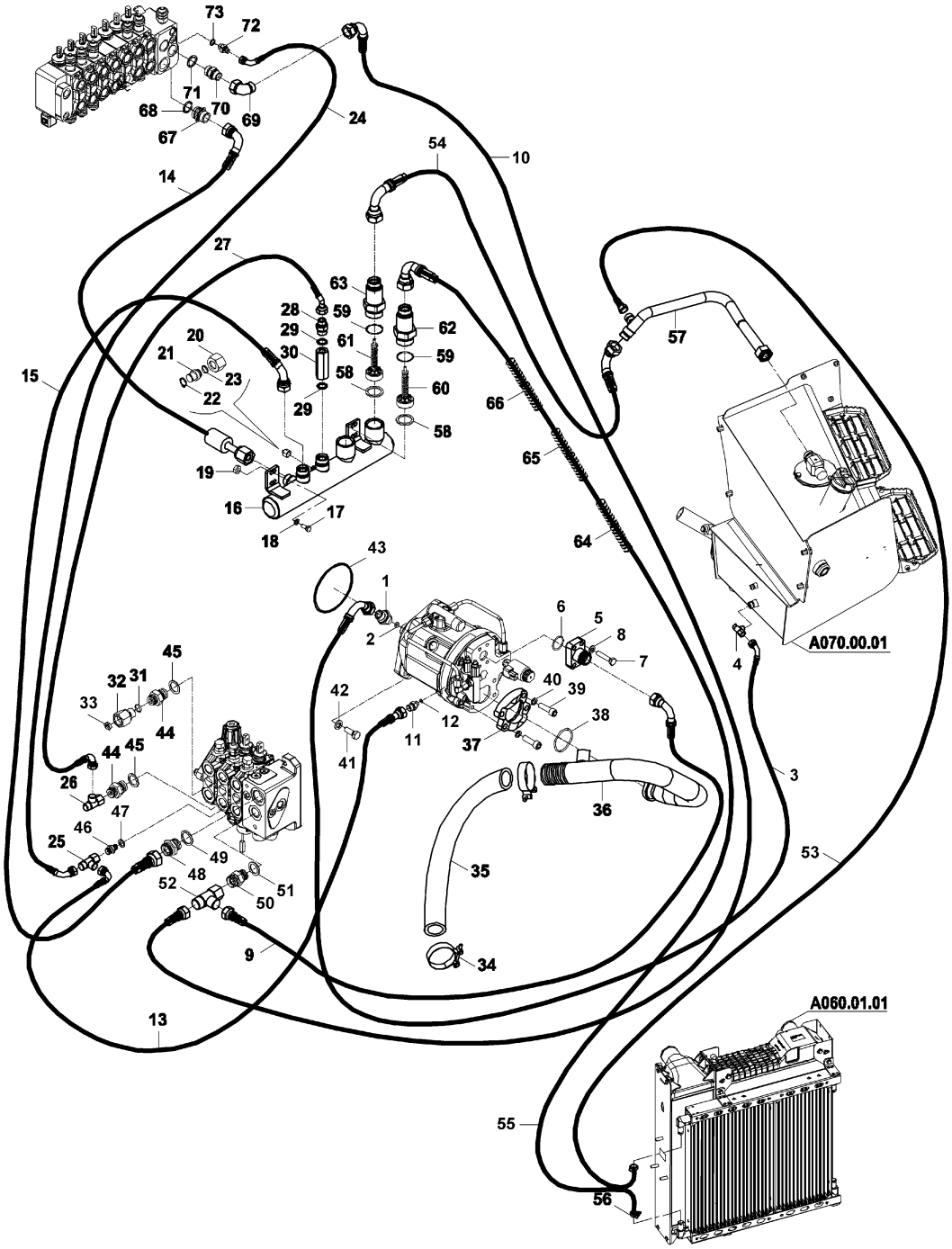

HİDROLİK TESİSAT, PİLOT (TİP B)
HYDRAULIC PIPING, PILOT (TYPE B)

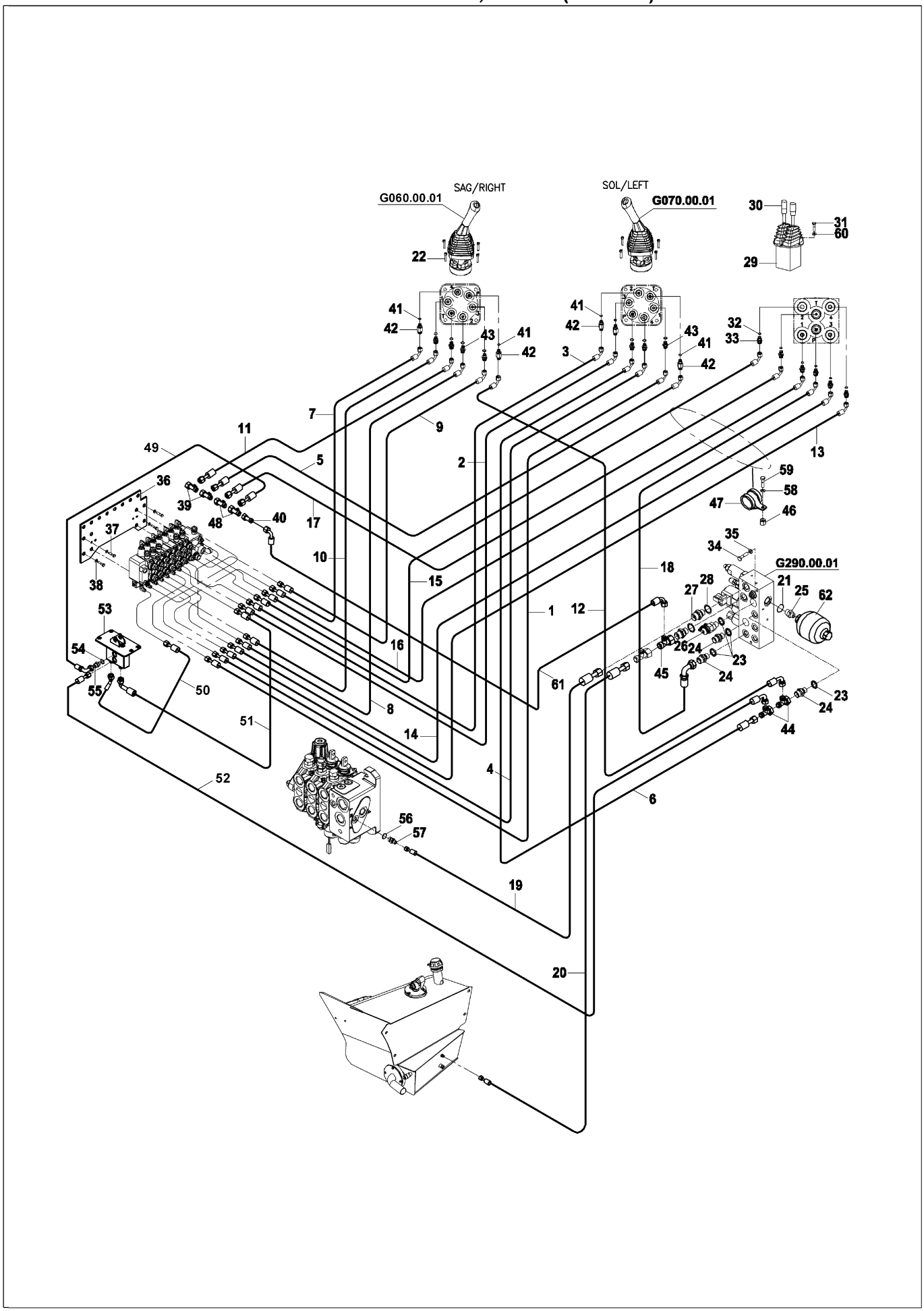

HİDROLİK TESİSAT, PİLOT (TİP B)
HYDRAULIC PIPING, PILOT (TYPE B)

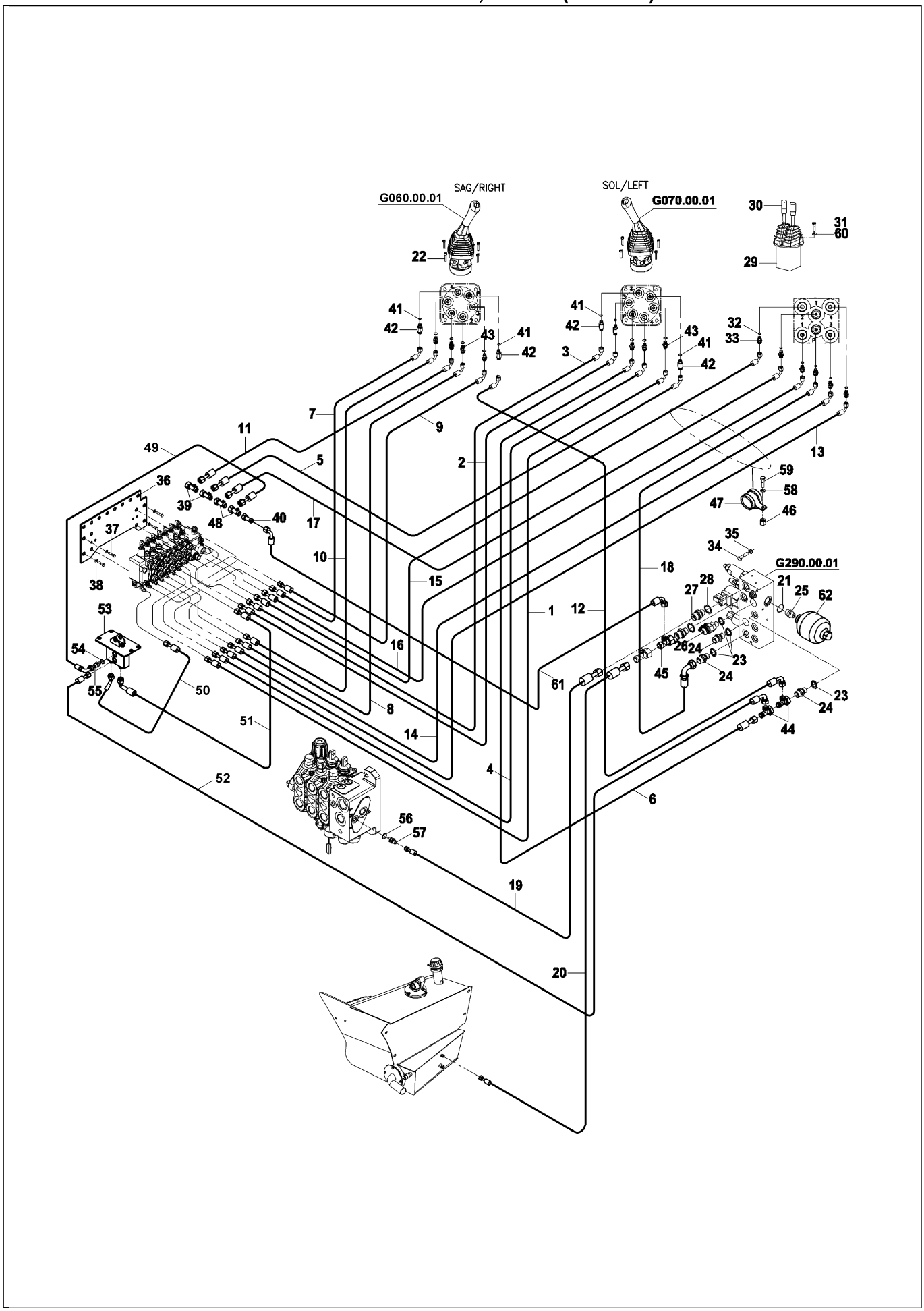

KUMANDA DEĞİŞTİRİCİ
PATTERN SHIFTER

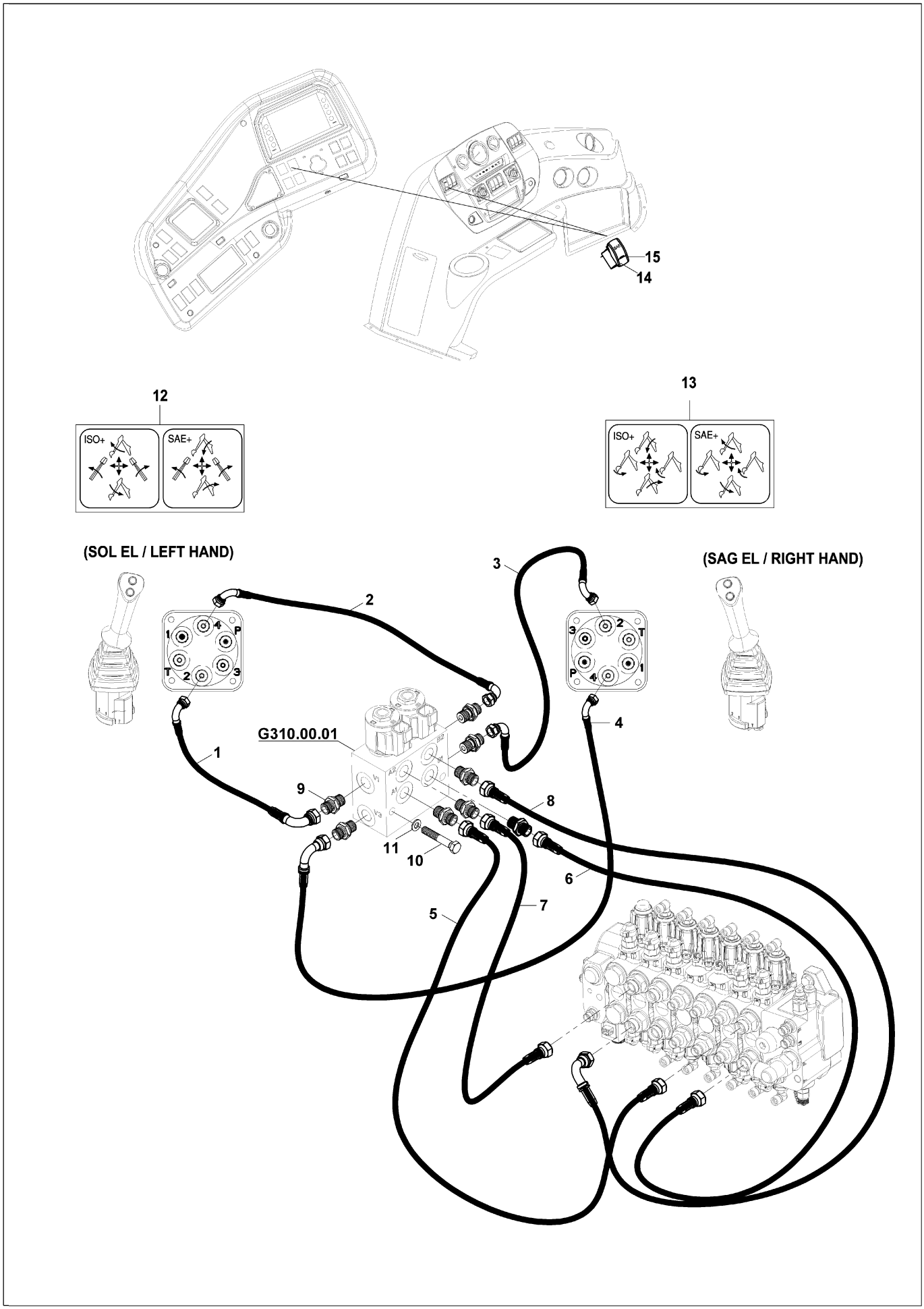

YÜKLEYİCİ HİDROLİK TESİSATI, SABİT KEPÇE (TİP B & DİŞLİ POMPA) (OP)
LOADER HYD. PIPING, SHOVEL (TYPE B & GEAR PUMP) (OP)

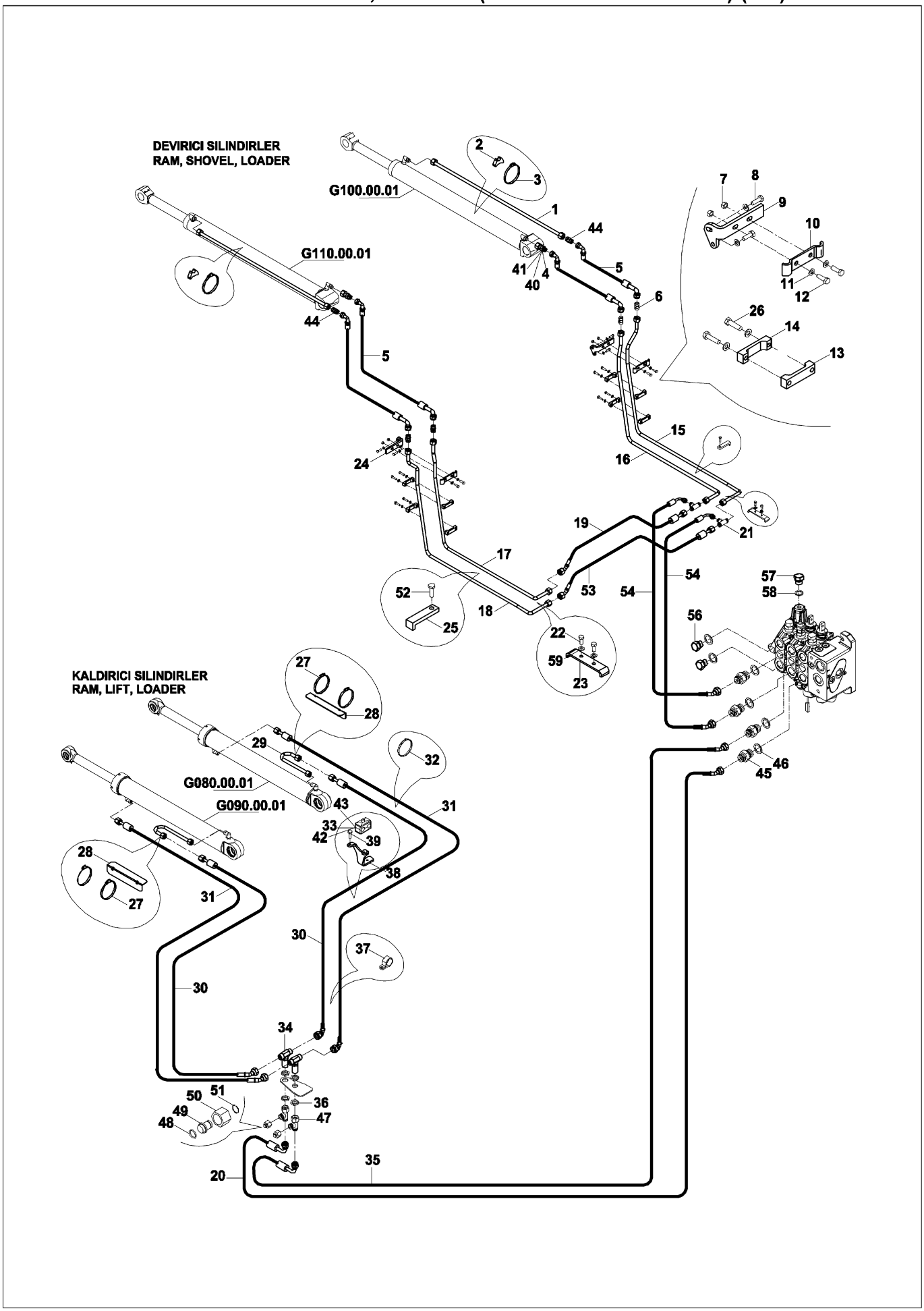

YÜKLEYİCİ HİDROLİK TESİSATI, SABİT KEPÇE (TİP B & DİŞLİ POMPA) (OP)
LOADER HYD. PIPING, SHOVEL (TYPE B & GEAR PUMP) (OP)

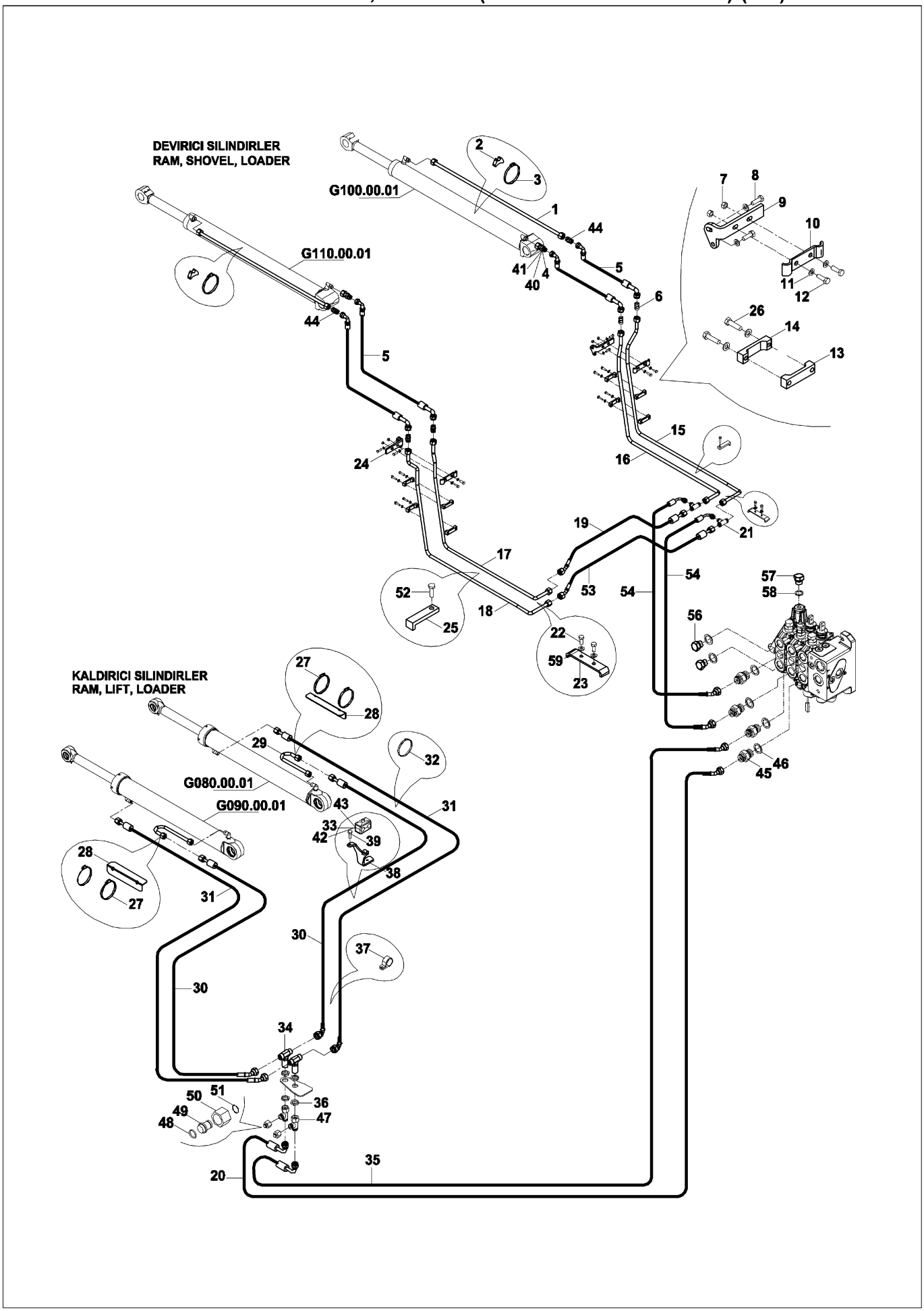

YÜKLEYİCİ HİDROLİK TESİSATI, SABİT KEPÇE (TİP B & DİŞLİ POMPA) (OP)
LOADER HYD. PIPING, SHOVEL (TYPE B & GEAR PUMP) (OP)

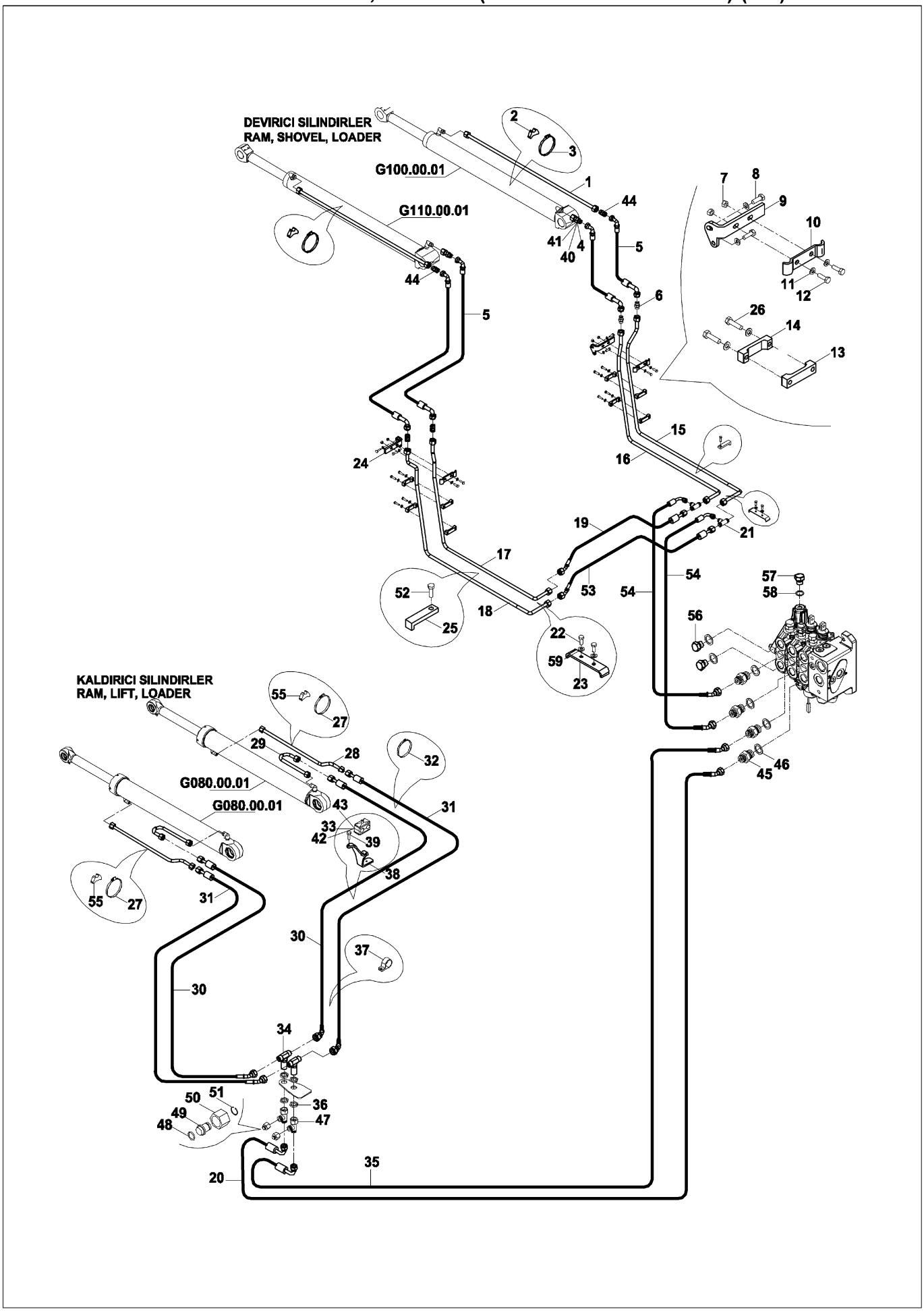

YÜKLEYİCİ HİDROLİK TESİSATI, SABİT KEPÇE (TİP B & DİŞLİ POMPA) (OP)
LOADER HYD. PIPING, SHOVEL (TYPE B & GEAR PUMP) (OP)

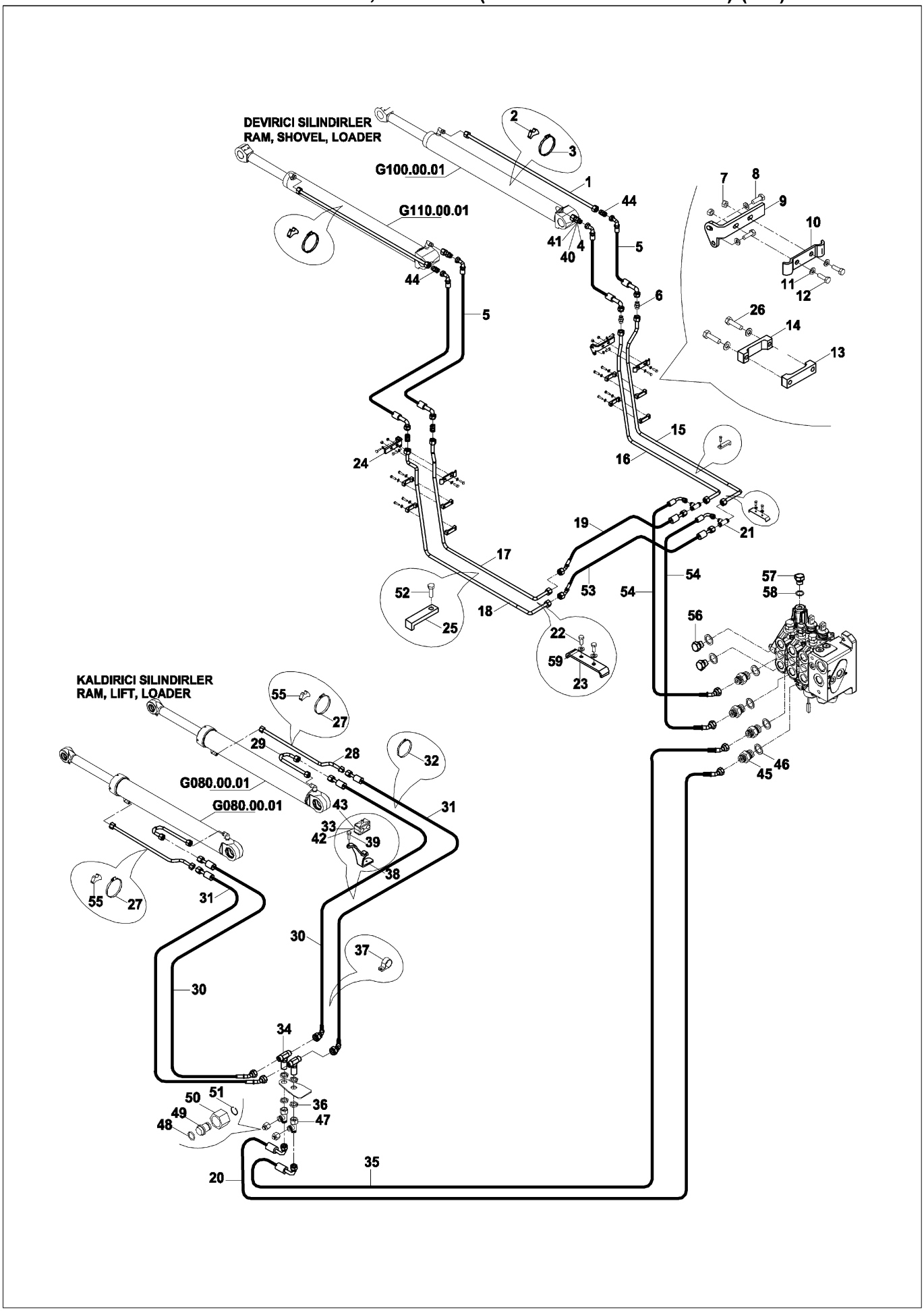

YÜKLEYİCİ HİDROLİK TESİSATI, AÇILIR KEPÇE (TİP B & DİŞLİ POMPA) (OP)
LOADER HYD. PIPING, MULTIPURPOSE BUCKET (TYPE B & GEAR PUMP) (OP)

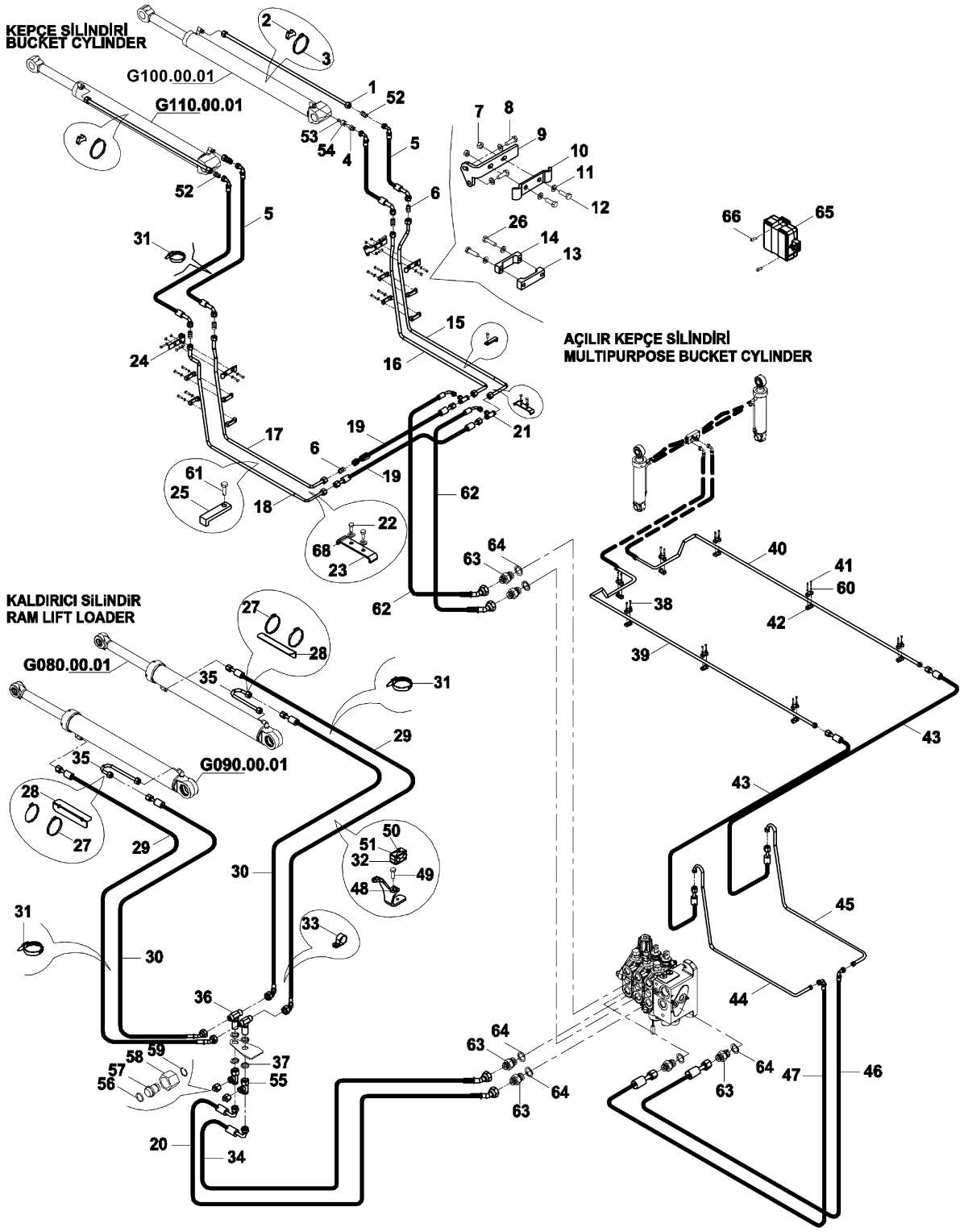

YÜKLEYİCİ HİDROLİK TESİSATI, AÇILIR KEPÇE (TİP B & DİŞLİ POMPA) (OP)
LOADER HYD. PIPING, MULTIPURPOSE BUCKET (TYPE B & GEAR PUMP) (OP)

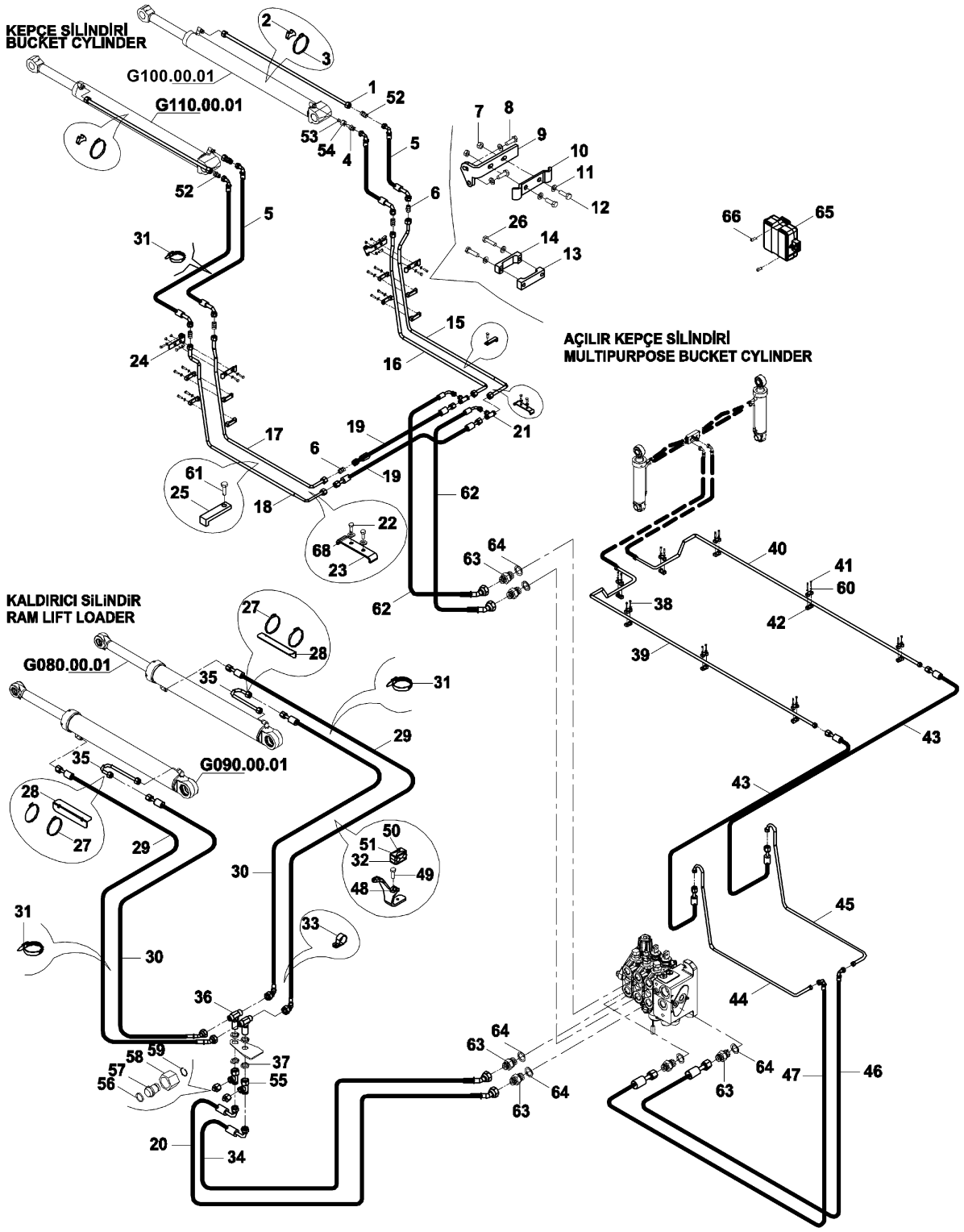

YÜKLEYİCİ HİDROLİK TESİSATI, AÇILIR KEPÇE (TİP B & DİŞLİ POMPA) (OP)
LOADER HYD. PIPING, MULTIPURPOSE BUCKET (TYPE B & GEAR PUMP) (OP)

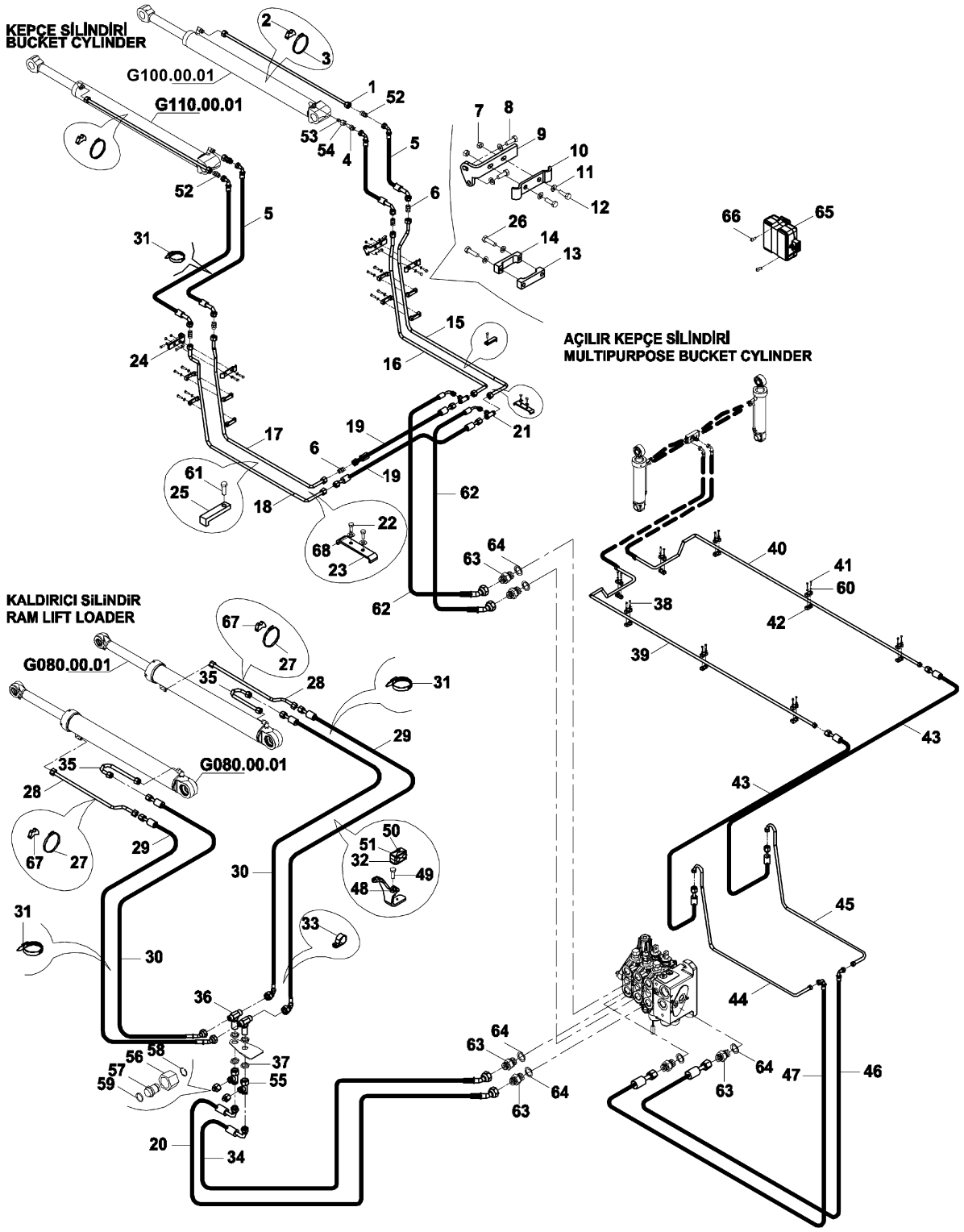

YÜKLEYİCİ HİDROLİK TESİSATI, AÇILIR KEPÇE (TİP B & DİŞLİ POMPA) (OP)
LOADER HYD. PIPING, MULTIPURPOSE BUCKET (TYPE B & GEAR PUMP) (OP)

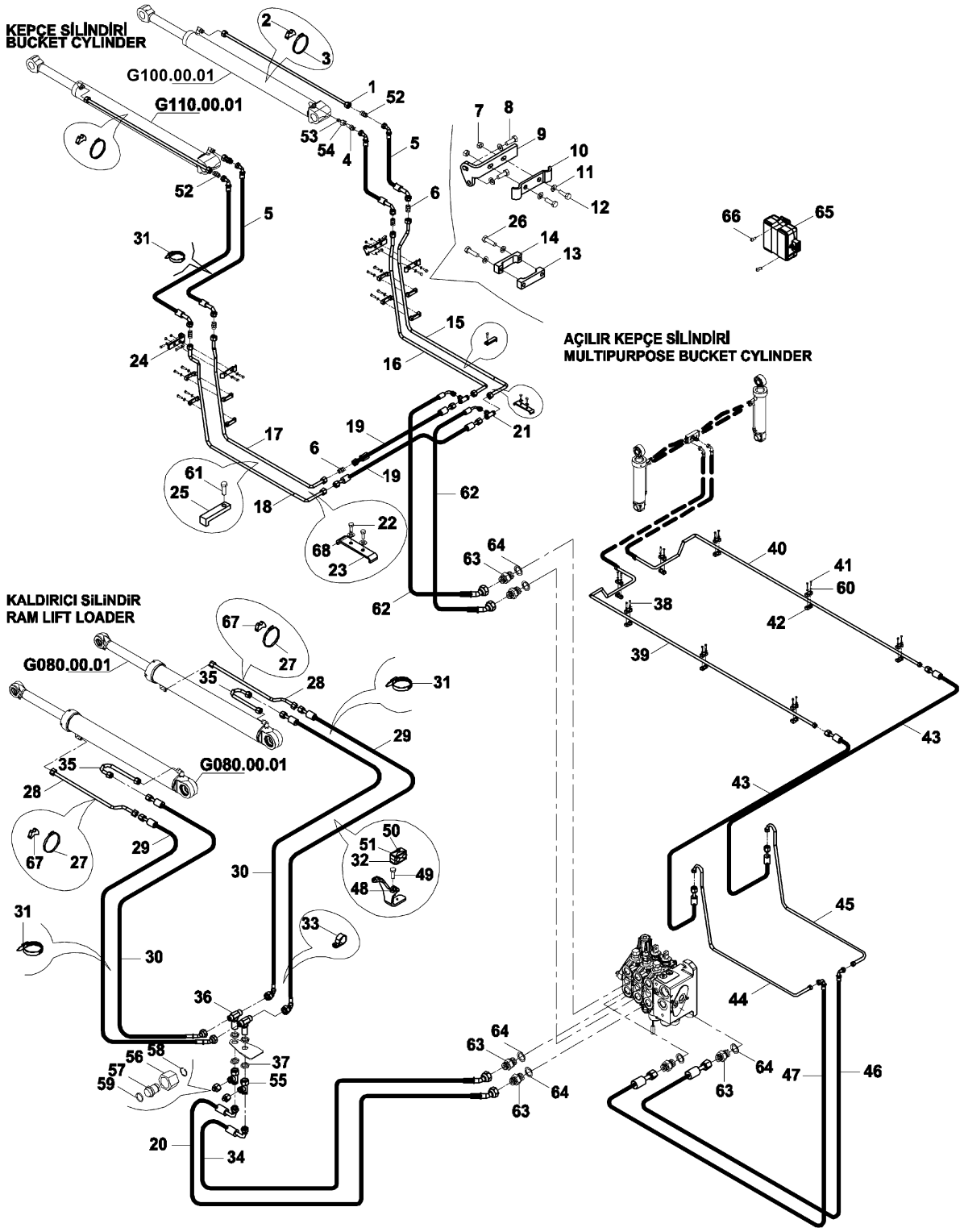

YÜKLEYİCİ HİDROLİK TESİSATI, KALDIRICI SİLİNDİR, EMNİYET VALFİ
LOADER HYDRAULIC PIPING, LIFT CYLINDER, WITH PROTECTION VALVE

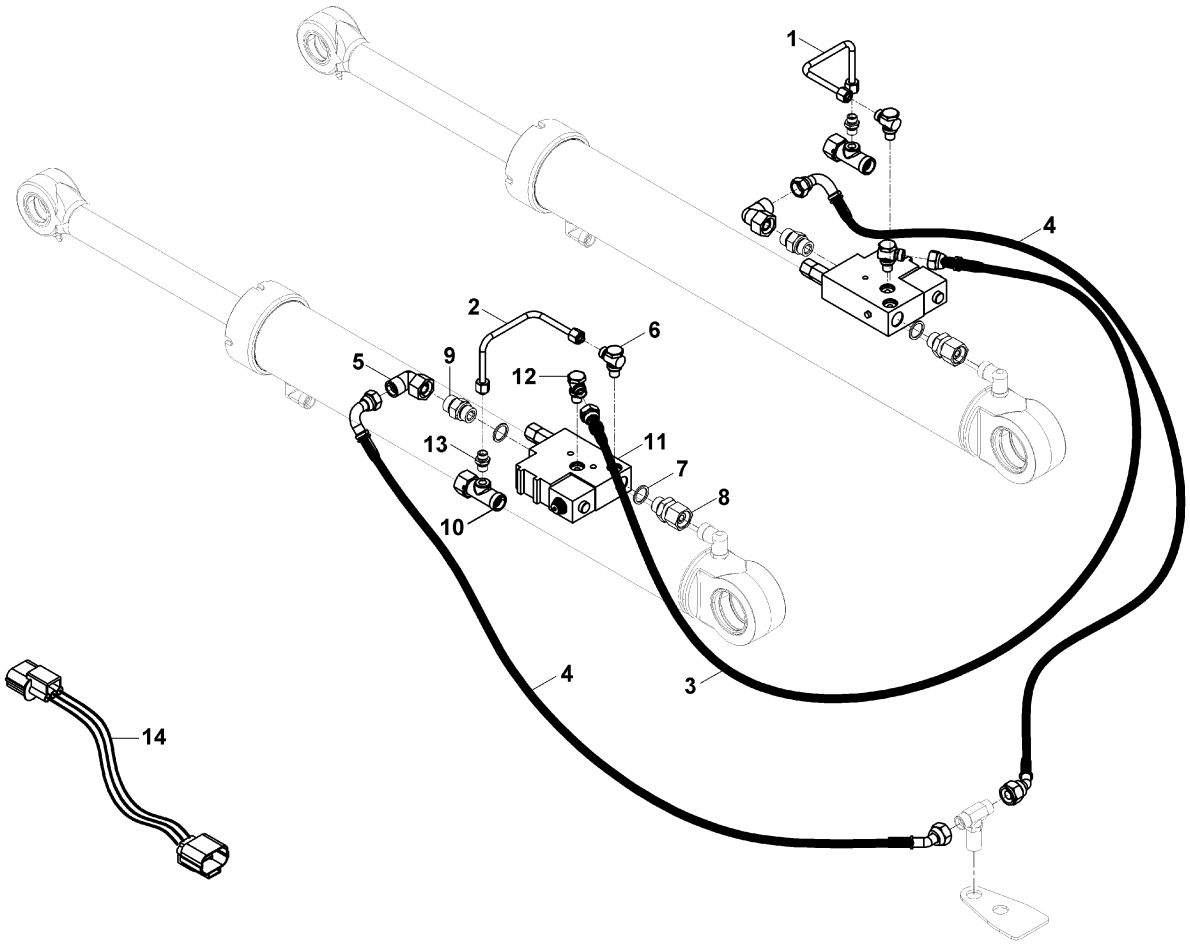

YÜKLEYİCİ HİDROLİK TESİSATI, KEPÇE SİLİNDİR, EMNİYET VALFİ
LOADER HYDRAULIC PIPING, SHOVEL CYLINDER, WITH PROTECTION VALVE

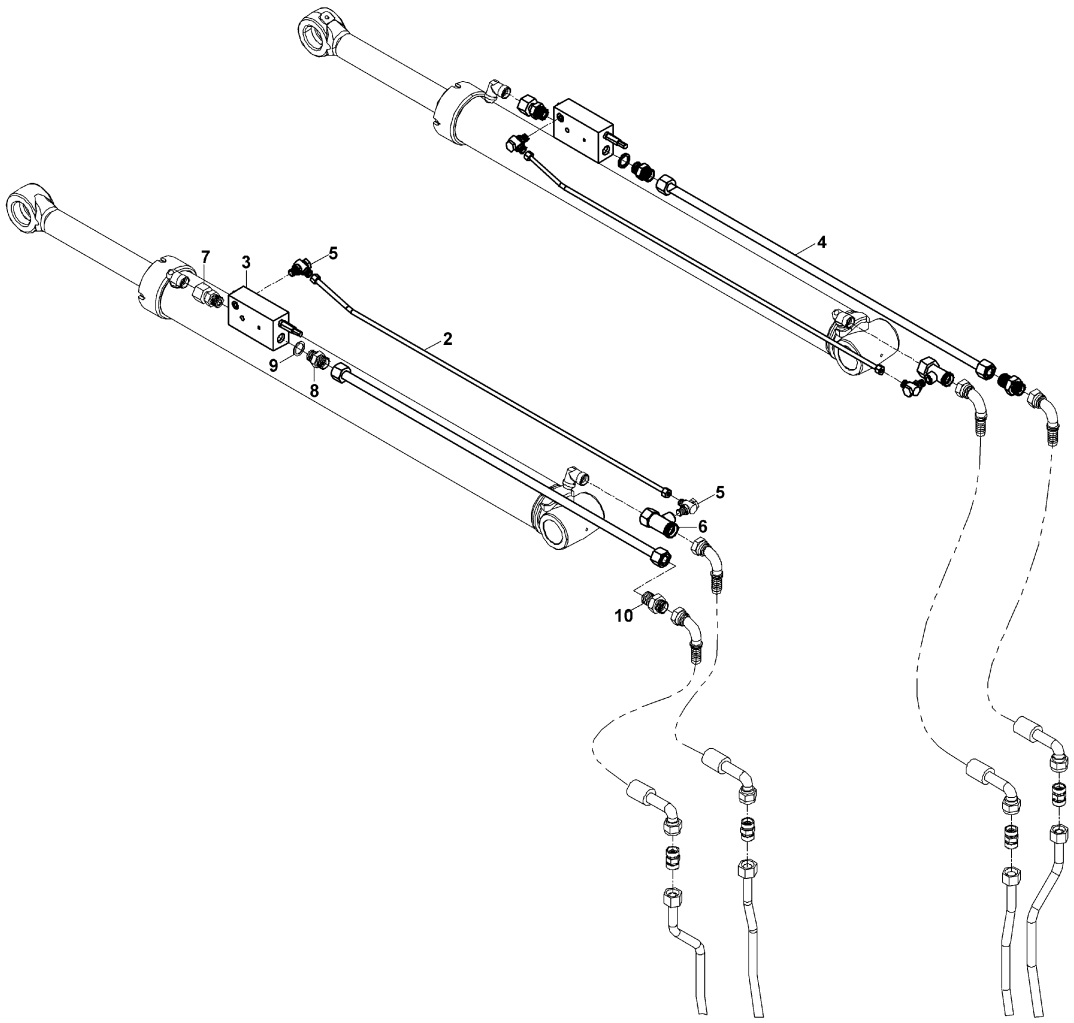

YÜKLEYİCİ HİDROLİK TESİSATI, MSS
LOADER HYDRAULIC PIPING, MSS

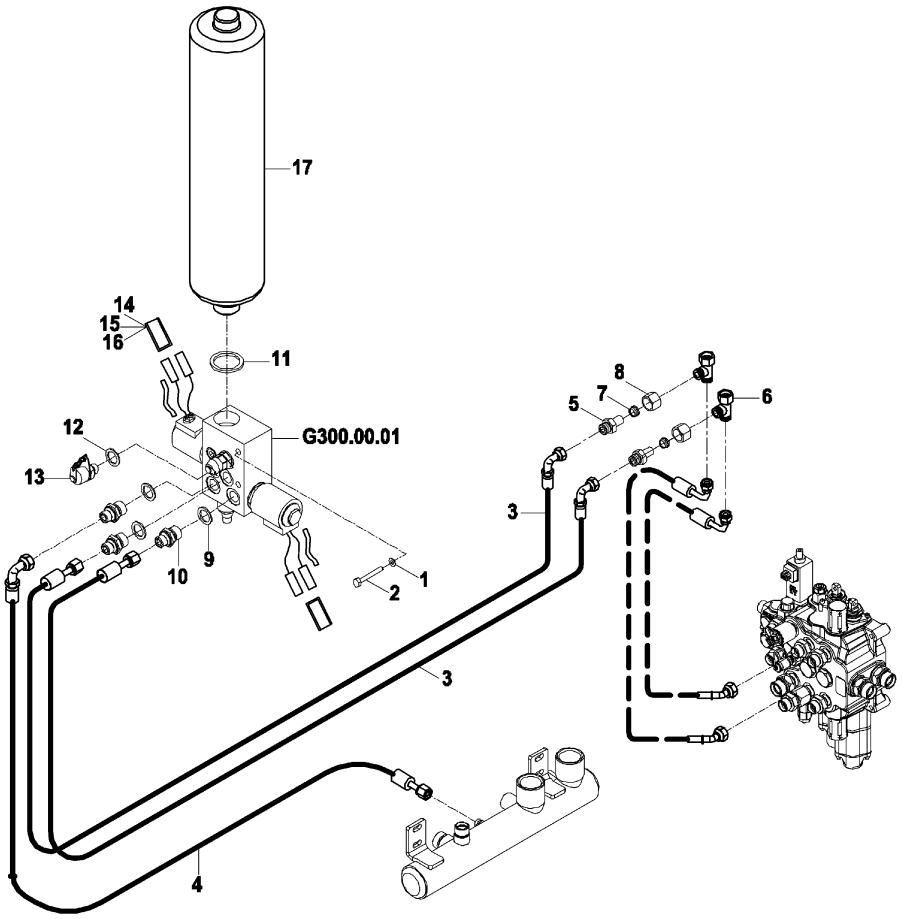

YÜKLEYİCİ HİDROLİK TESİSATI, SABİT KEPÇE (TİP B & PİSTONLU POMPA) (OP)
LOADER HYD. PIPING, SHOVEL (TYPE B & PISTON PUMP) (OP)

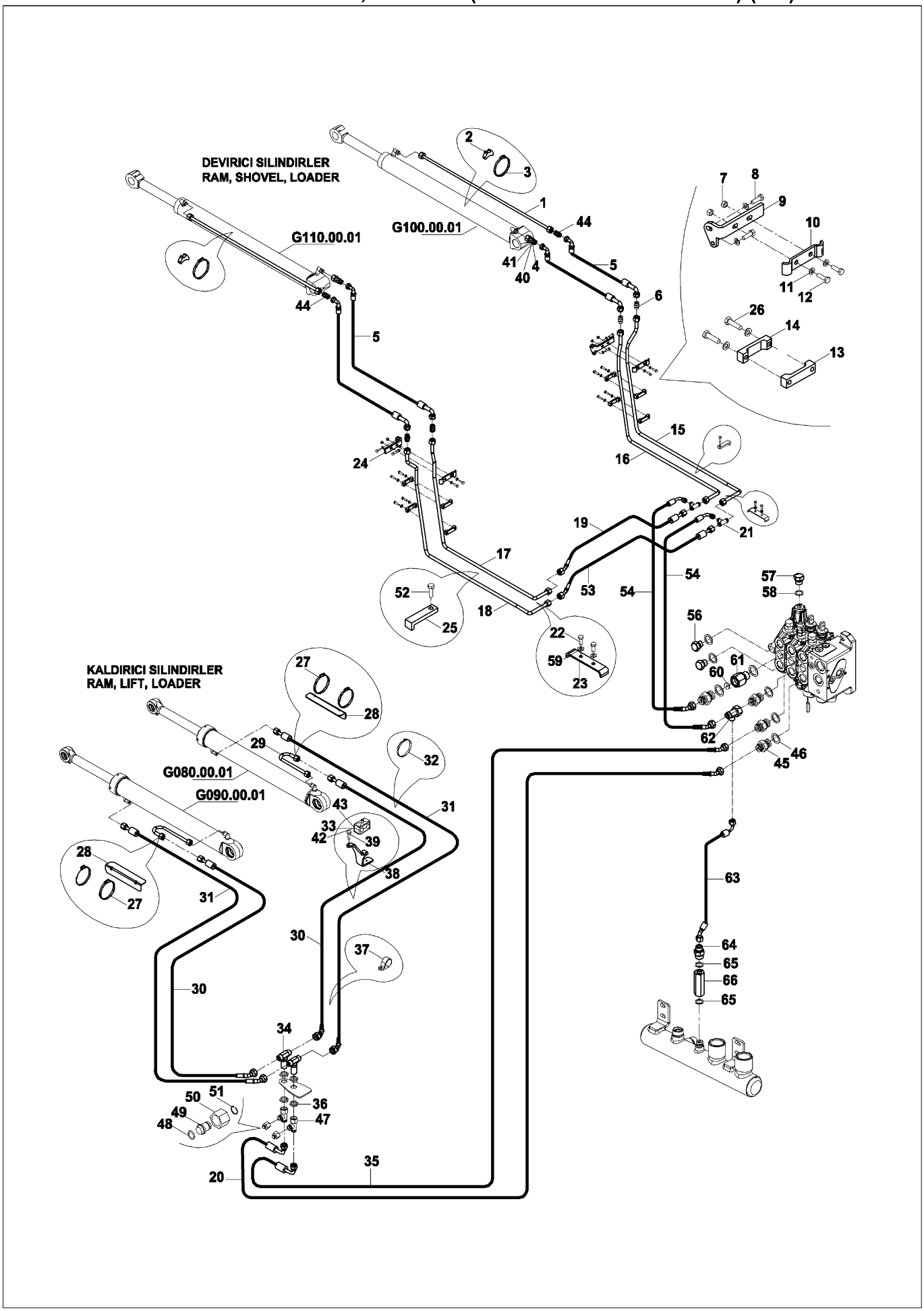

YÜKLEYİCİ HİDROLİK TESİSATI, SABİT KEPÇE (TİP B & PİSTONLU POMPA) (OP)
LOADER HYD. PIPING, SHOVEL (TYPE B & PISTON PUMP) (OP)

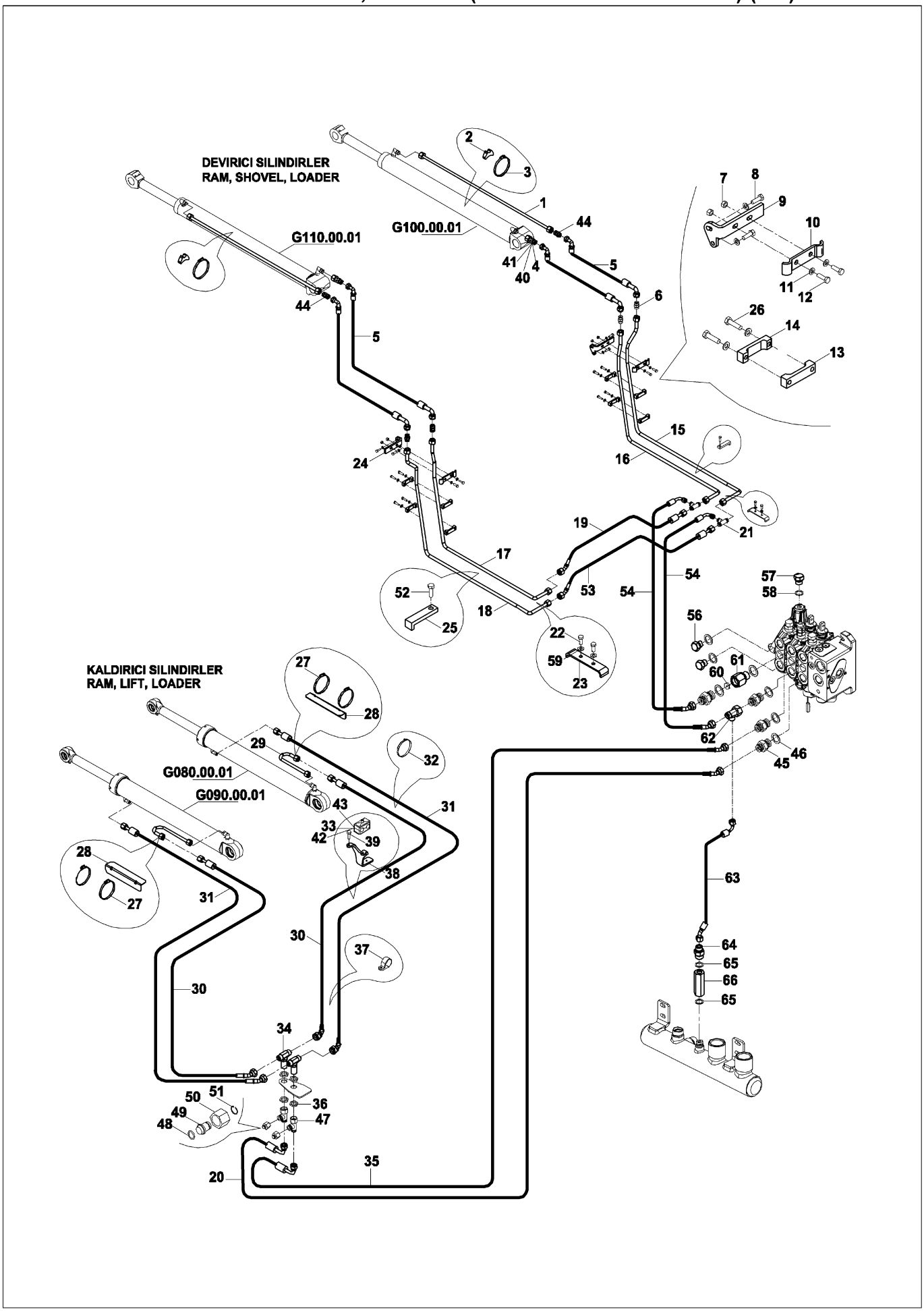

YÜKLEYİCİ HİDROLİK TESİSATI, SABİT KEPÇE (TİP B & PİSTONLU POMPA) (OP)
LOADER HYD. PIPING, SHOVEL (TYPE B & PISTON PUMP) (OP)

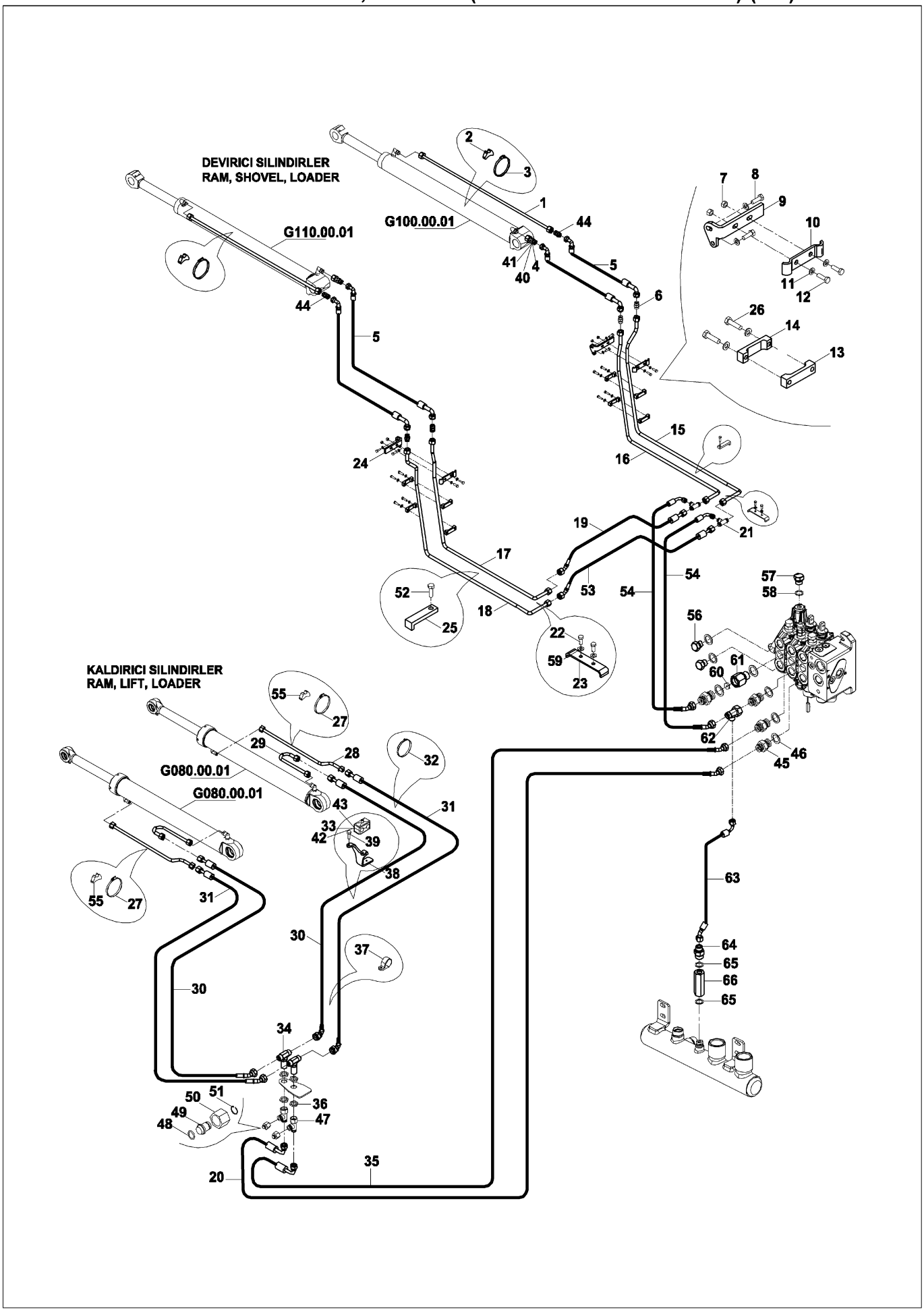

YÜKLEYİCİ HİDROLİK TESİSATI, SABİT KEPÇE (TİP B & PİSTONLU POMPA) (OP)
LOADER HYD. PIPING, SHOVEL (TYPE B & PISTON PUMP) (OP)

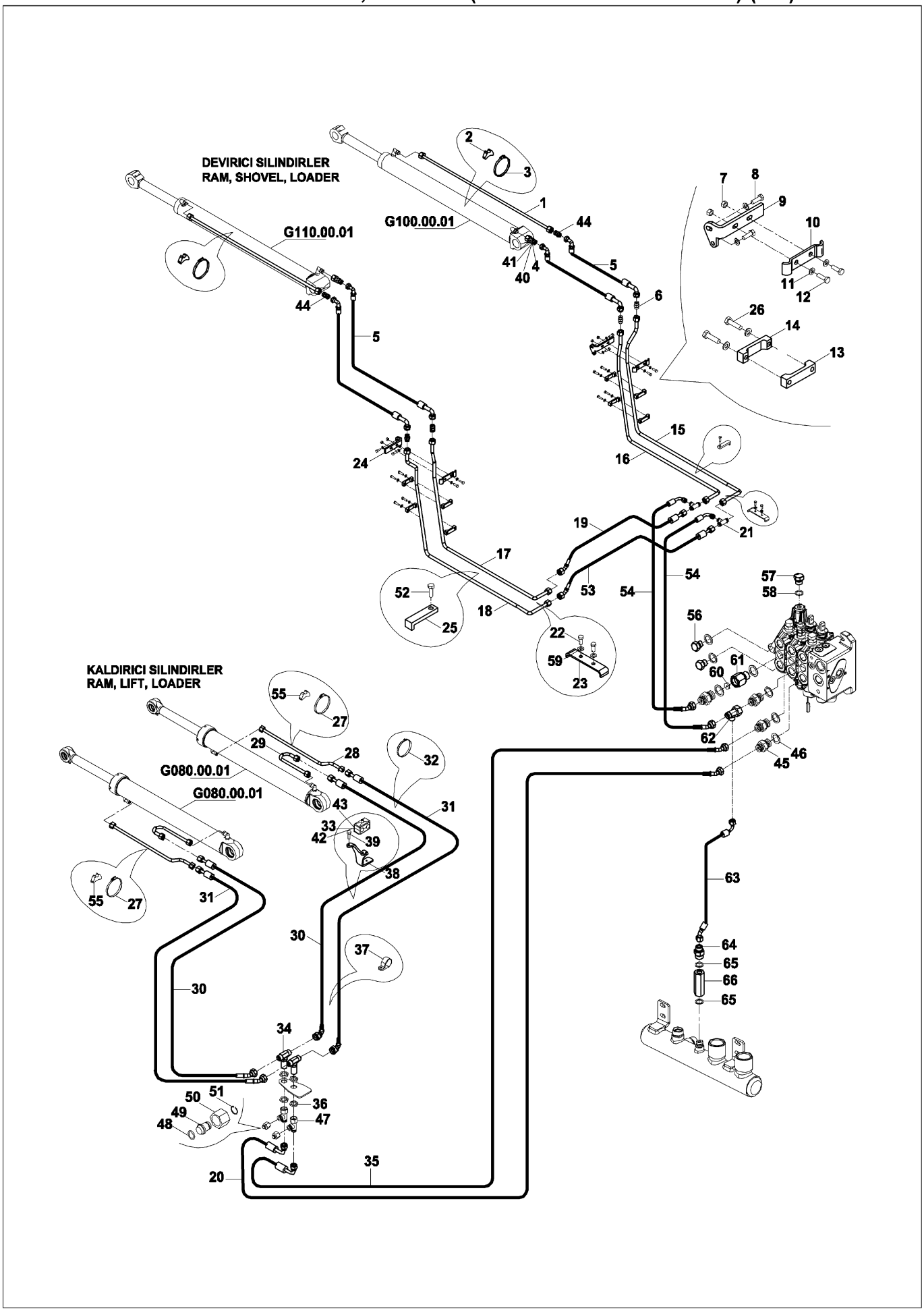

YÜKLEYİCİ HİDROLİK TESİSATI, AÇILIR KEPÇE (TİP B & PİSTONLU POMPA) (OP)
LOADER HYD. PIPING, MULTIPURPOSE BUCKET (TYPE B & PISTON PUMP) (OP)

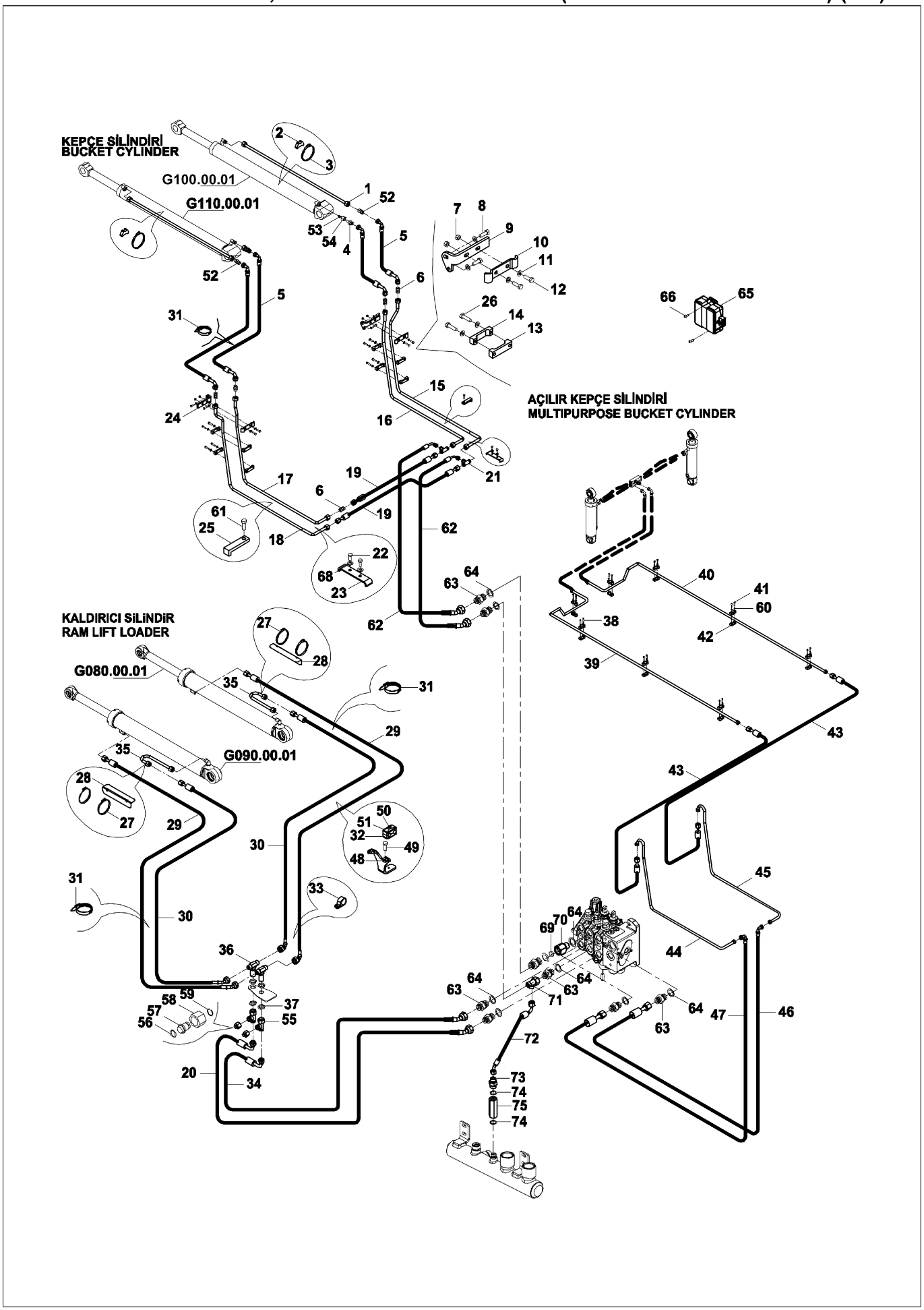

YÜKLEYİCİ HİDROLİK TESİSATI, AÇILIR KEPÇE (TİP B & PİSTONLU POMPA) (OP)
LOADER HYD. PIPING, MULTIPURPOSE BUCKET (TYPE B & PISTON PUMP) (OP)

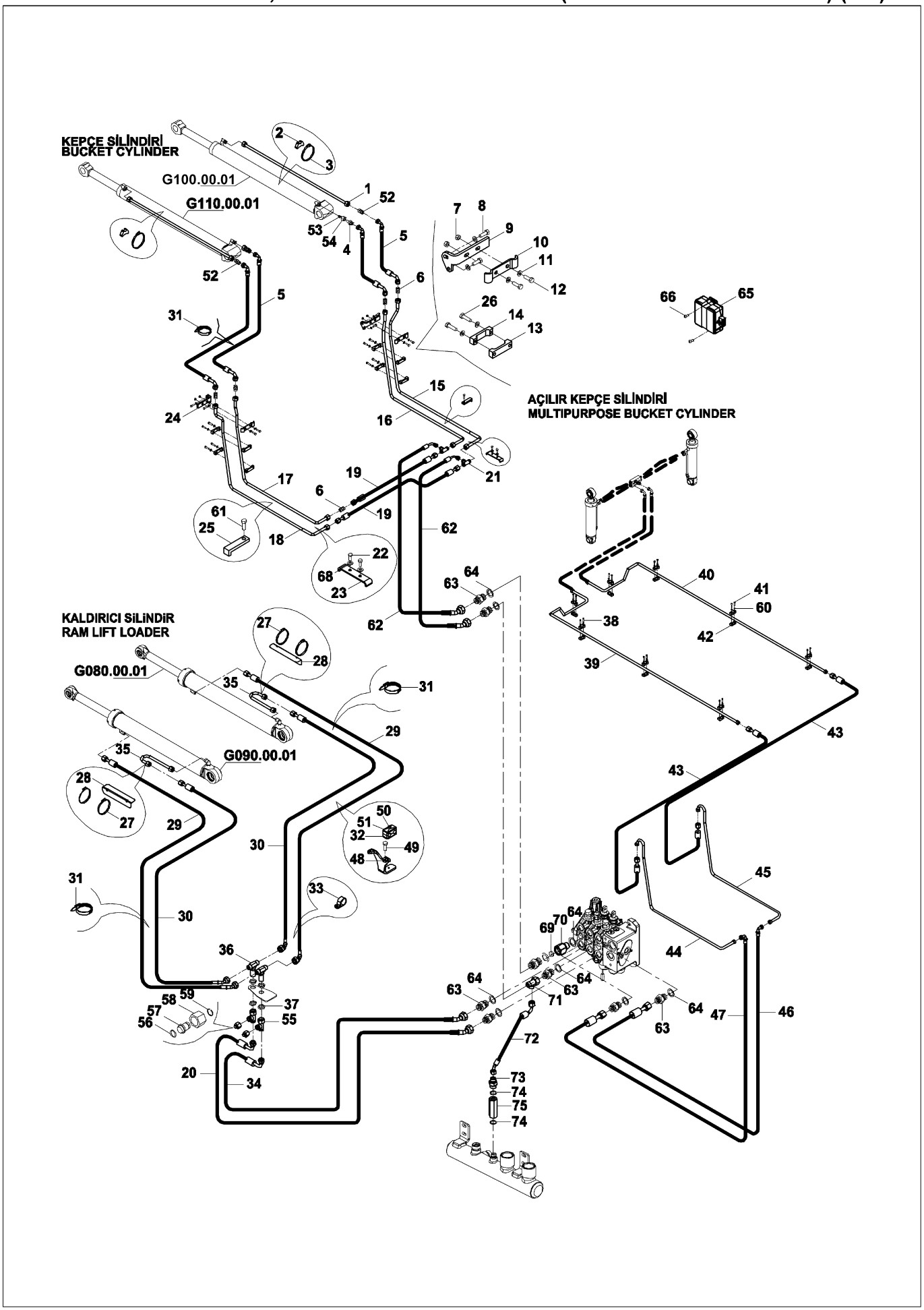

YÜKLEYİCİ HİDROLİK TESİSATI, AÇILIR KEPÇE (TİP B & PİSTONLU POMPA) (OP)
LOADER HYD. PIPING, MULTIPURPOSE BUCKET (TYPE B & PISTON PUMP) (OP)

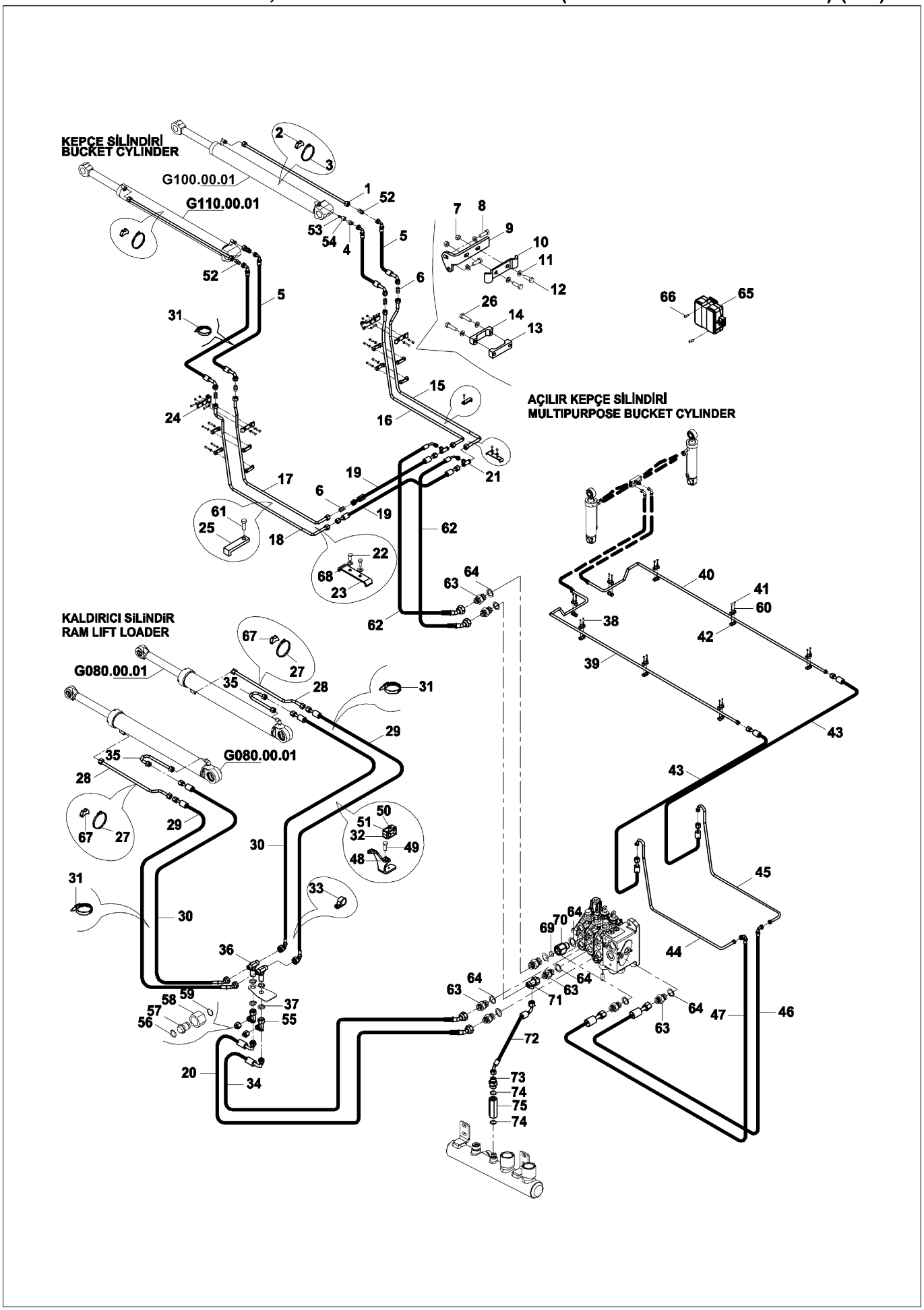

YÜKLEYİCİ HİDROLİK TESİSATI, AÇILIR KEPÇE (TİP B & PİSTONLU POMPA) (OP)
LOADER HYD. PIPING, MULTIPURPOSE BUCKET (TYPE B & PISTON PUMP) (OP)

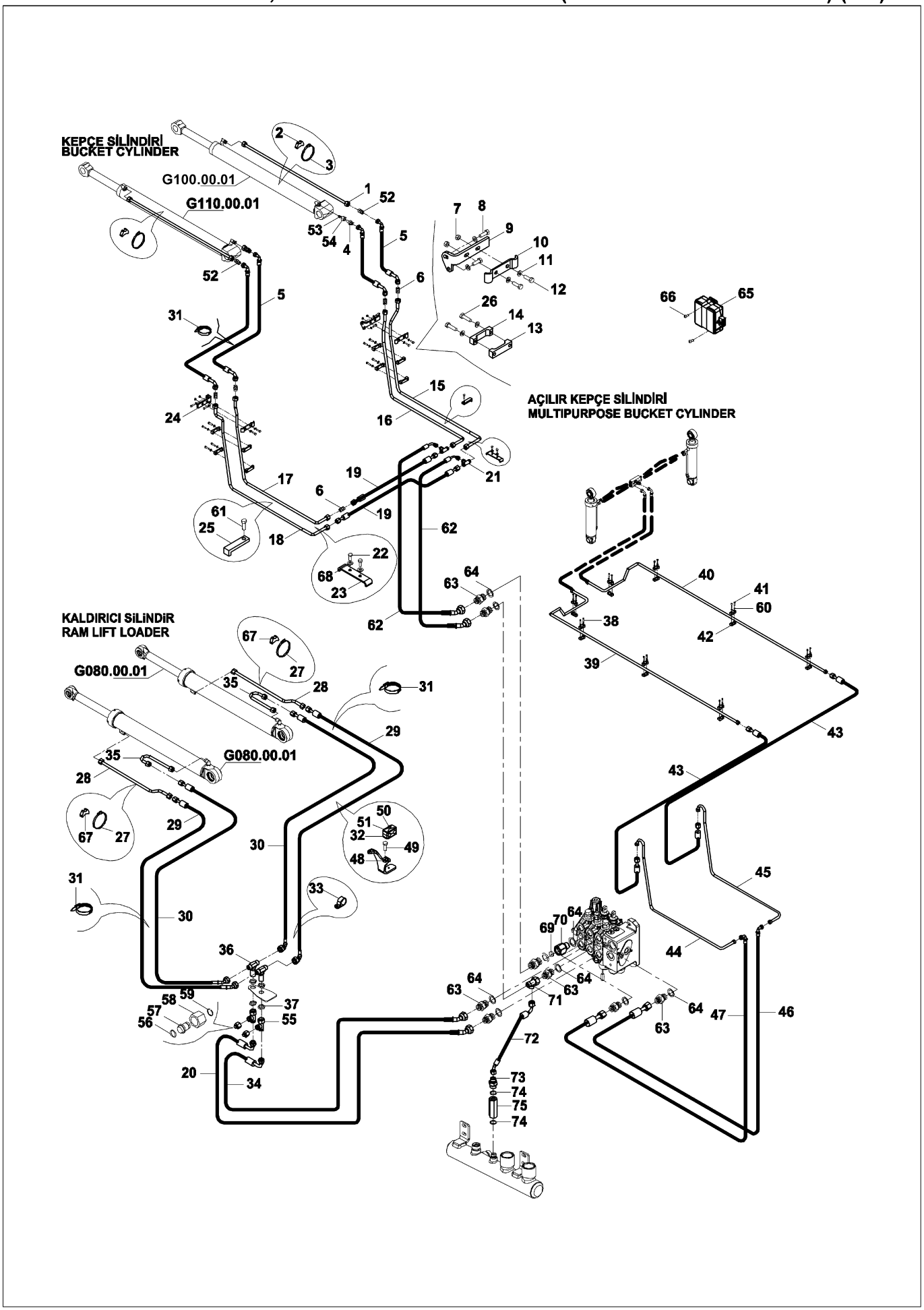

HORTUM TUTUCU SETİ (STD. ARM)
HOSE HOLDER SET (STD. ARM)

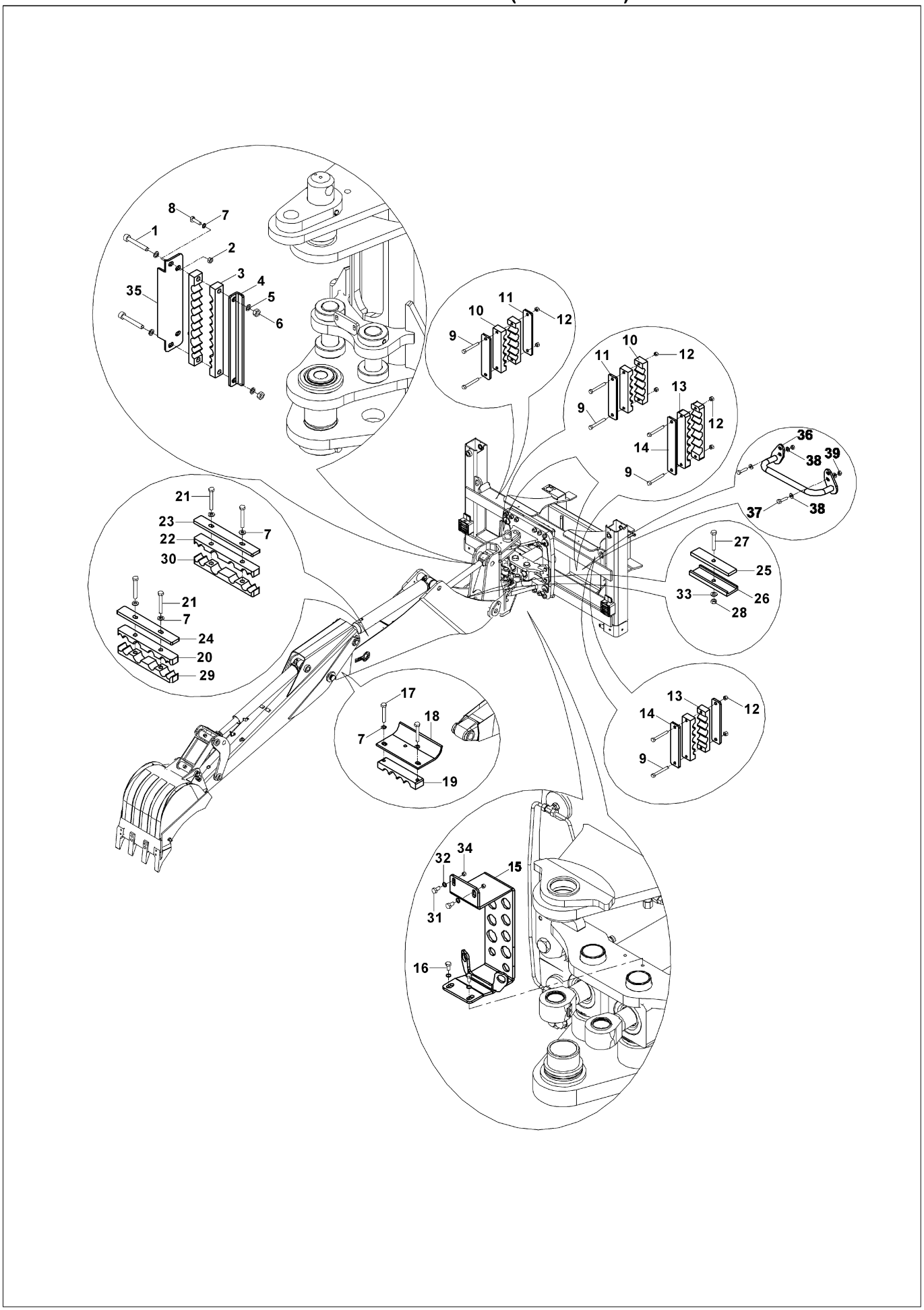

HORTUM TUTUCU SETİ (TELESKOPİK ARM
HOSE HOLDER SET (TELESCOPIC ARM)

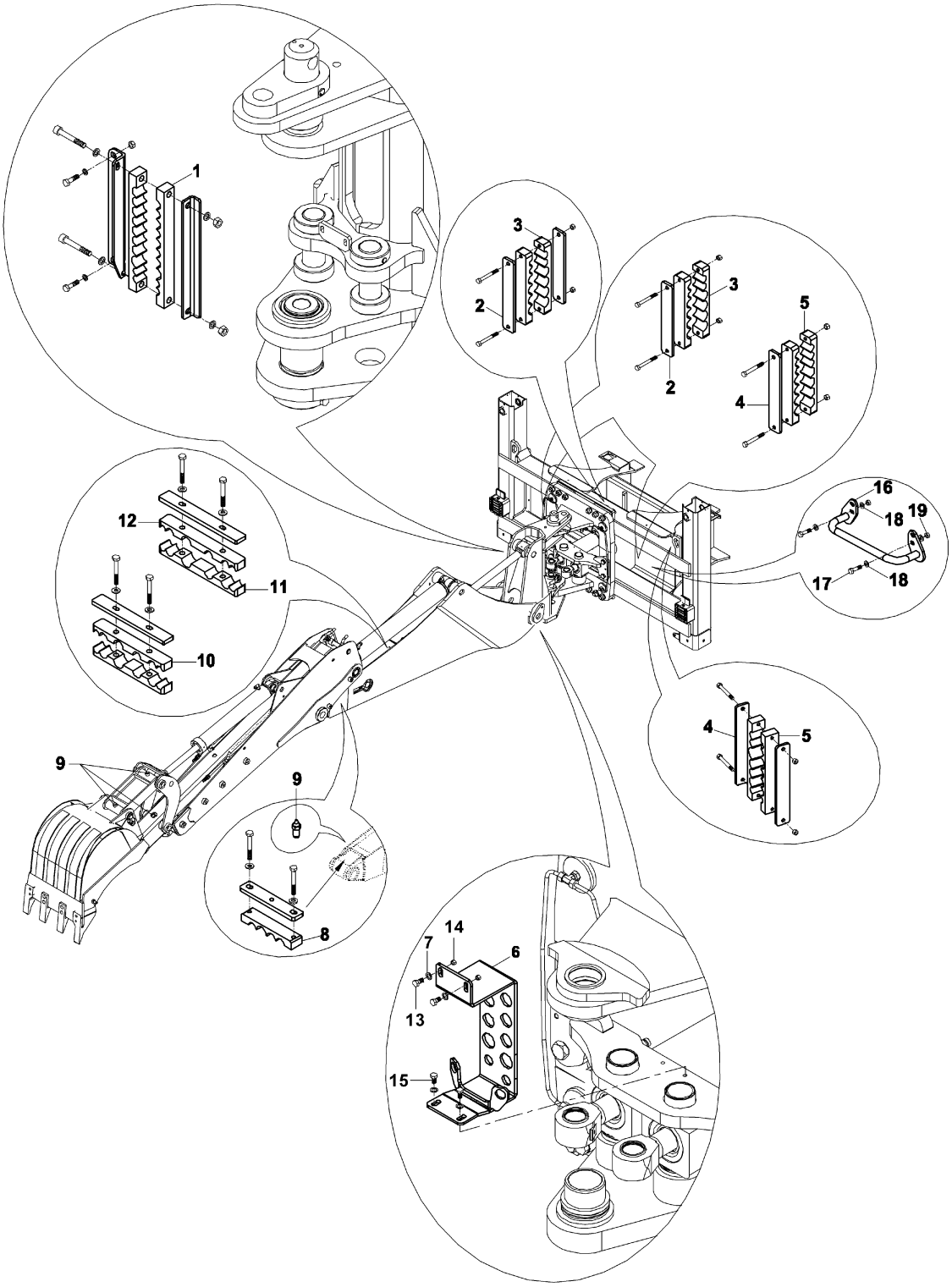

HORTUM TUTUCU SETİ (STD. ARM & MAFSALLI BOM)
HOSE HOLDER SET (STD. ARM & ARTICULATED BOOM)

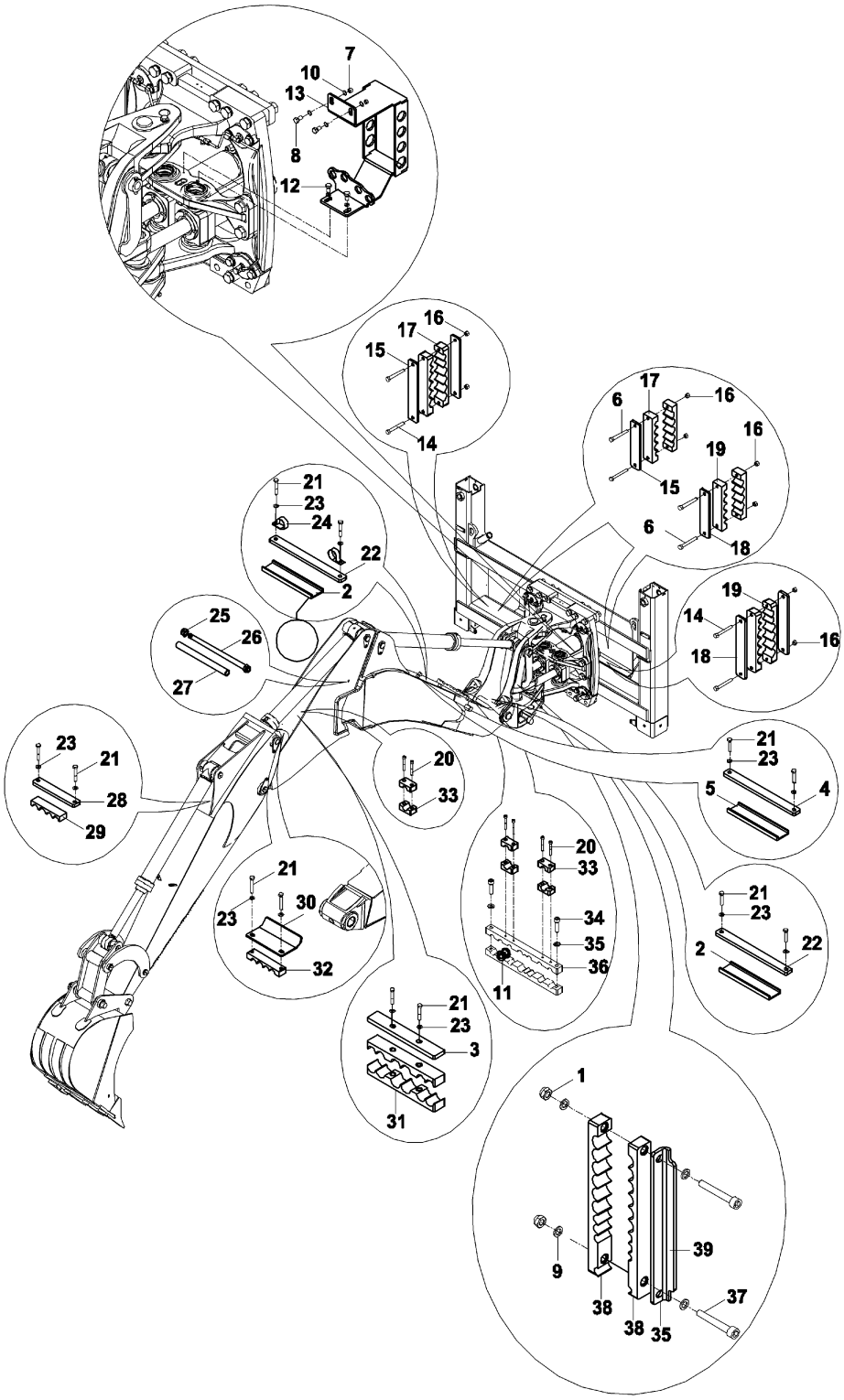

HİDROLİK TESİSAT, AYAK SİLİNDİRİ (KİLİT VALFLİ)
HYD. PIPING, STABILIZER CYLINDER (WITH SAFETY LOCKING VALVE)

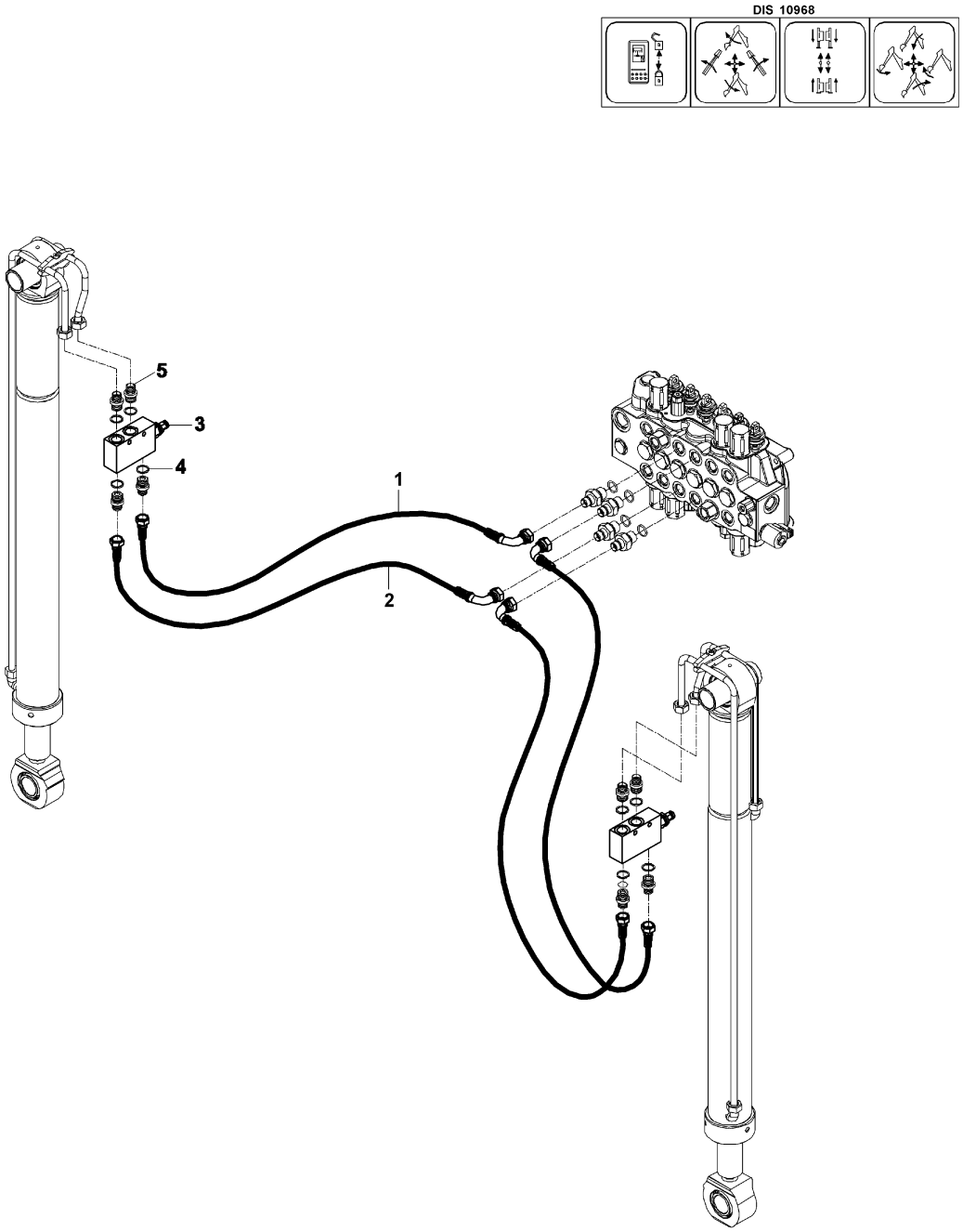

HİDROLİK TESİSAT, AYAK SİLİNDİRİ (TİP B)
HYDRAULIC PIPING, STABILIZER CYLINDER (TYPE B)

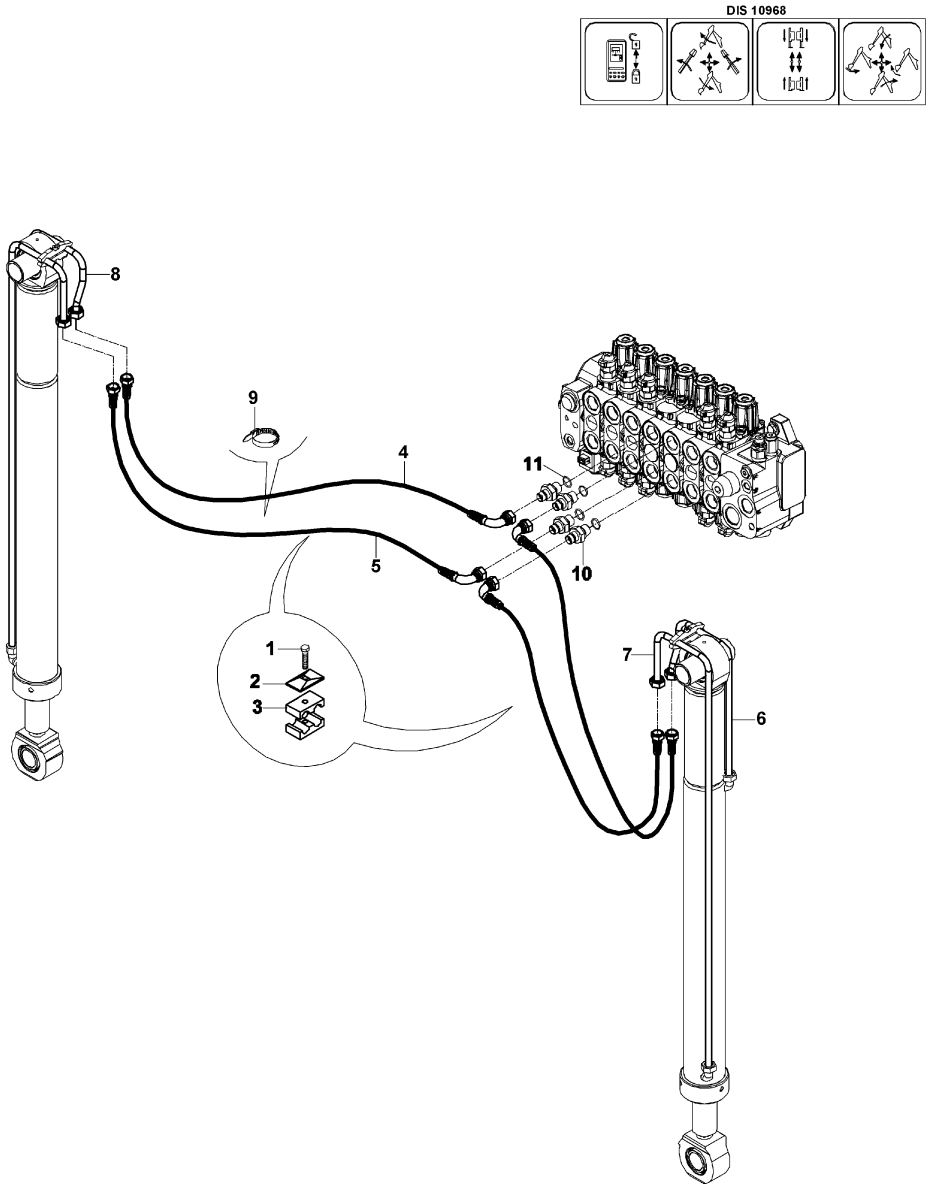

HİDROLİK TESİSATI, SIKMA PİSTONU
HYDRAULIC PIPING, HYDROCLAMP

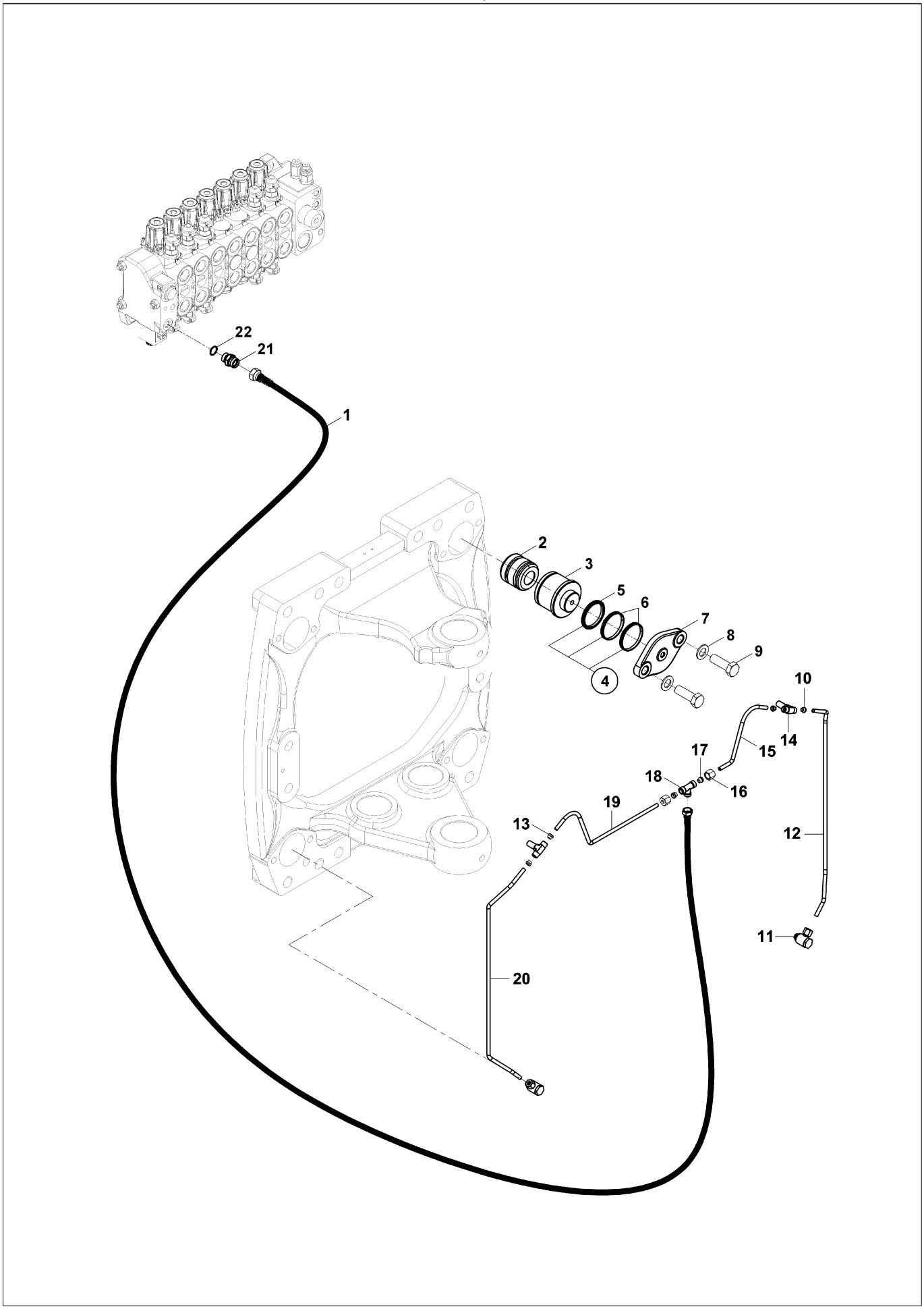

HİDROLİK TESİSAT, DÖNÜŞ SİLİNDİRİ (TİP B)
HYDRAULIC PIPING, SWING CYLINDER (TYPE B)

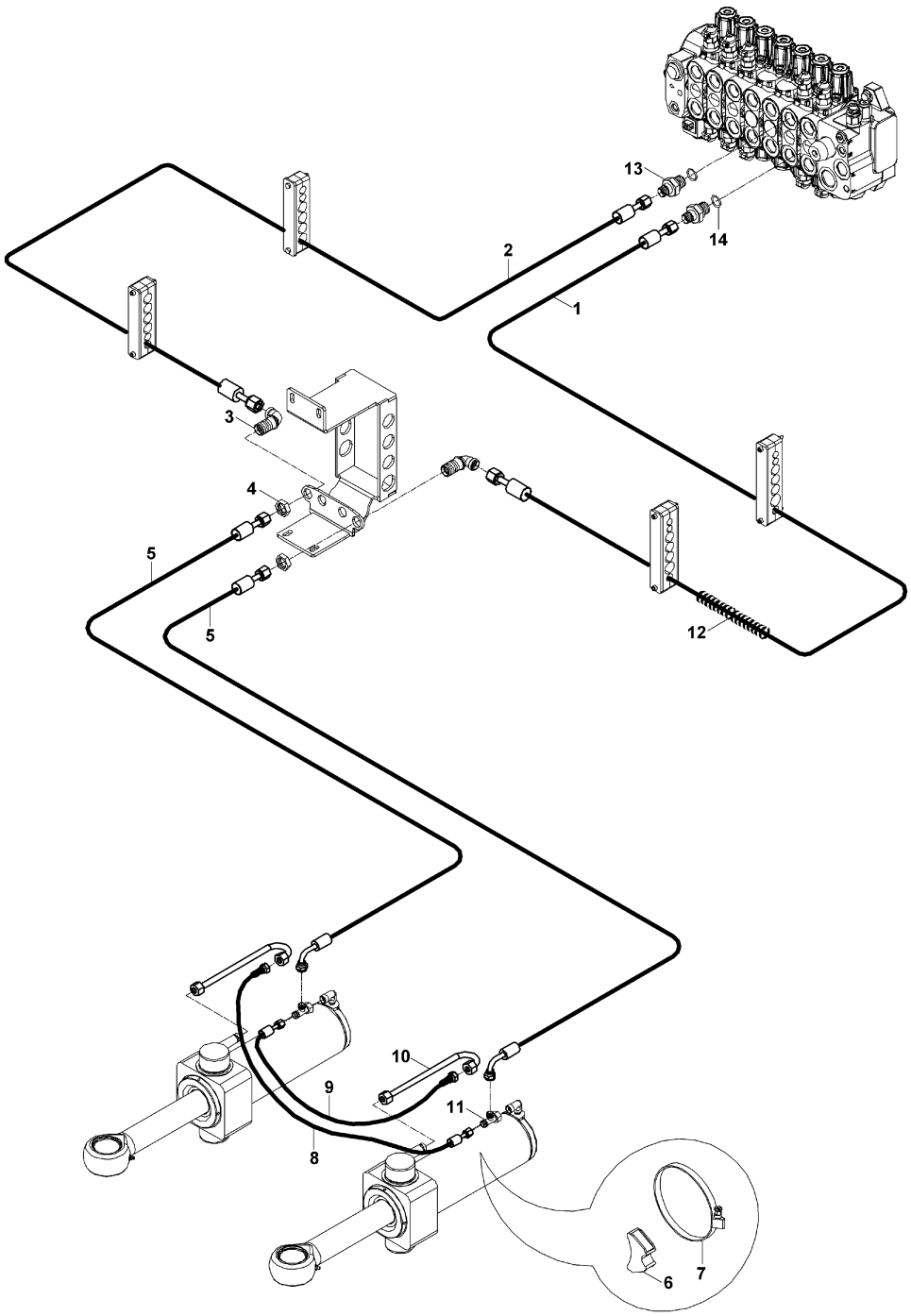

KAZICI HİDROLİK TESİSATI, BOM SİLİNDİRİ (EMNİYET VALFLİ)
BACKHOE HYD. PIPING, BOOM CYLINDER (WITH SAFETY LOCK VALVE)

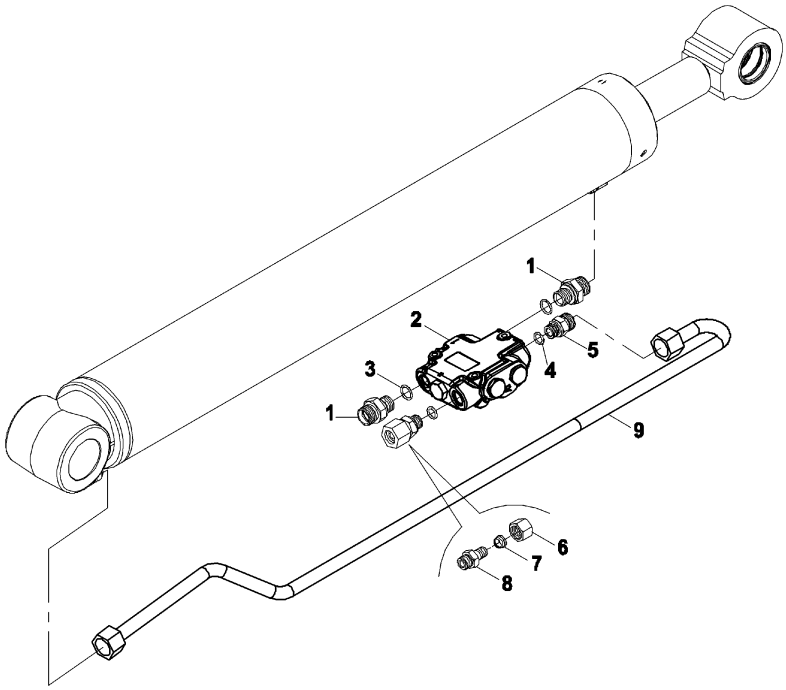

KAZICI HİDROLİK TESİSATI, BOM SİLİNDİRİ (MAFSALLI BOM, MUZ BOM)
BACKHOE HYD. PIPING, BOOM CYLINDER (ARTICULATED BOOM)

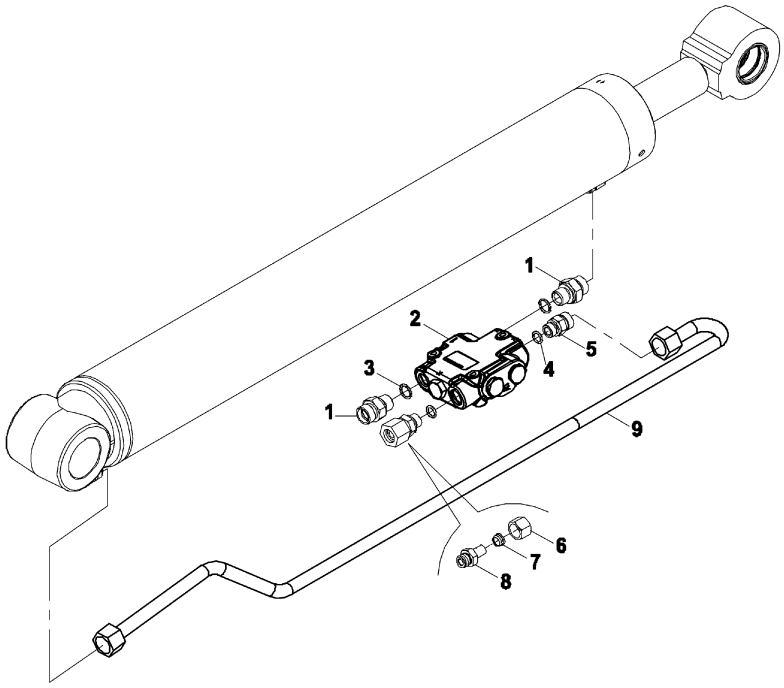

KAZICI HİDROLİK TESİSATI, BOM SİLİNDİRİ (MAFSALLI BOM)
BACKHOE HYD. PIPING, BOOM CYLINDER (ARTICULATED BOOM)

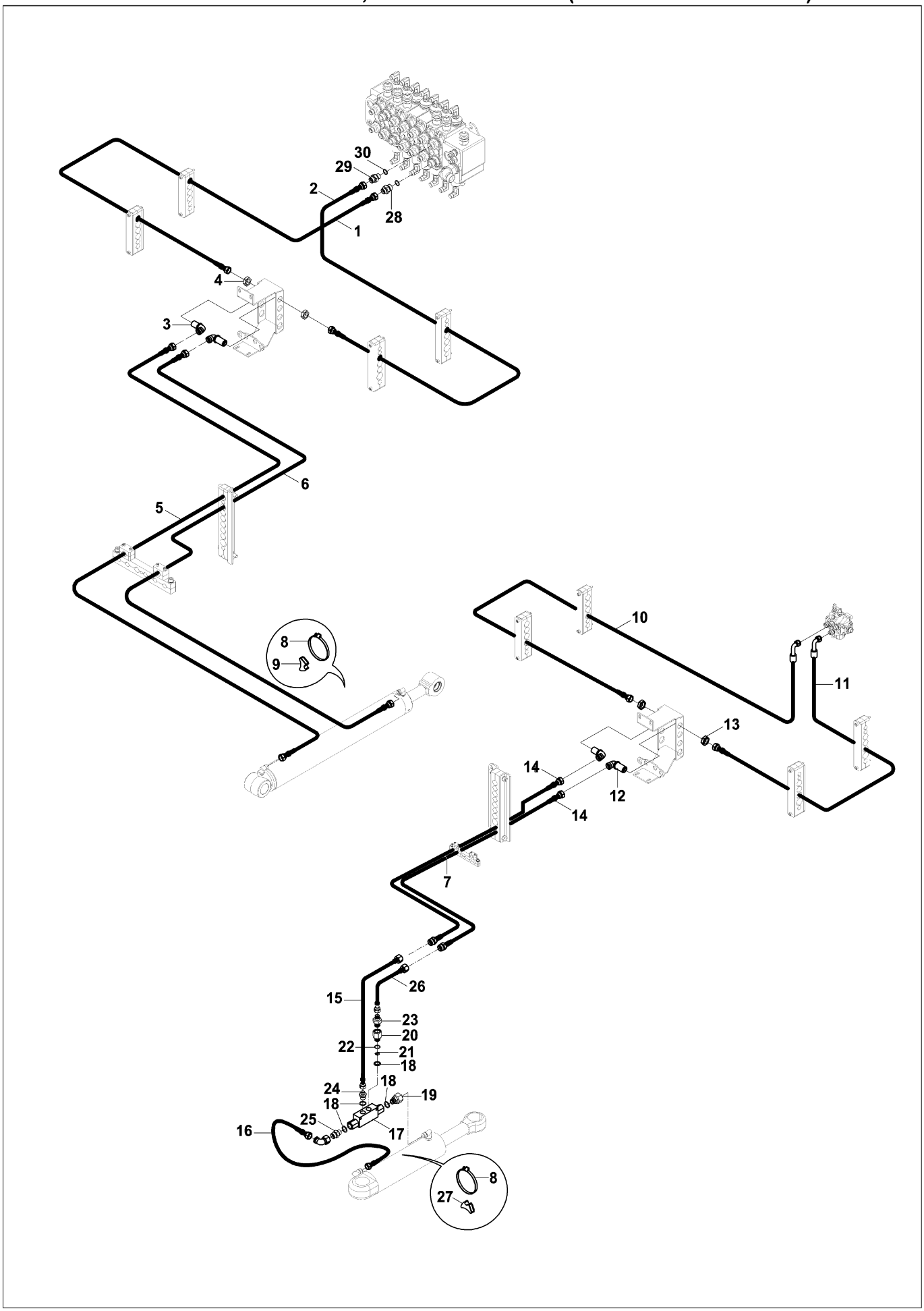

KAZICI HİDROLİK TESİSATI, BOM SİLİNDİRİ (TİP B)
BACKHOE HYDRAULIC PIPING, BOOM CYLINDER (TYPE B)

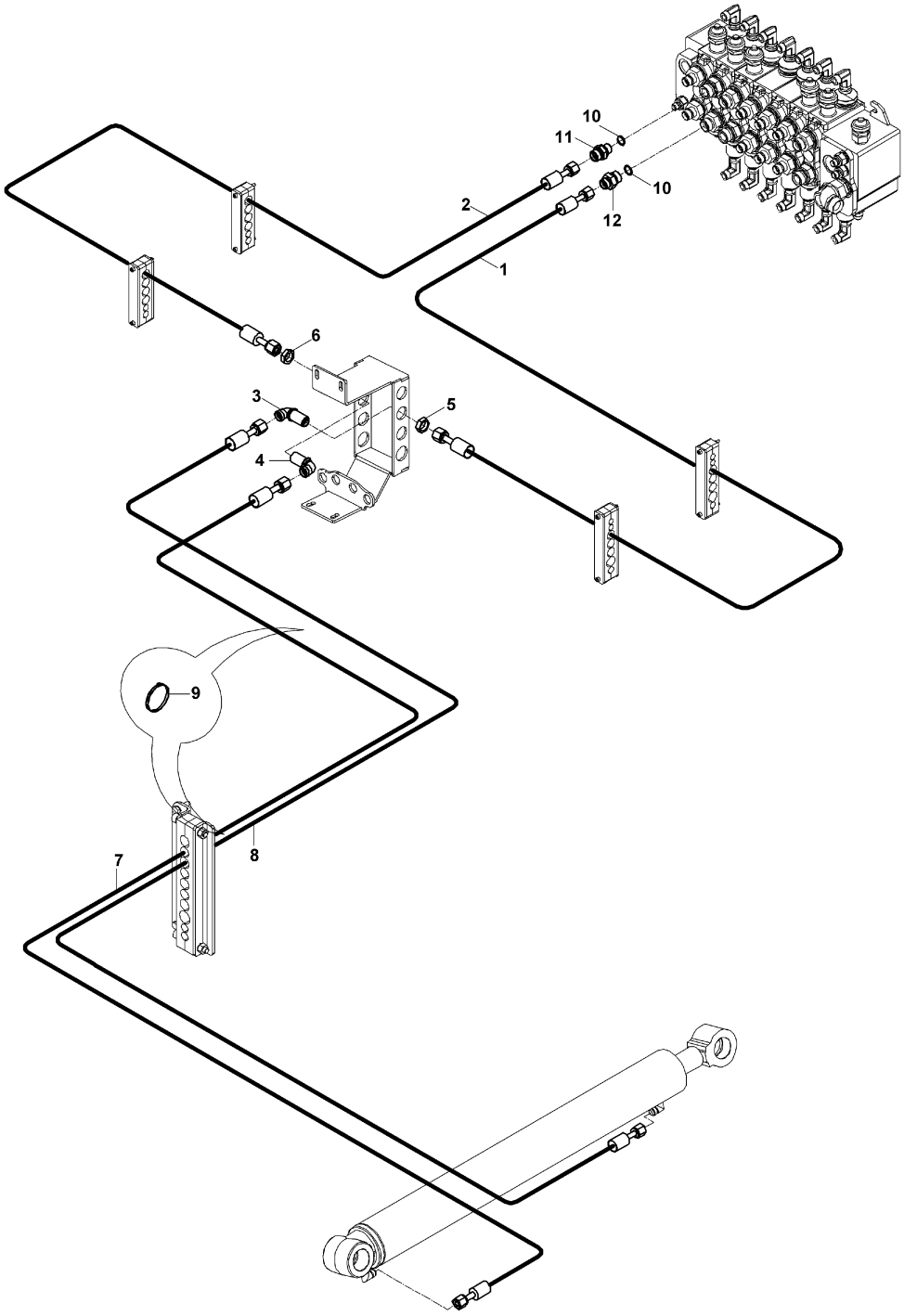

KAZICI HİDROLİK TESİSATI, ARM SİLİNDİRİ
BACKHOE HYDRAULIC PIPING, ARM CYLINDER

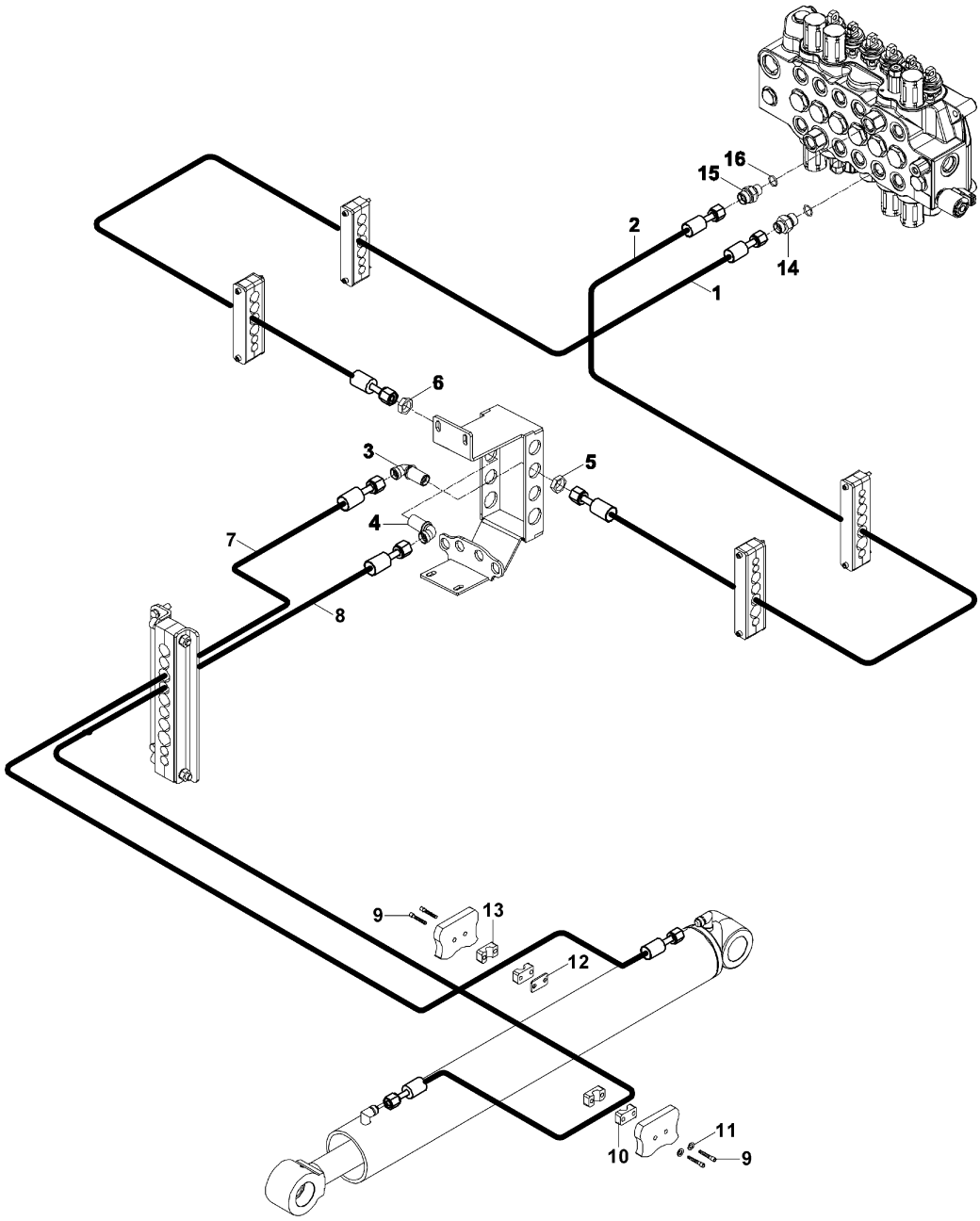

KAZICI HİDROLİK TESİSATI, ARM SİLİNDİRİ (EMNİYET VALFLİ)
BACKHOE HYD. PIPING, ARM CYLINDER (WITH SAFETY LOCK VALVE)

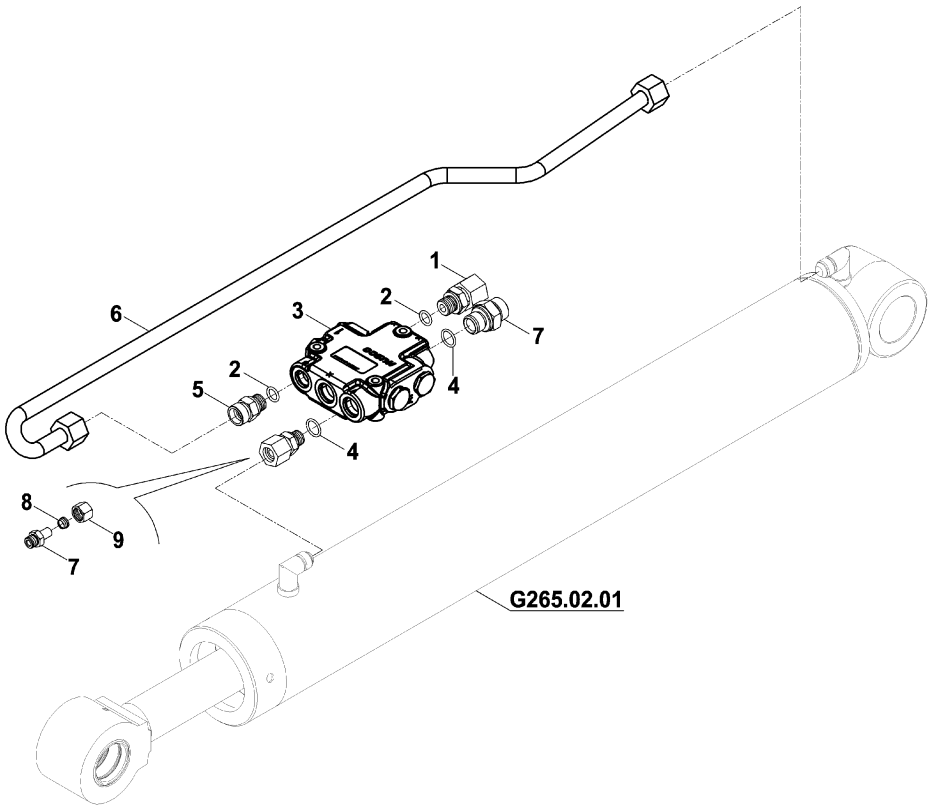

KAZICI HİDROLİK TESİSATI, ARM SİLİNDİRİ (MAFSALLI BOM)
BACKHOE HYDRAULIC PIPING, ARM CYLINDER (ARTICULATED BOOM)

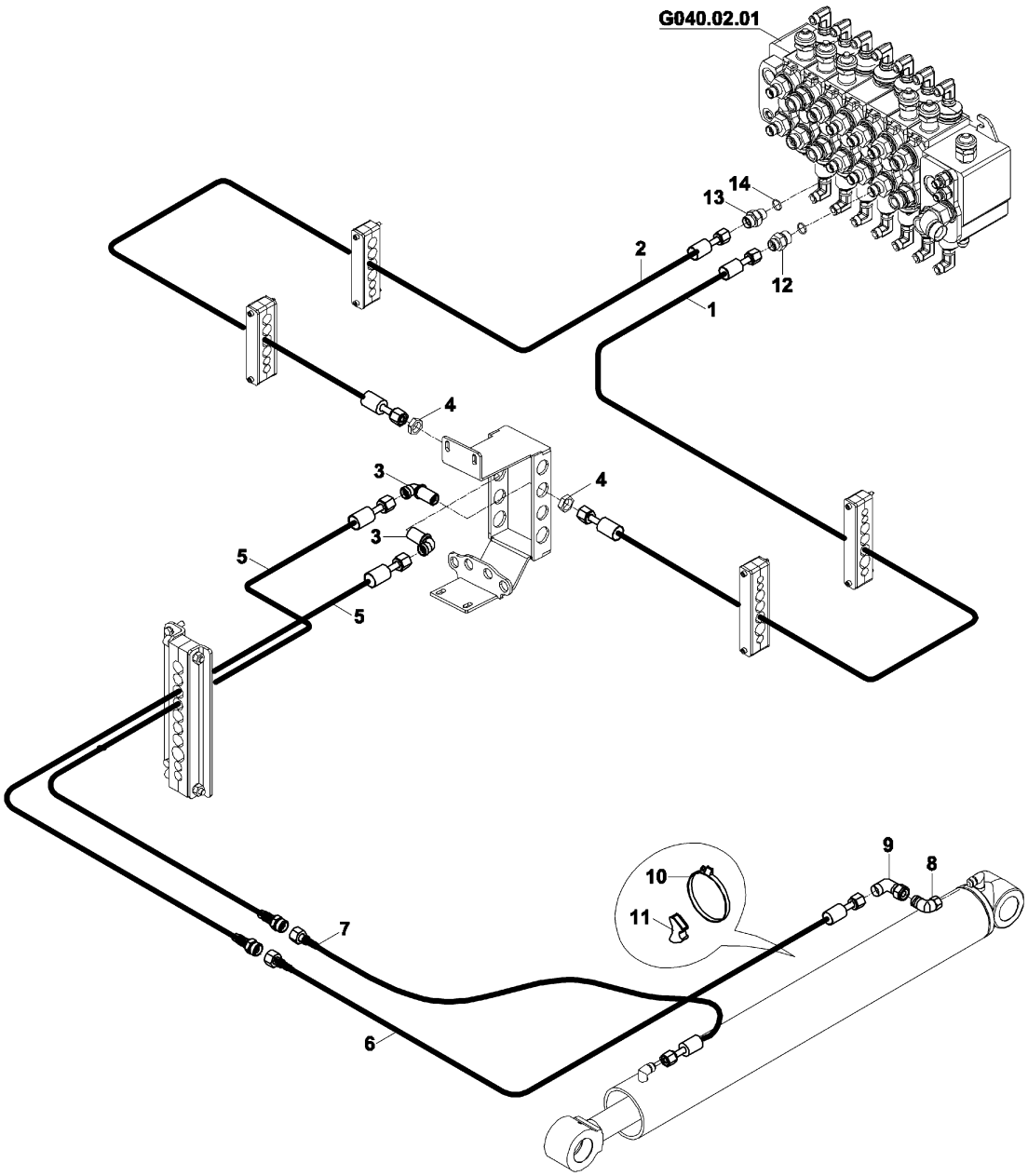

KAZICI HİDROLİK TESİSATI, ARM SİLİNDİRİ (EMNİYET VALFLİ, MAFSALLI BOM)
BACKHOE HYDRAULIC PIPING, ARM CYLINDER (SAFETY VALVE, ARTICULATED

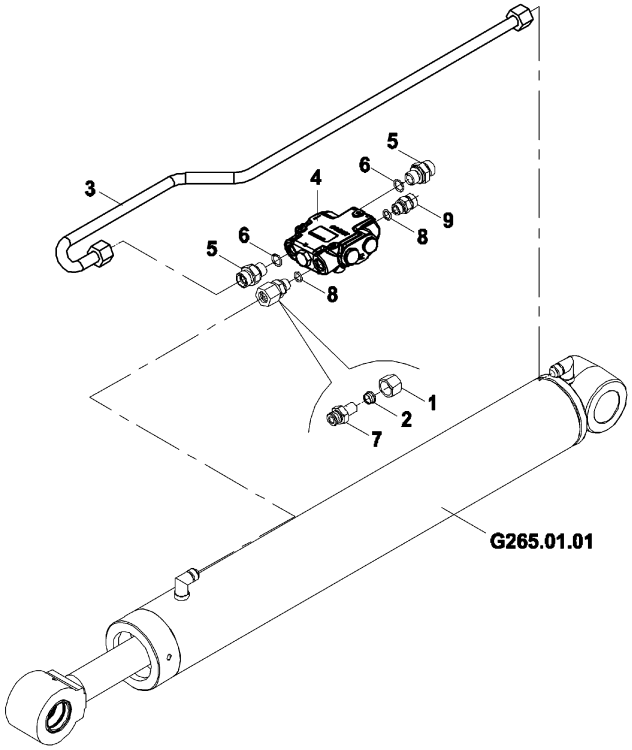

KAZICI HİDROLİK TESİSATI, KEPÇE SİLİNDİRİ (TELESKOPİK BOM & REXROTH)
BACKHOE HYDRAULIC PIPING, BUCKET CYLINDER (TELESCOPIC BOOM &

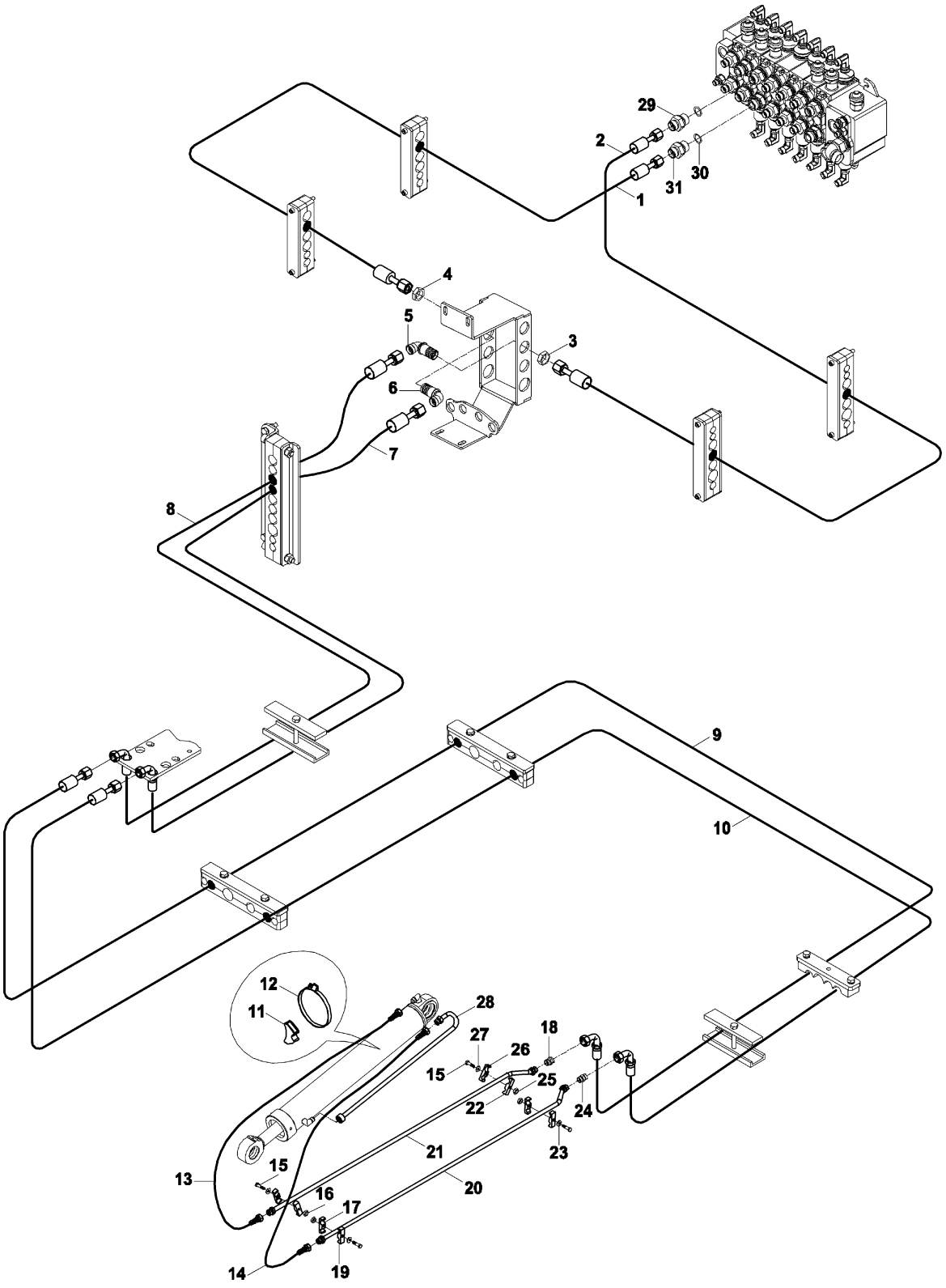

KAZICI HİDROLİK TESİSATI, KEPÇE SİLİNDİRİ (TELESKOPİK BOM) (TİP B)

KAZICI HİDROLİK TESİSATI, KEPÇE SİLİNDİRİ (TELESKOPİK BOM) (TİP B)

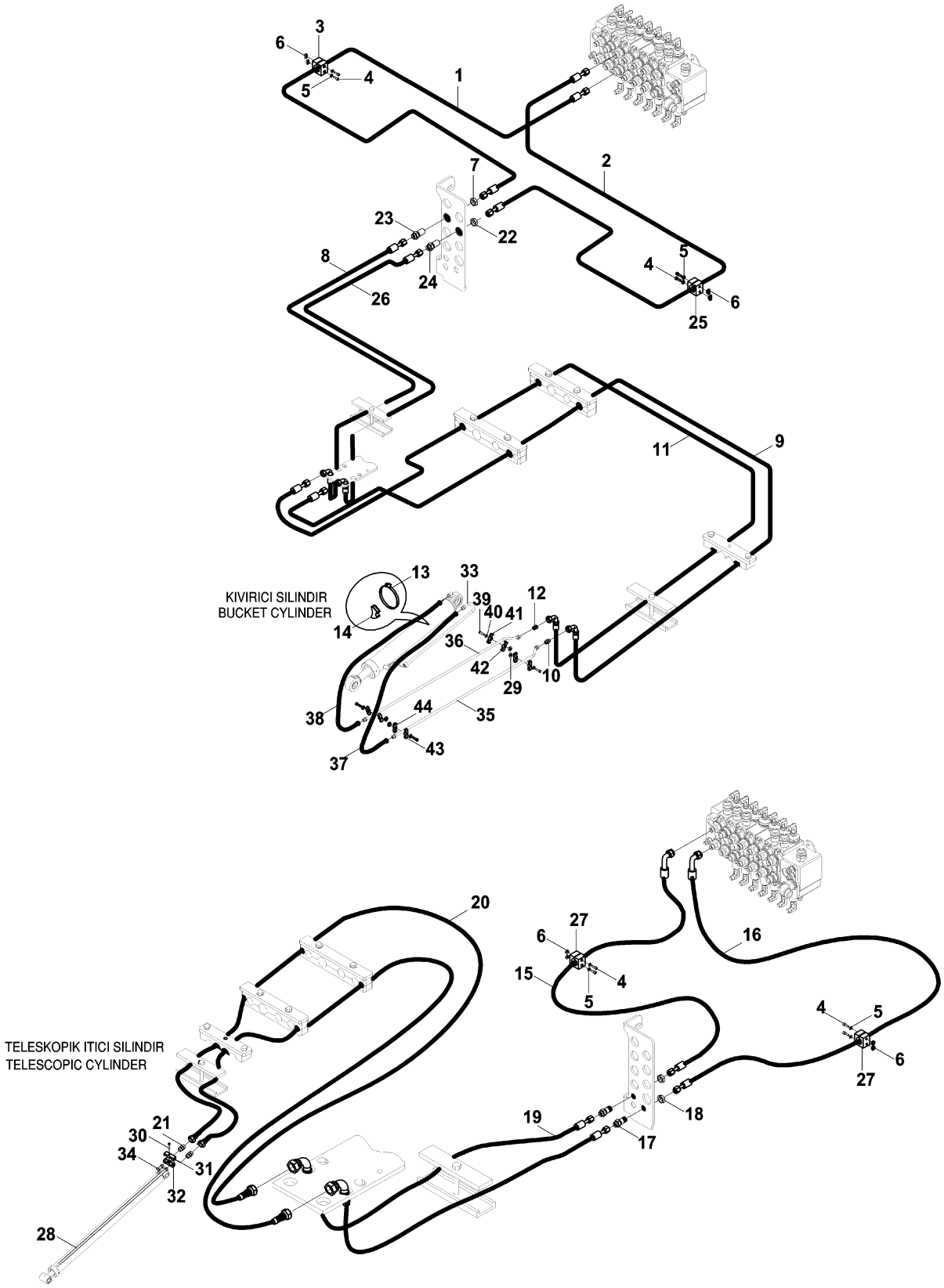

KAZICI HİDROLİK TESİSATI, KEPÇE SİLİNDİRİ (MAFSALLI BOM &TİP B)
BACKHOE HYDRAULIC PIPING, BUCKET CYLINDER (ARTICULATED BOOM & TİP B)

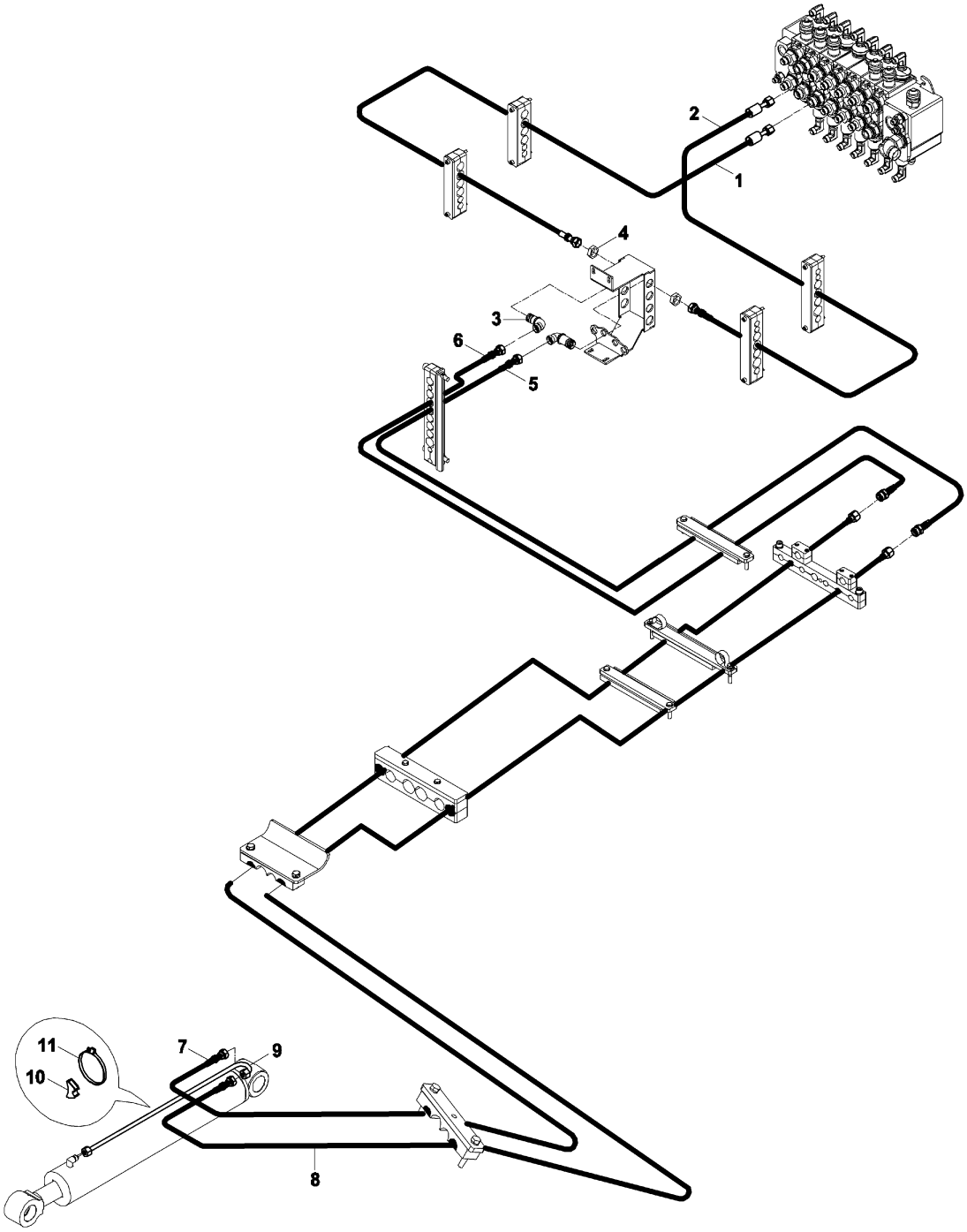

KAZICI HİDROLİK TESİSATI, KEPÇE SİLİNDİRİ (TİP B)
BACKHOE HYDRAULIC PIPING, BUCKET CYLINDER (TYPE B)

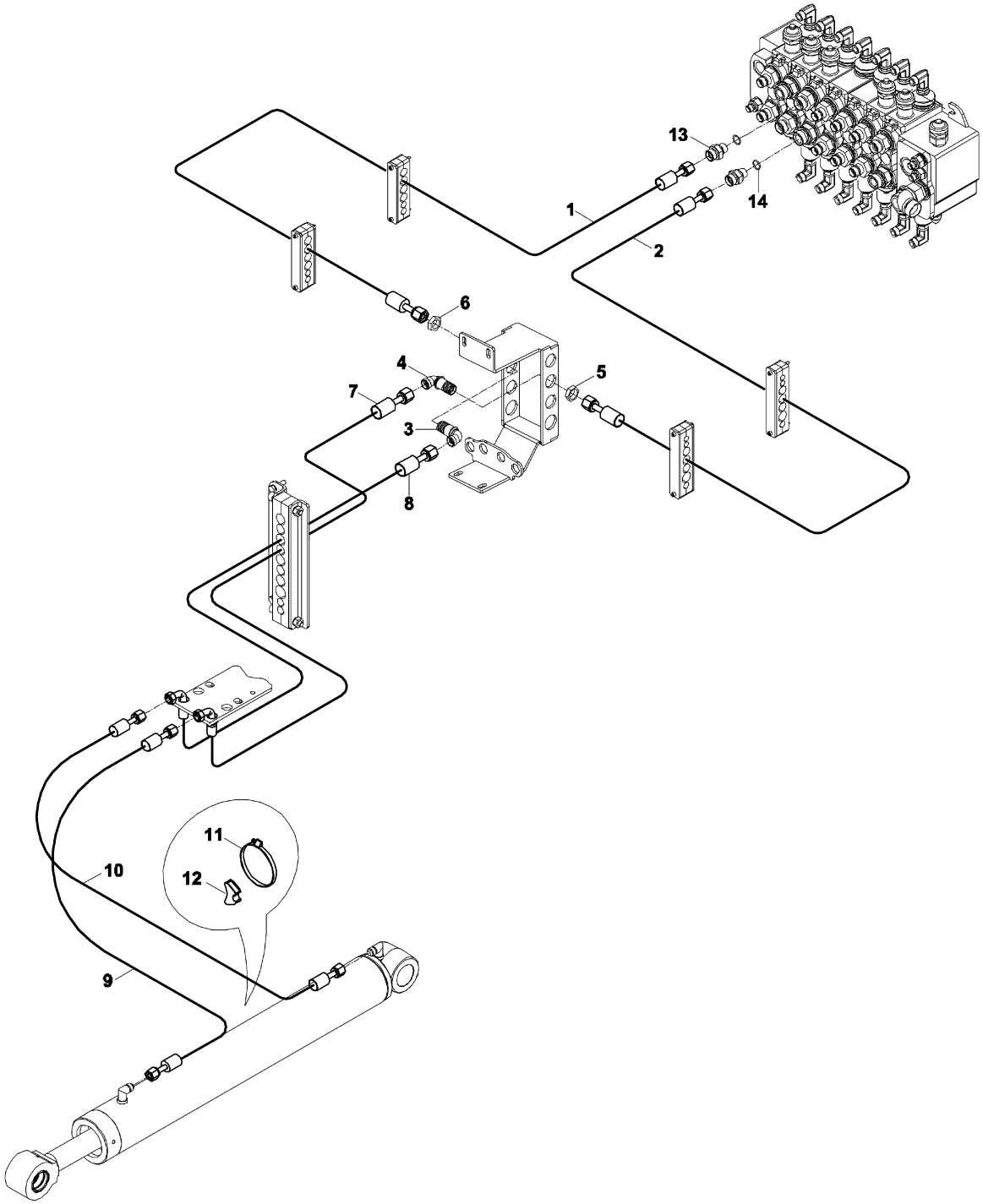

KIRICI HİDROLİK TESİSATI (STD. ARM & TİP B)
BREAKER HYDRAULIC PIPING (STD. ARM & TYPE B)

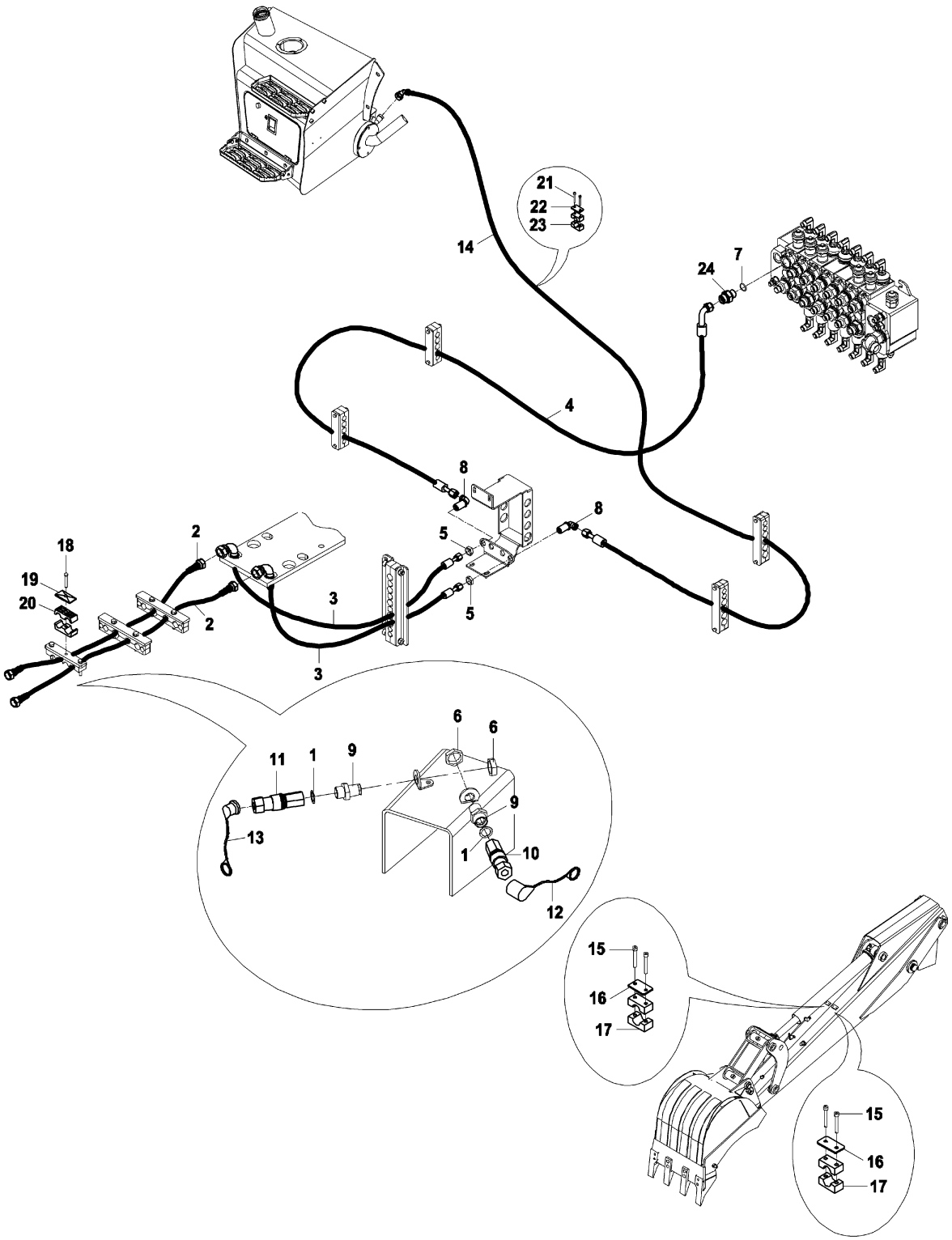

TEK ETKİLİ HİDROLİK TESİSATI (KIRICI & STD. ARM & LEVYE & JOYİSTİK) (TİP B)
SINGLE ACTING HYD. PIPING (BREAKER & STD.ARM & LEVERS & JOYSTICK) (TYPE

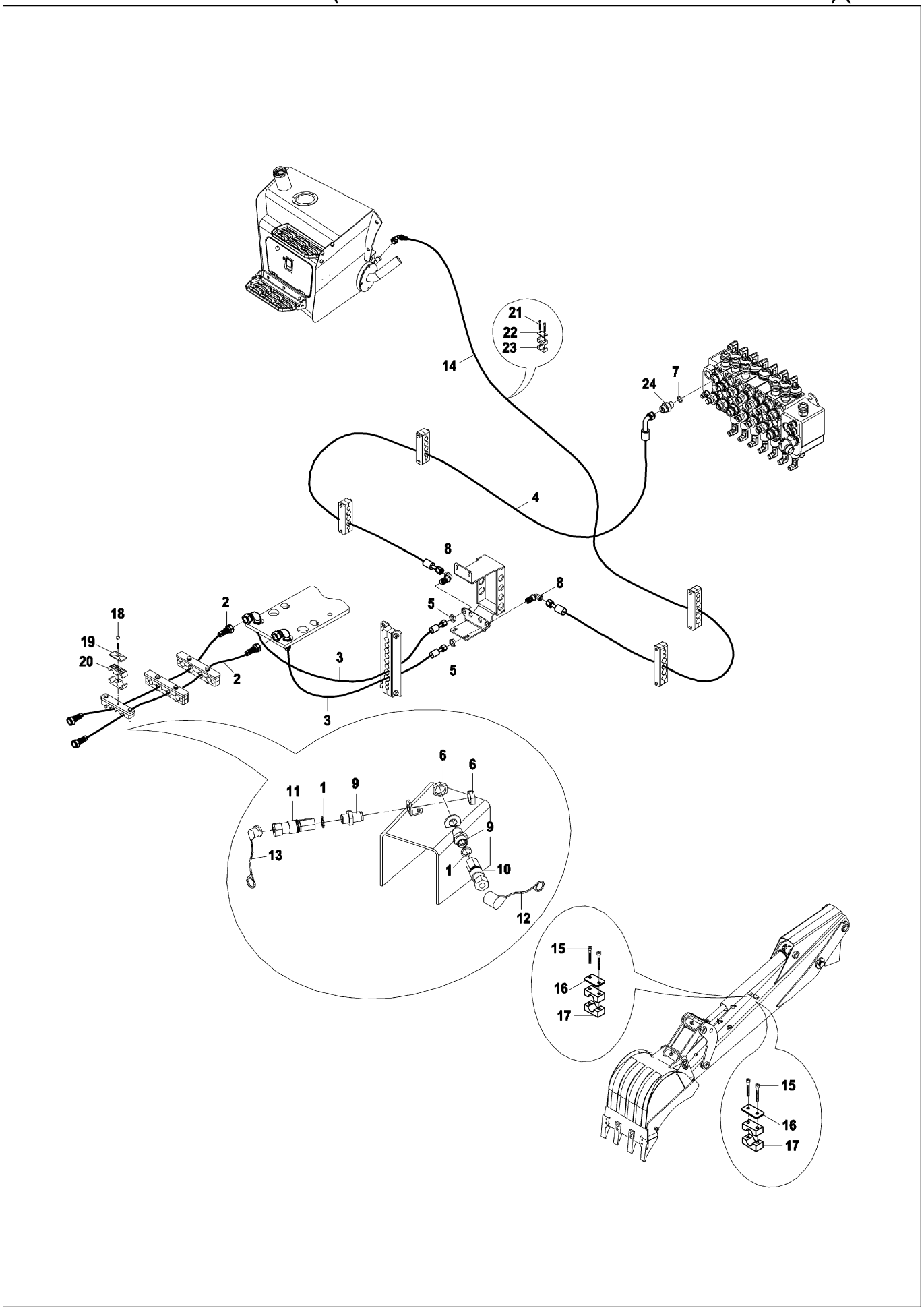

TEK ETKİLİ HİDROLİK TESİSATI (KIRICI & STD. ARM & JOYİSTİK & MAFSALLI BOM) (TİP

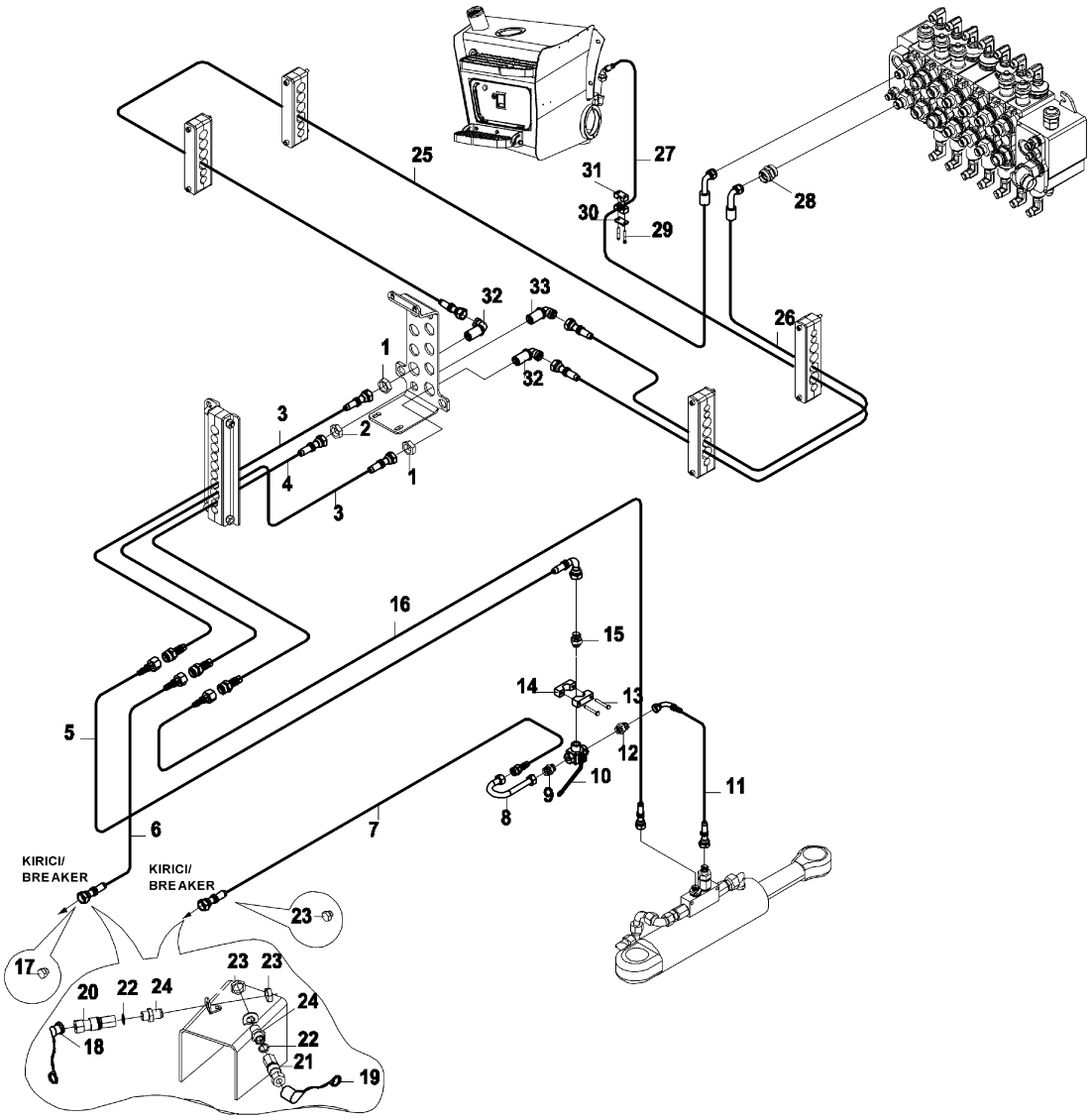

KIRICI HİDROLİK TESİSATI (TELESKOPİK & TİP B)
BREAKER HYDRAULIC PIPING (TELESCOPIC BOOM & TYPE B)

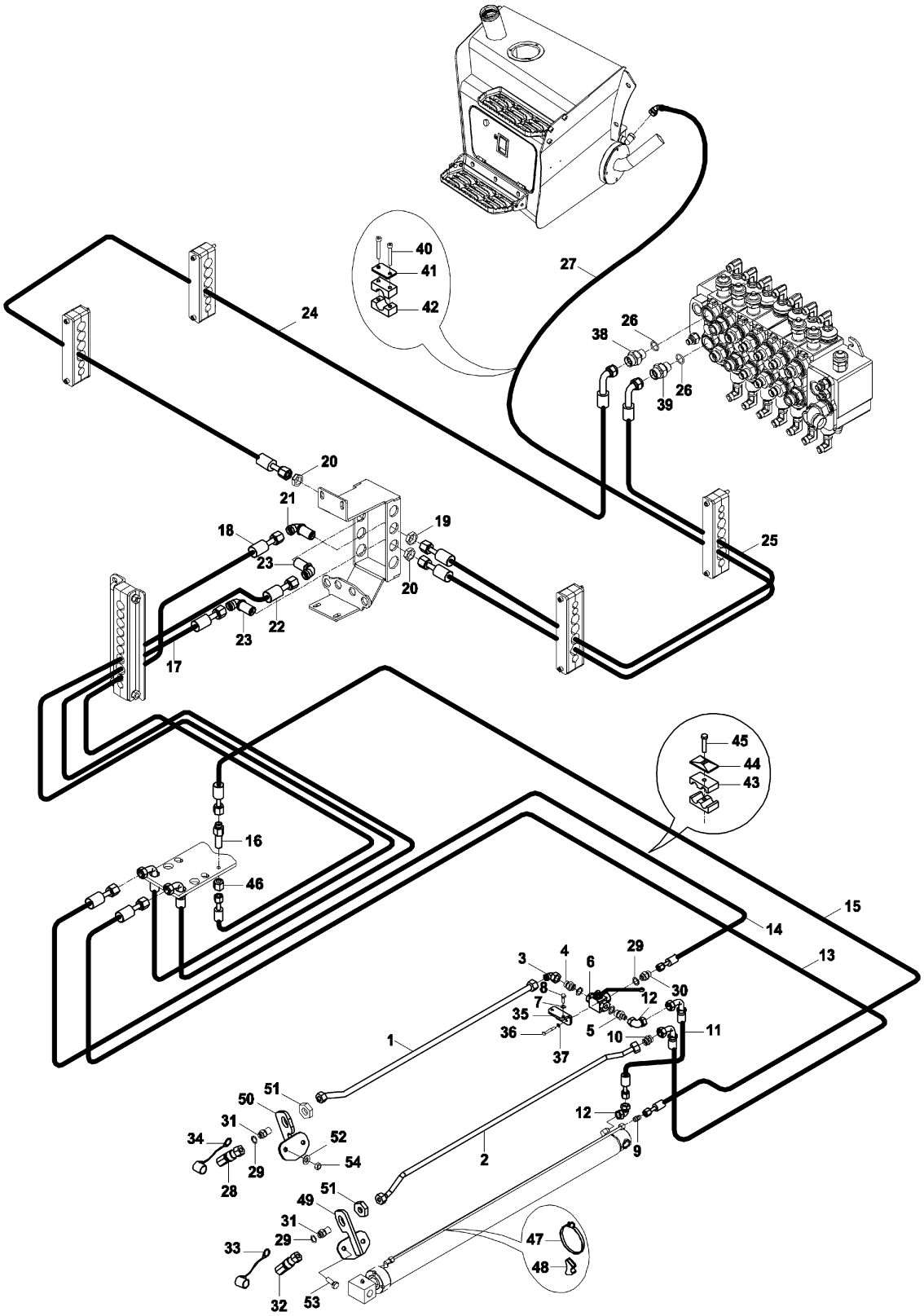

KIRICI HİDROLİK TESİSATI (TELESKOPİK & TİP B)
BREAKER HYDRAULIC PIPING (TELESCOPIC BOOM & TYPE B)

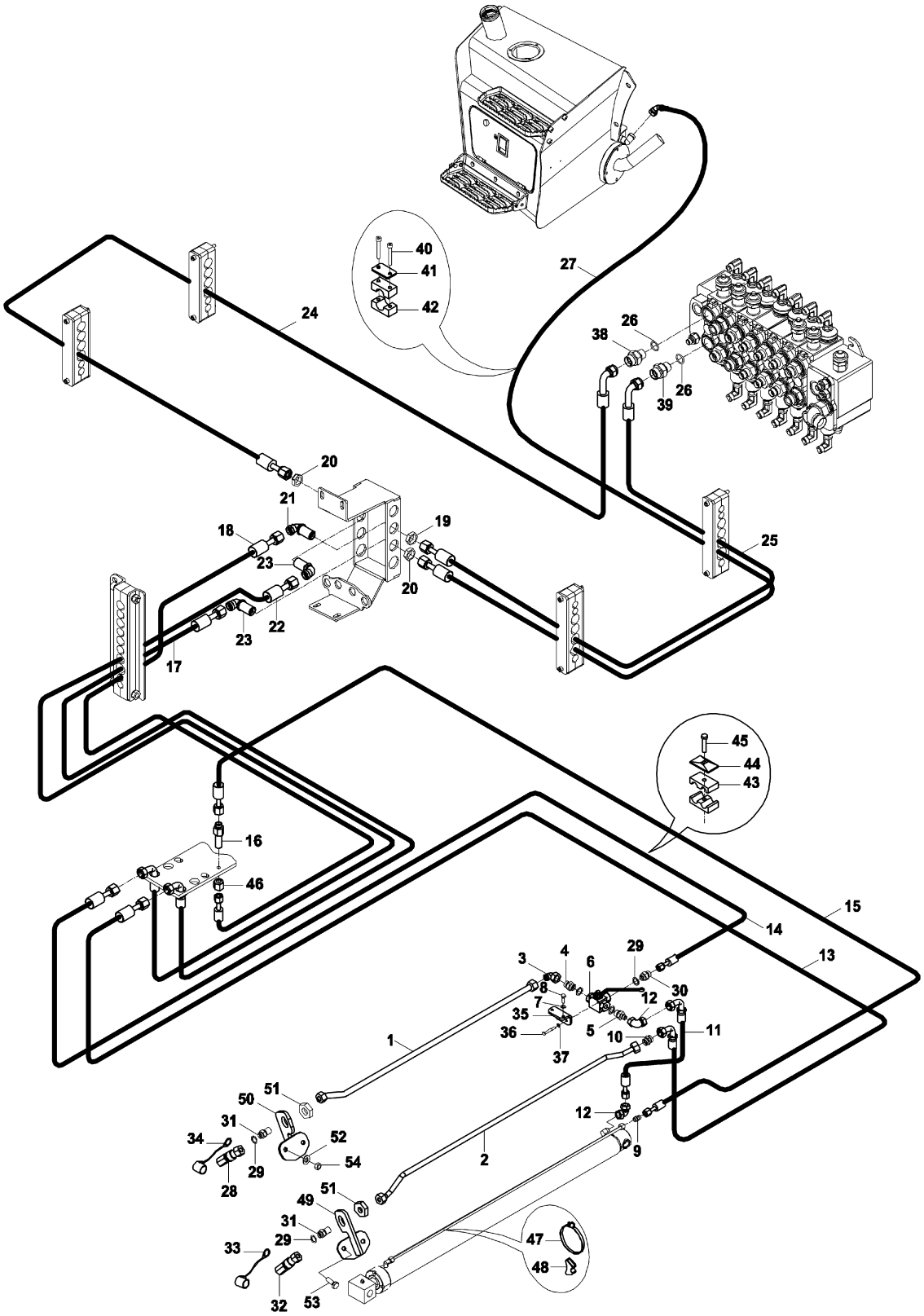

İLAVE HAT HİDROLİK TESİSATI, BURGU/DÖNER KEPÇE (TELESKOPİK&TİP B)
ADDITIONAL LINE HYDRAULIC PIPING,AUGER/TILTING BUCKET(TELESCOPIC &

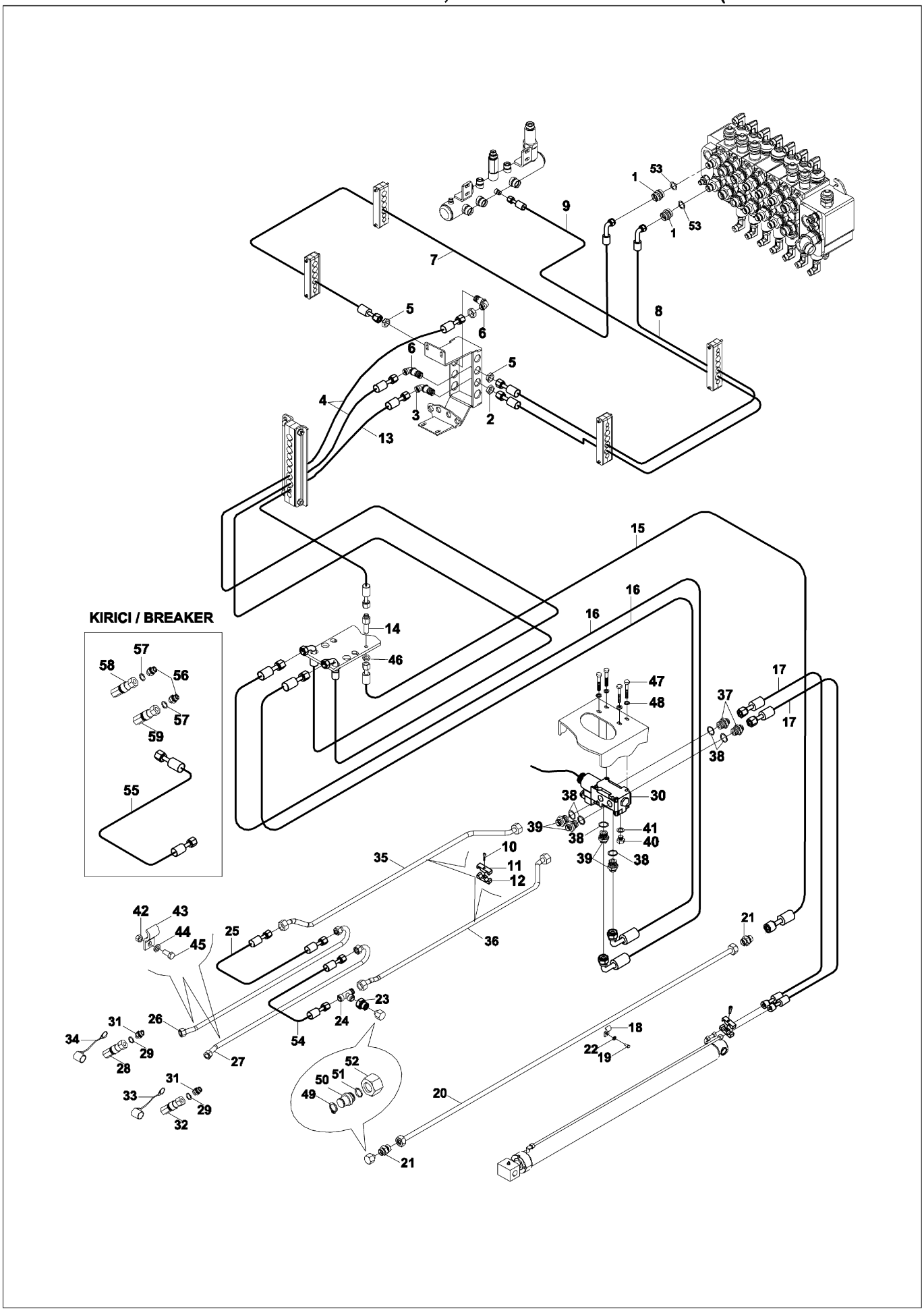

İLAVE HAT HİDROLİK TESİSATI, BURGU/DÖNER KEPÇE (TELESKOPİK&TİP B)
ADDITIONAL LINE HYDRAULIC PIPING,AUGER/TILTING BUCKET(TELESCOPIC &

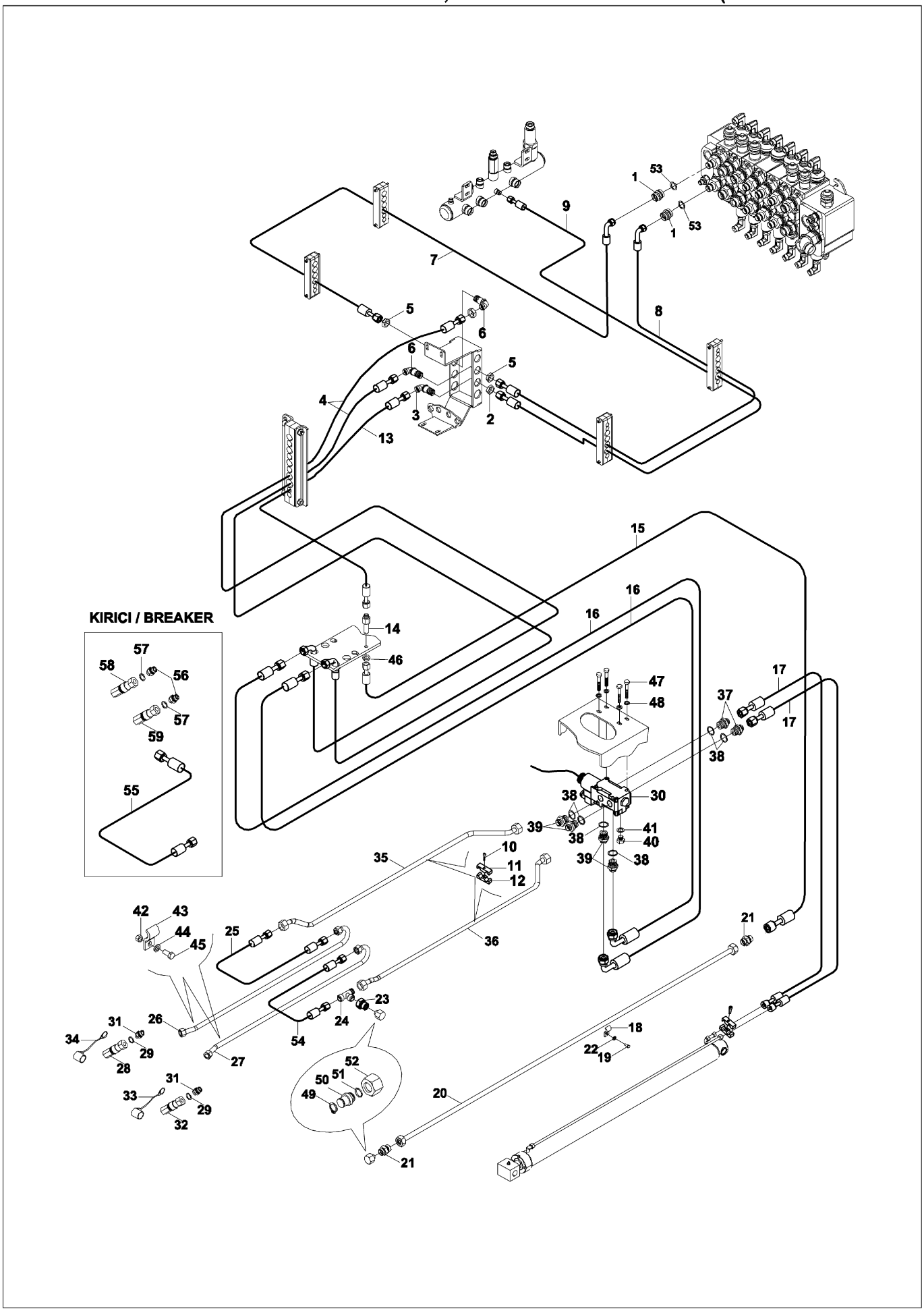

ÇİFT ETKİLİ HİDROLİK TESİSATI, BURGU/DÖNER KEPÇE & KIRICI (TELESKOPİK ARM & JOYS

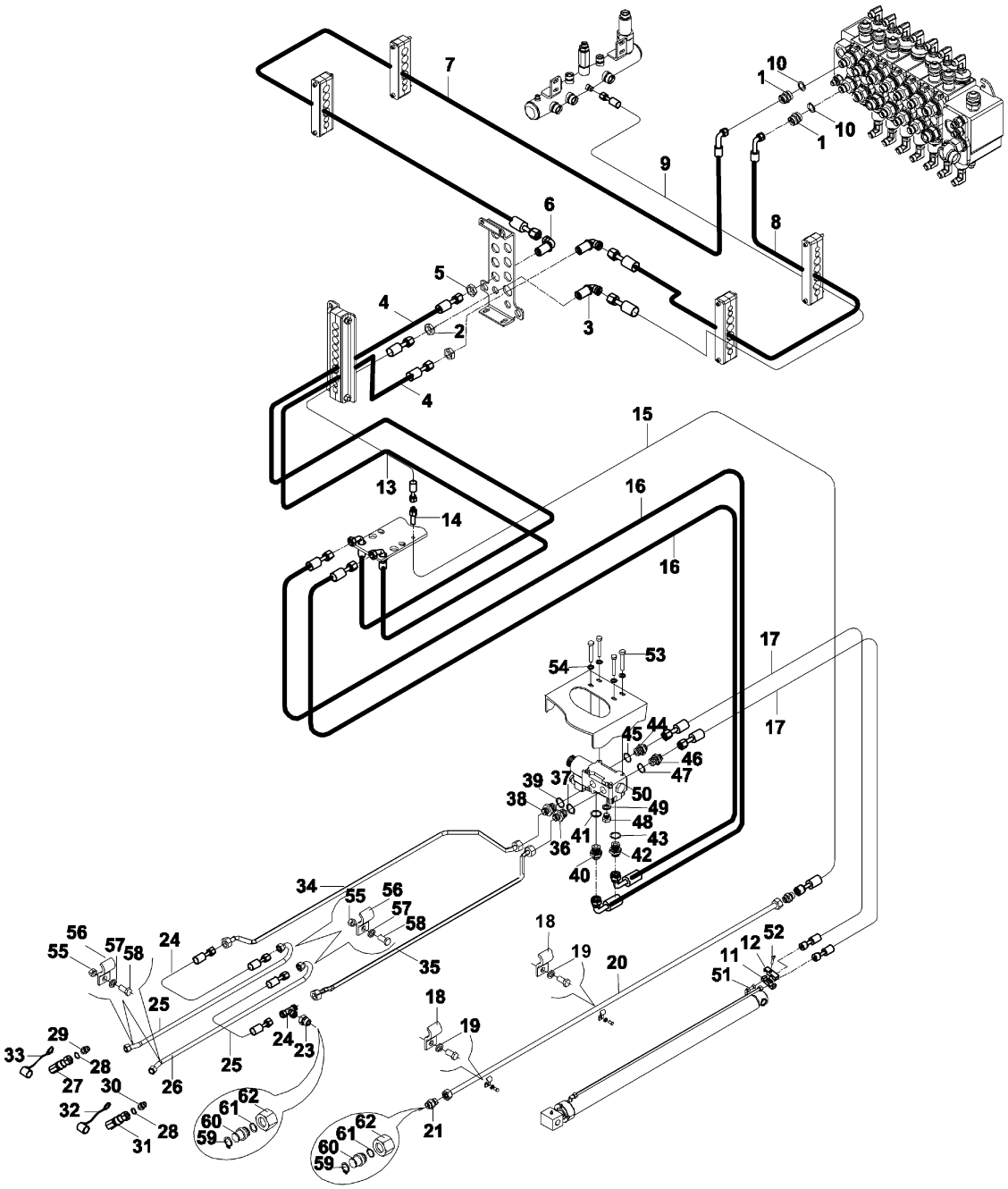

ÇİFT ETKİLİ HİDROLİK TESİSATI, BURGU/DÖNER KEPÇE & KIRICI (TELESKOPİK ARM & JOYS

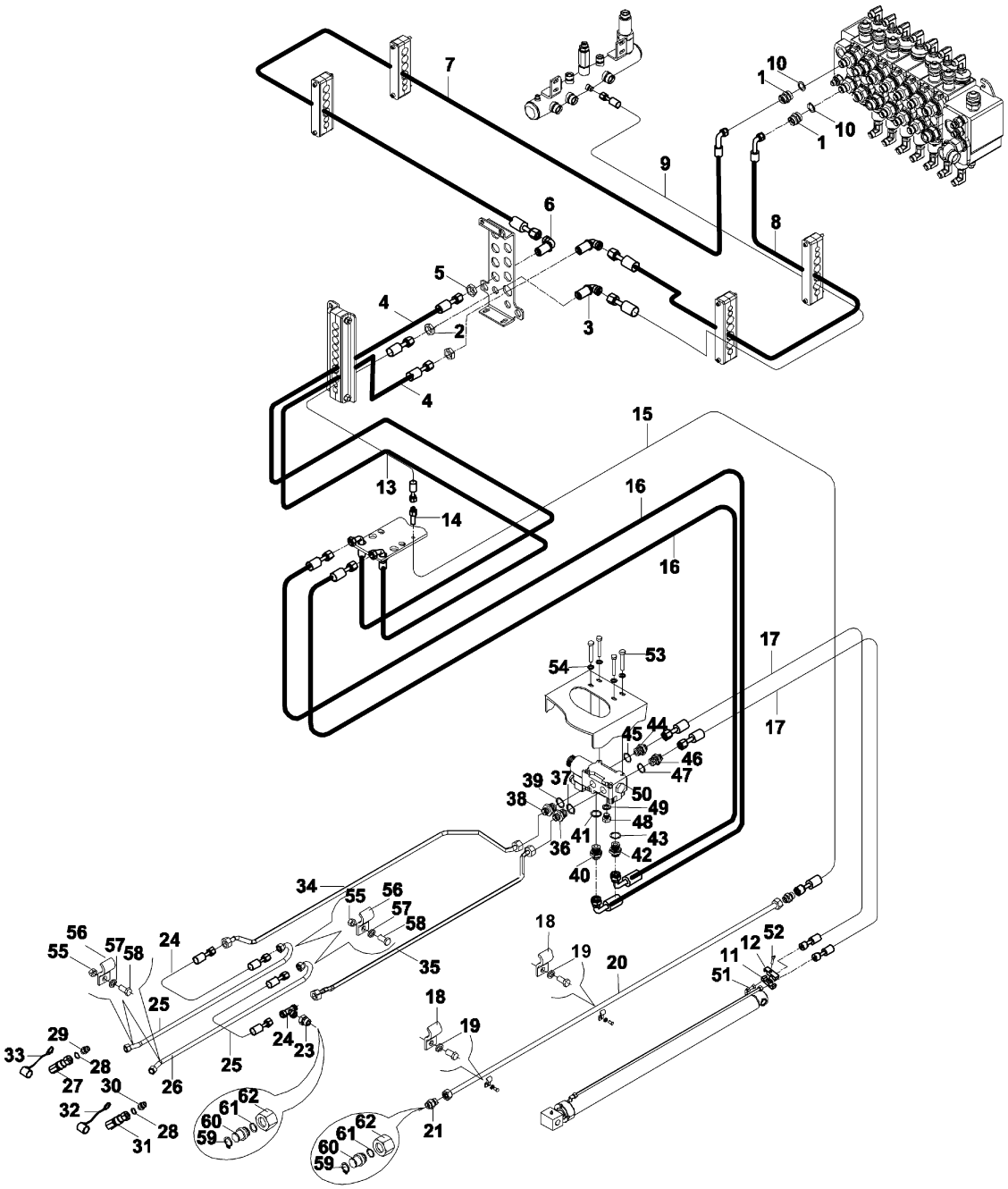

HİDROLİK TESİSAT, DİFERANSİYEL KİLİDİ
HYDRAULIC PIPING, DIFFERENTIAL LOCK

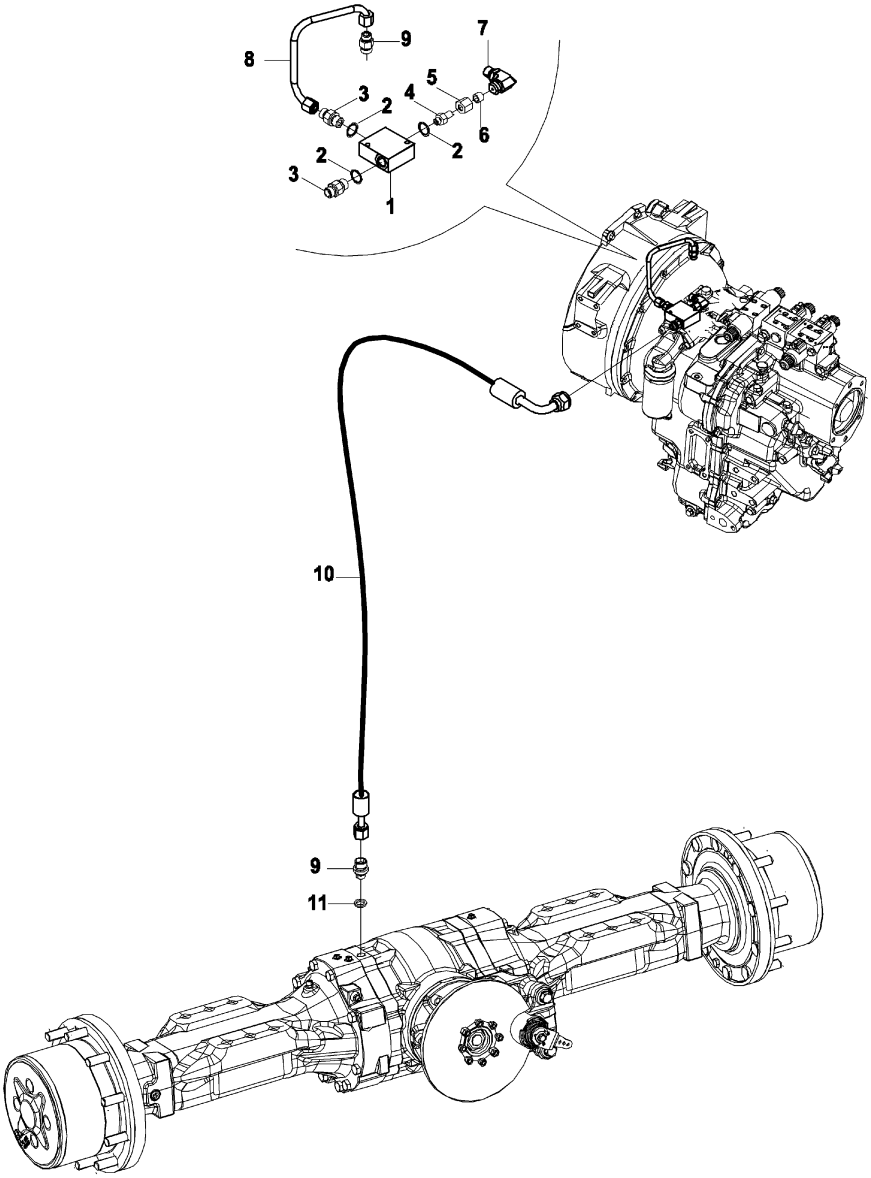

HİDROLİK, BOM KİLİDİ (MAFSALLI BOM) (OP)
HYDRAULIC, BOOM LOCKING (KNUCKLE BOOM) (OP)

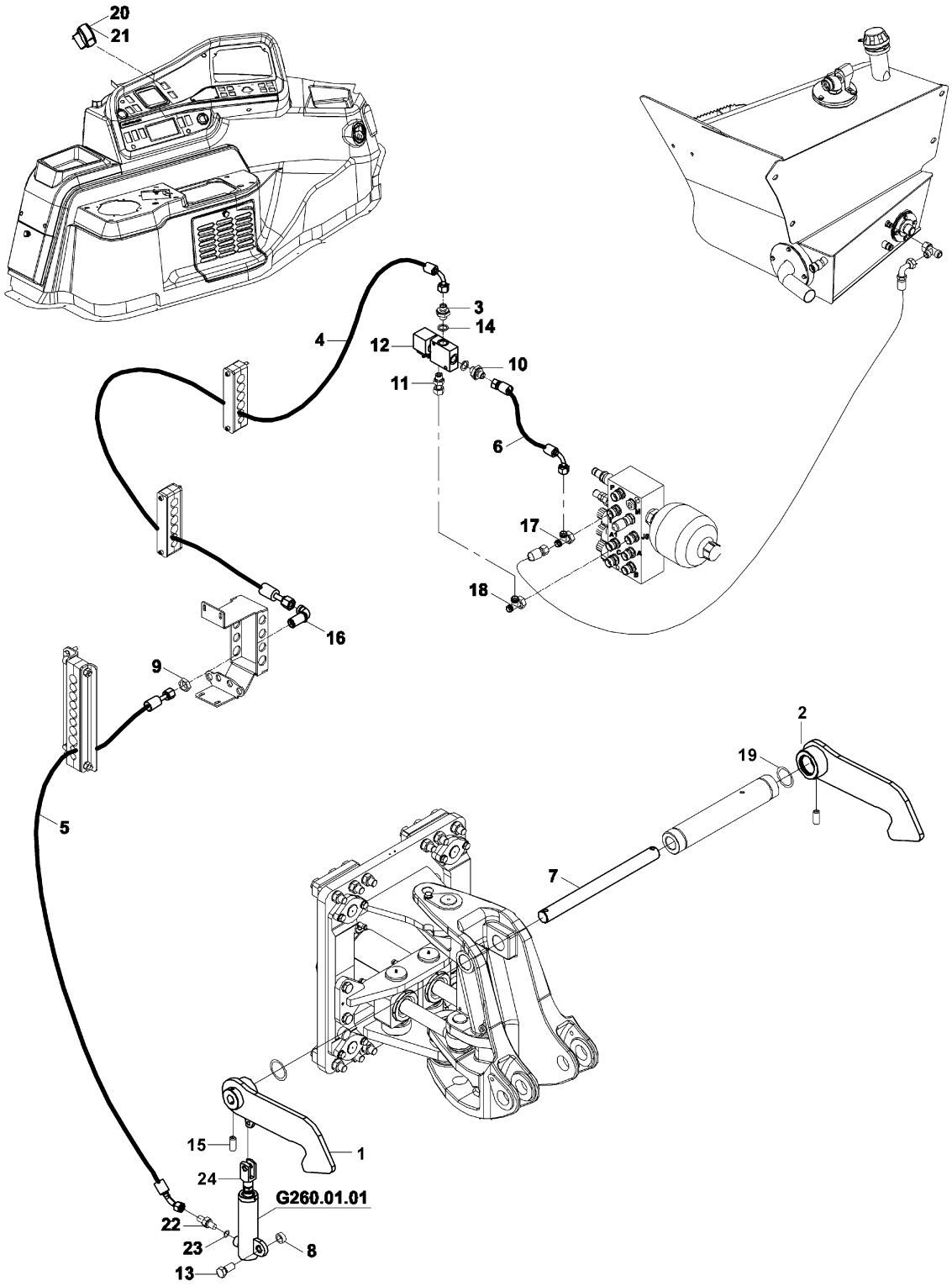

HİDROLİK, BOM KİLİDİ
HYDRAULIC, BOOM LOCKING

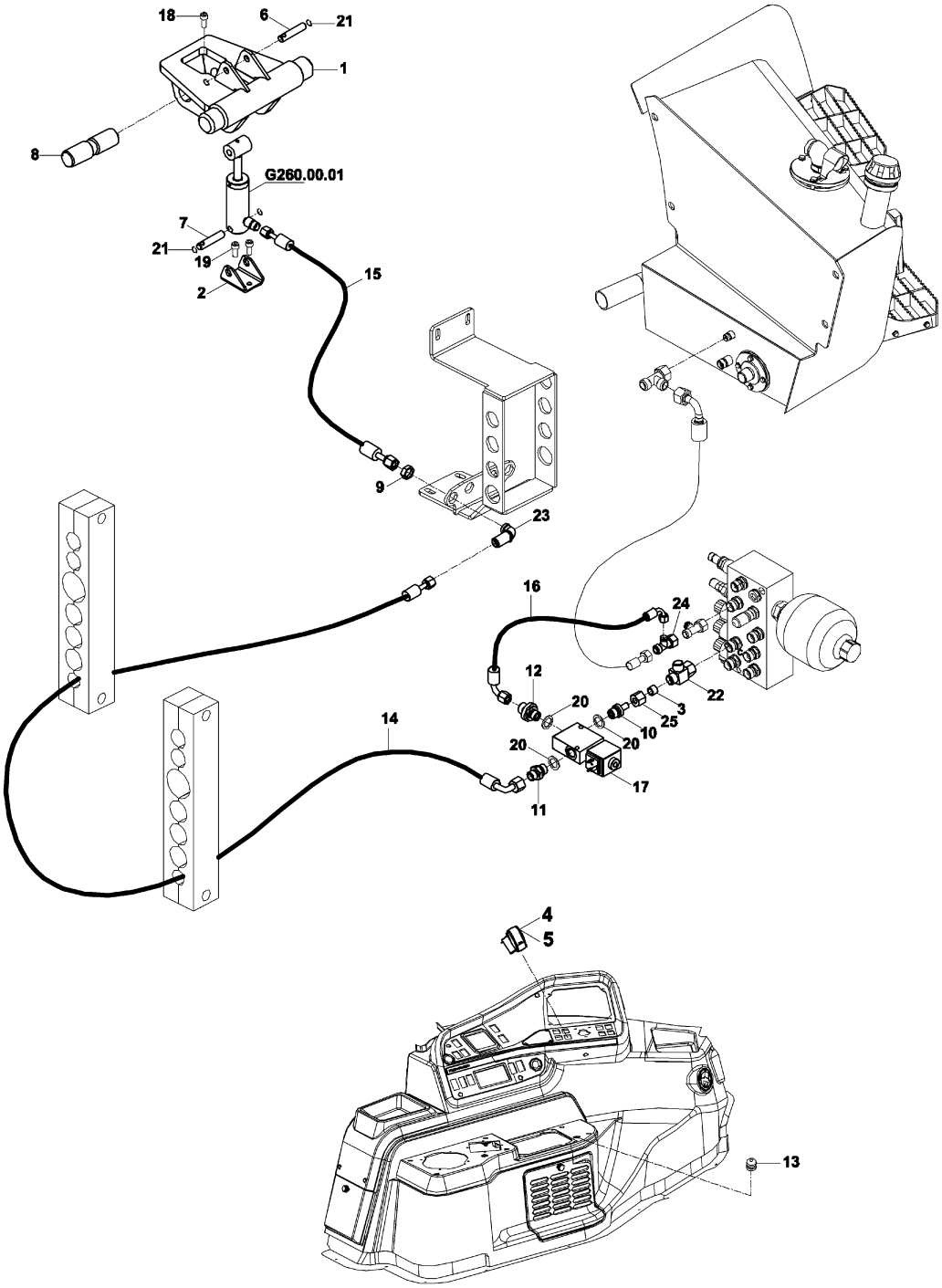

HİDROLİK, BOM KİLİDİ (KAZ AYAK) (OP)
HYDRAULIC, BOOM LOCKING (WING TYPE) (OP)

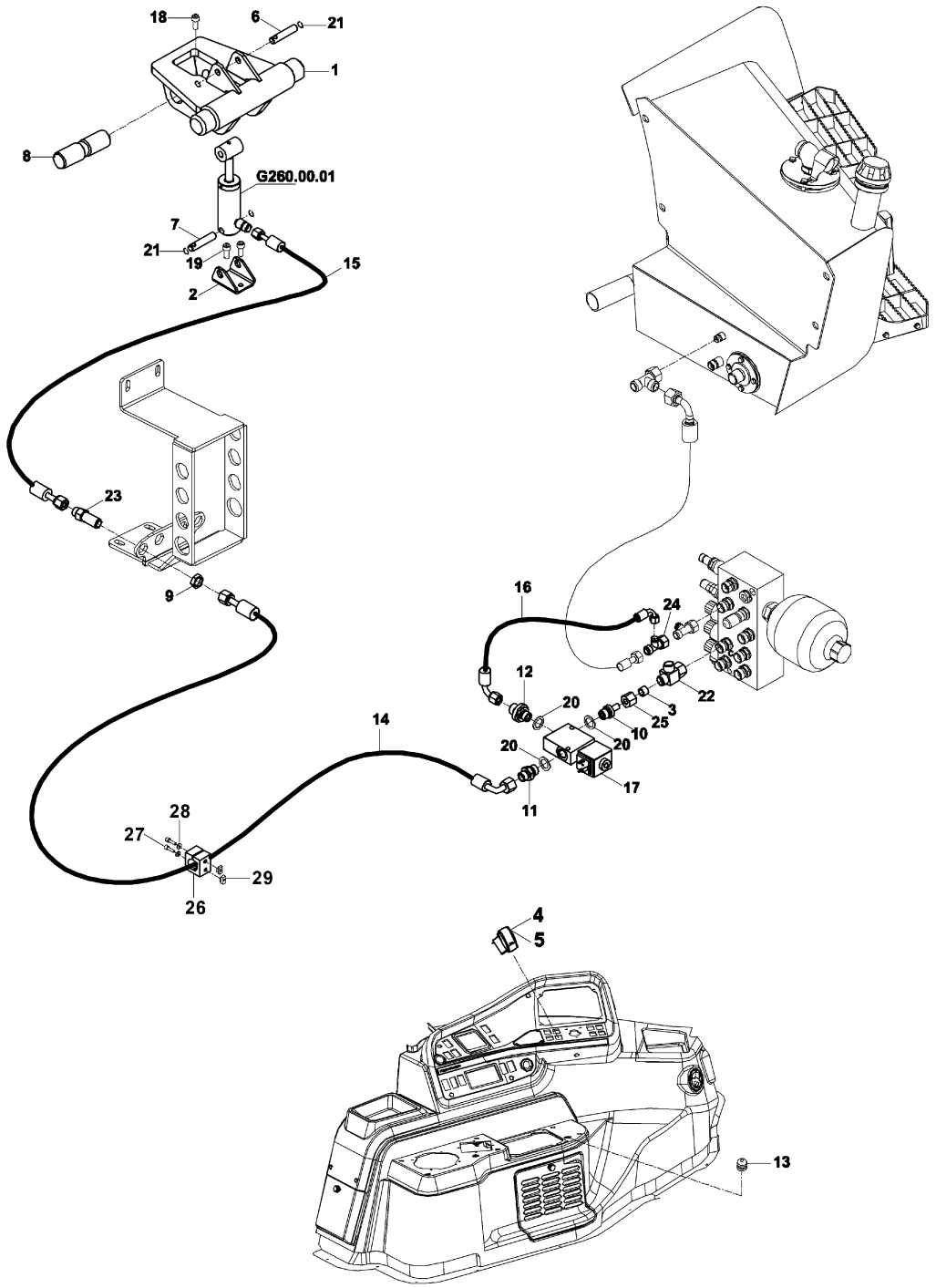

DİŞLİ POMPA
GEAR PUMP

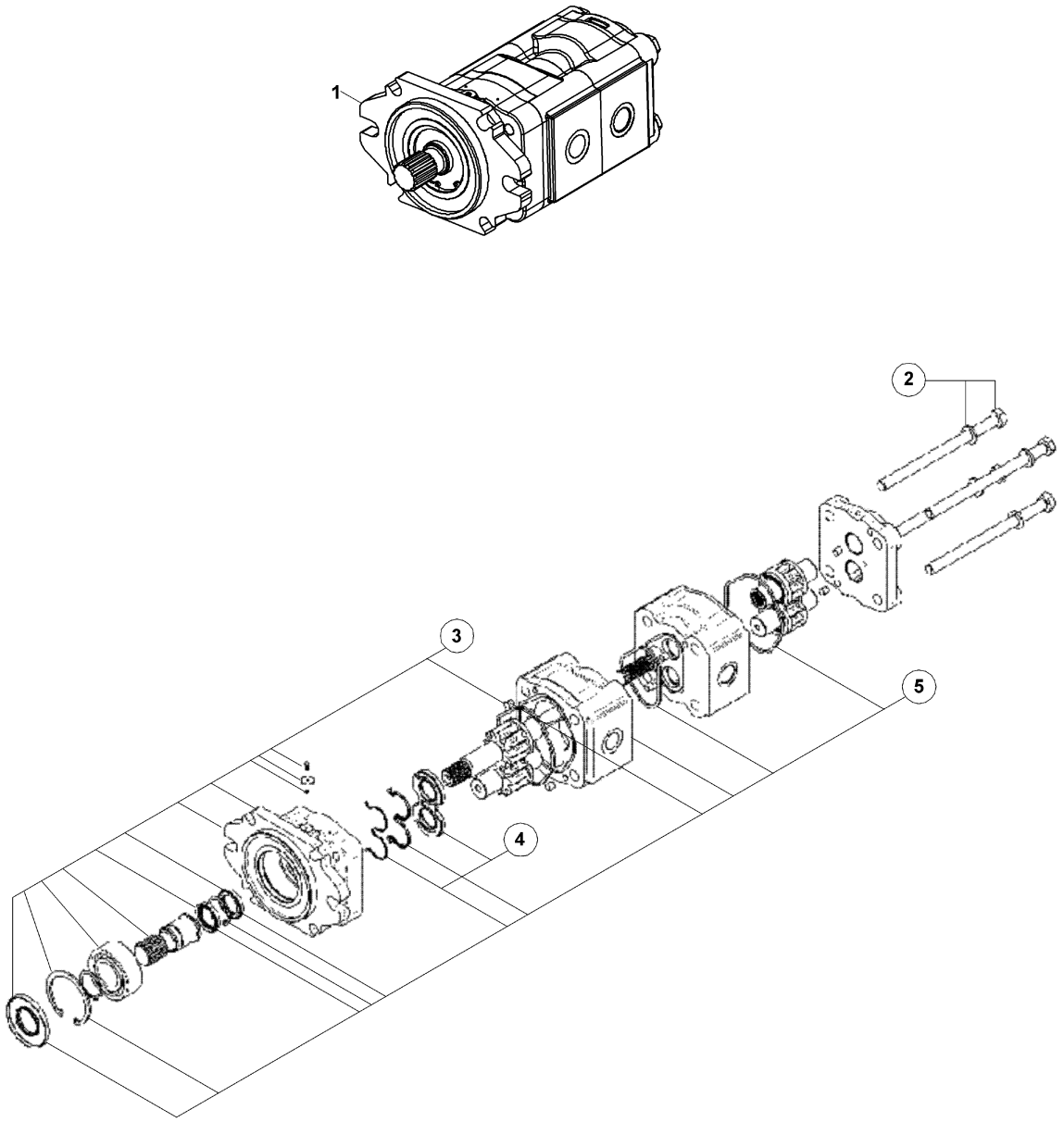

PİSTONLU POMPA
PISTON PUMP

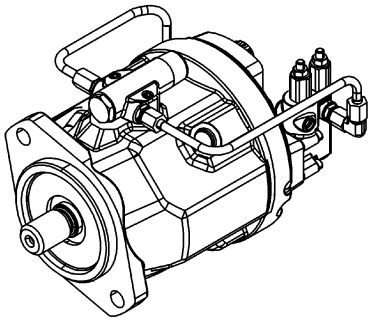

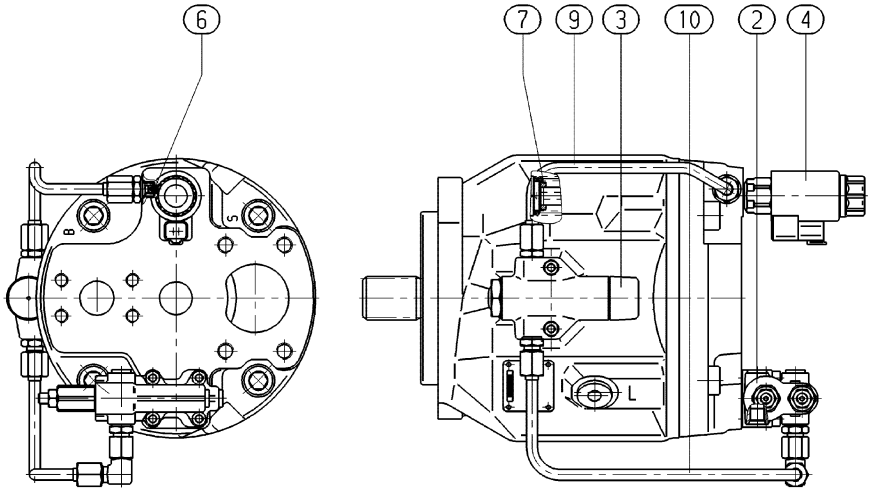

YÜKLEYİCİ KUMANDA VALFİ (TİP B-LS)
LOADER CONTROL VALVE, MECHANIC (TİP B-LS)

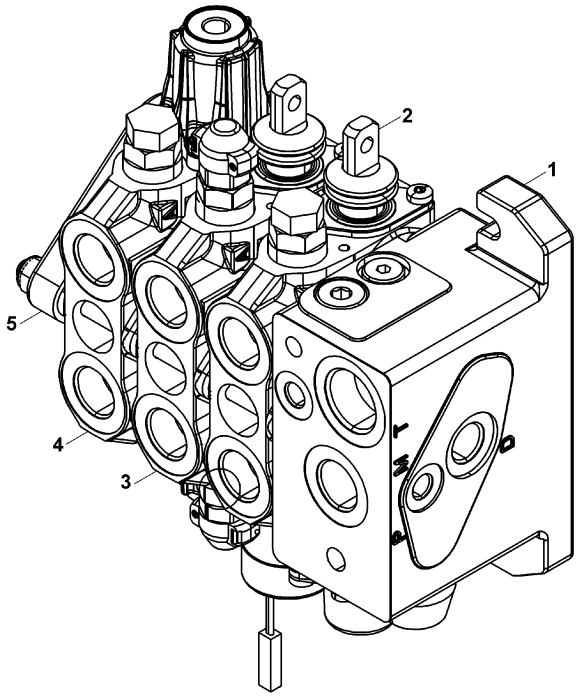

YÜKLEYİCİ KUMANDA VALFİ- GİRİŞ BLOĞU (TİP B)
LOADER CONTROL VALVE-INLET BLOCK (TYPE B)

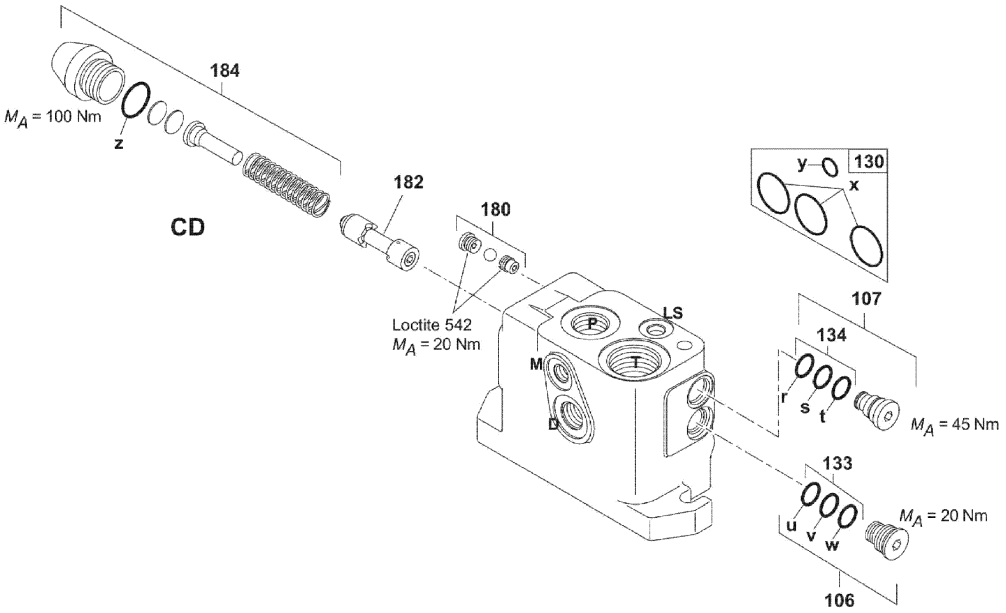

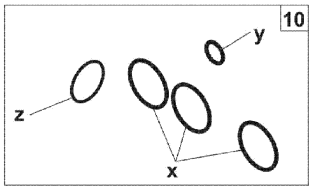

YÜKLEYİCİ KUMANDA VALFİ- KALDIRICI SİLİNDİR, KONTROL BLOĞU (TİP B)
LOADER CONTROL VALVE- LIFT CYLINDER CONTROL BLOCK (TYPE B)

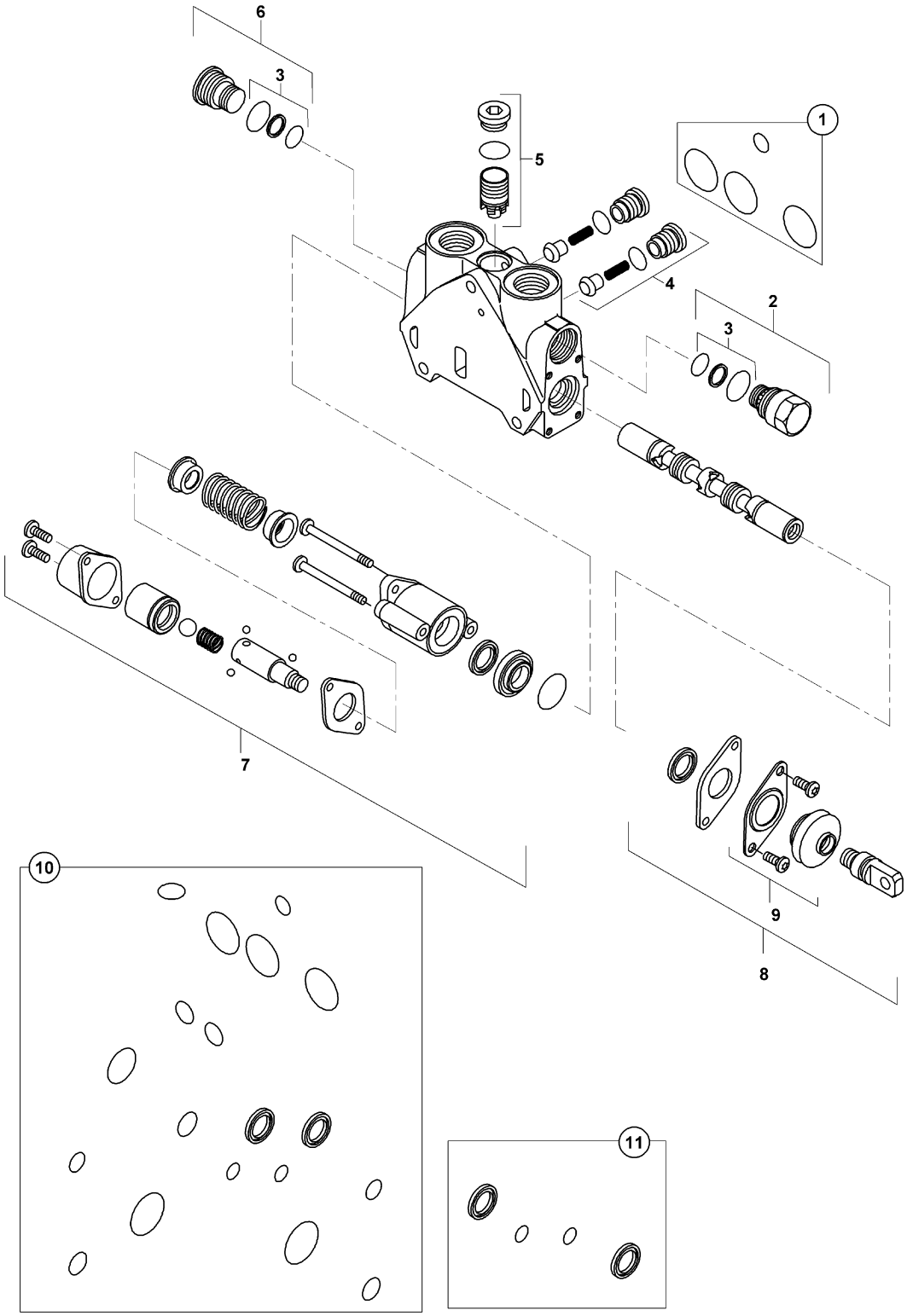

YÜKLEYİCİ KUMANDA VALFİ- ARM SİLİNDİR KONTROL, BLOĞU (TİP B)
LOADER CONTROL VALVE- ARM CYLINDER CONTROL BLOCK (TYPE B)

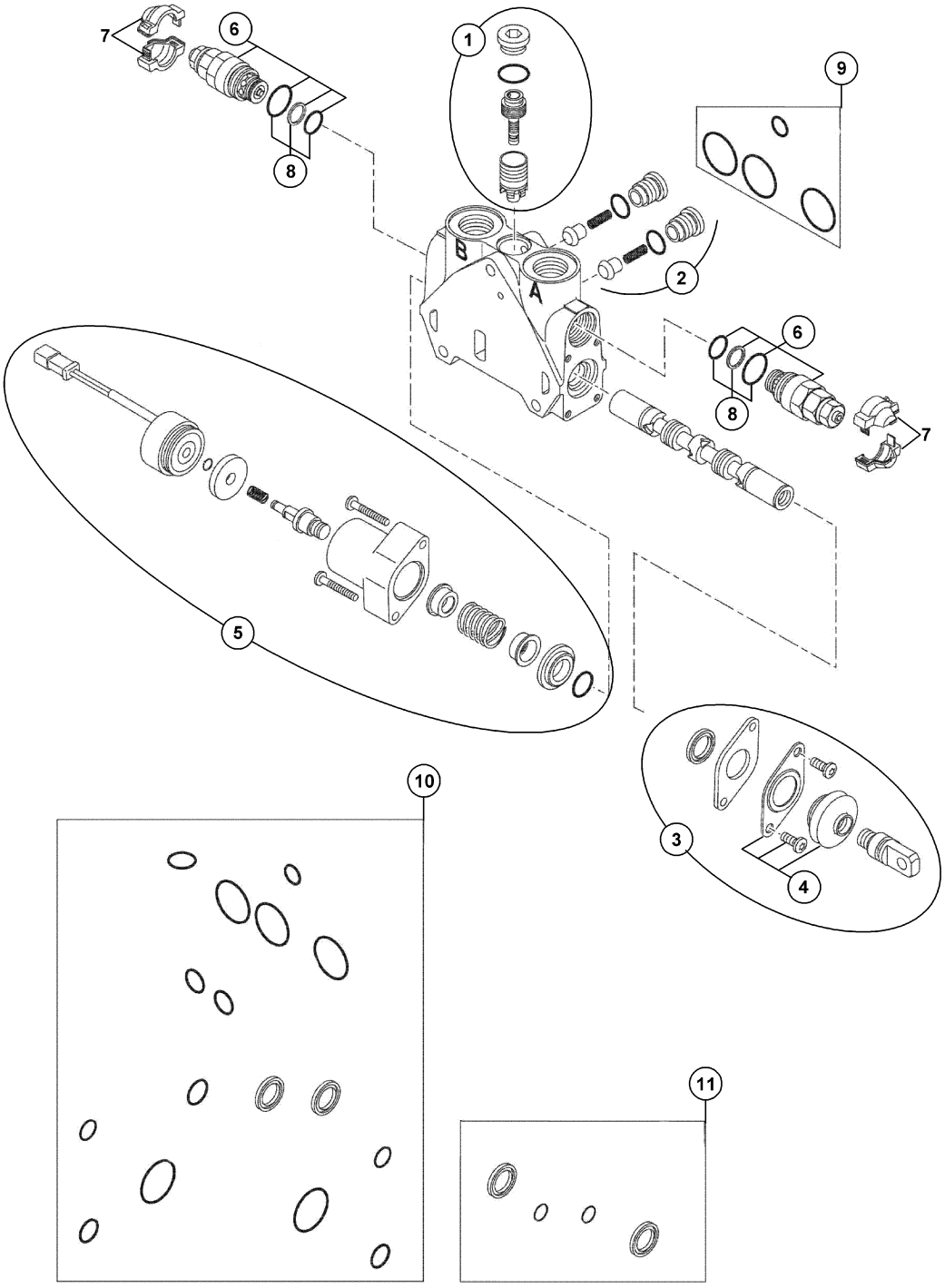

YÜKLEYİCİ KUMANDA VALFİ- AÇILIR KEPÇE SİLİNDİRİ, KONTROL BLOĞU(TİP B)
LOADER CONTROL VALVE- CLAMSHOVEL RAM CONTROL BLOCK (TYPE B)

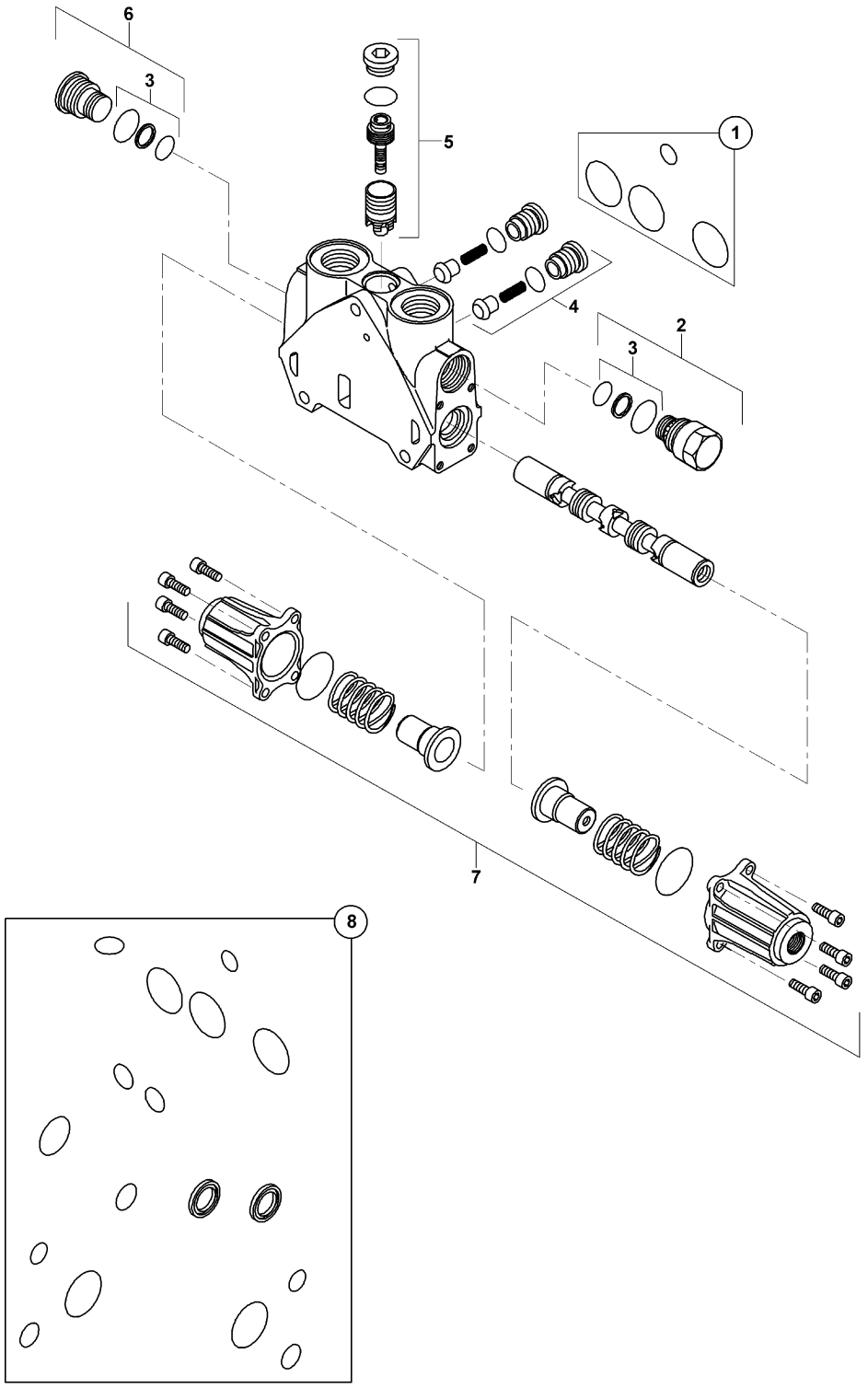

YÜKLEYİCİ KUMANDA VALFİ- ÇIKIŞ BLOĞU (TİP B)
LOADER CONTROL VALVE- OUTLET BLOCK (TYPE B)

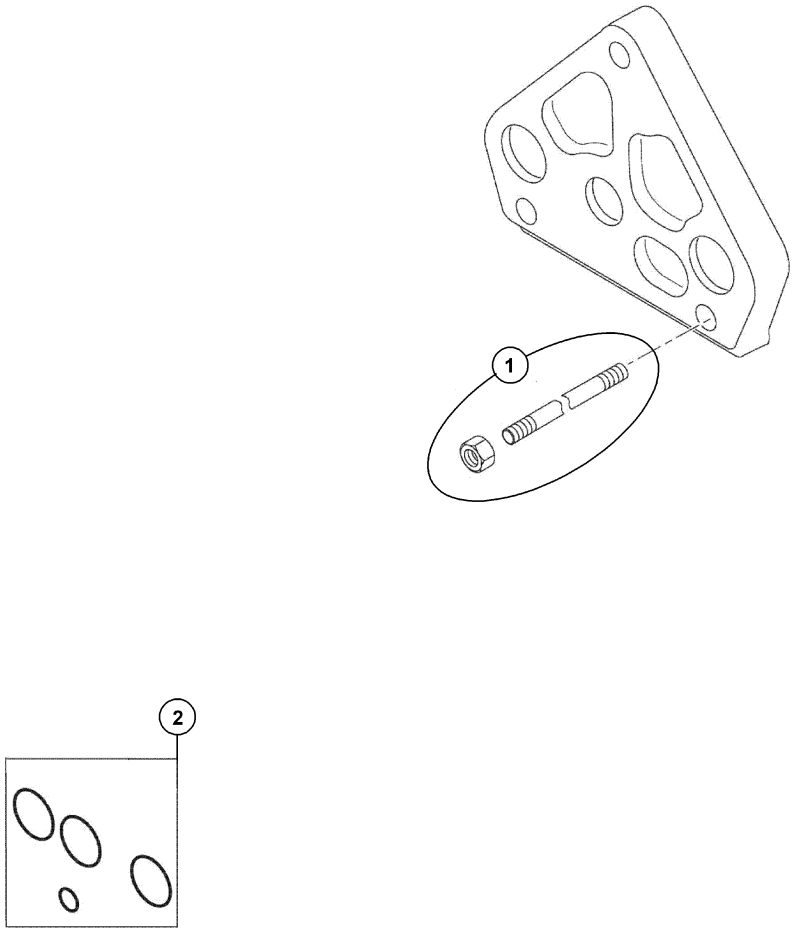

YÜKLEYİCİ KUMANDA VALFİ, AÇILIR KEPÇE (TİP B - PB)
LOADER CONTROL VALVE, MULTIPURPOSE BUCKET (TYPE B - PB)

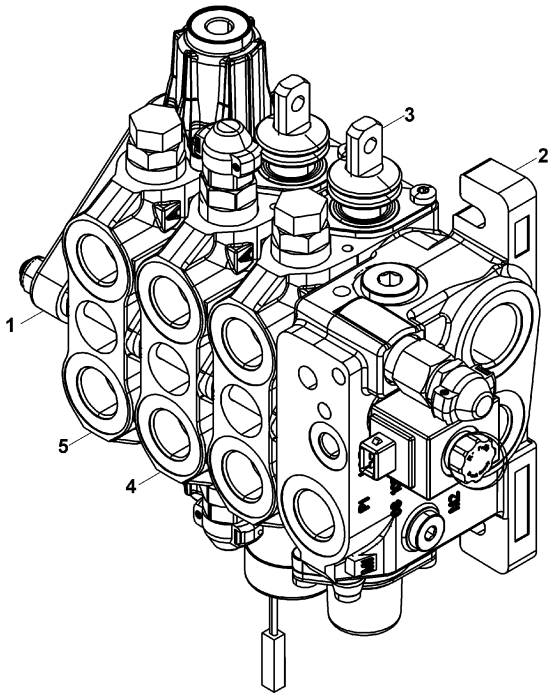

YÜKLEYİCİ KUMANDA VALFİ- ARM SİLİNDİR KONTROL, BLOĞU (TİP B)
LOADER CONTROL VALVE- ARM CYLINDER CONTROL BLOCK (TYPE B)

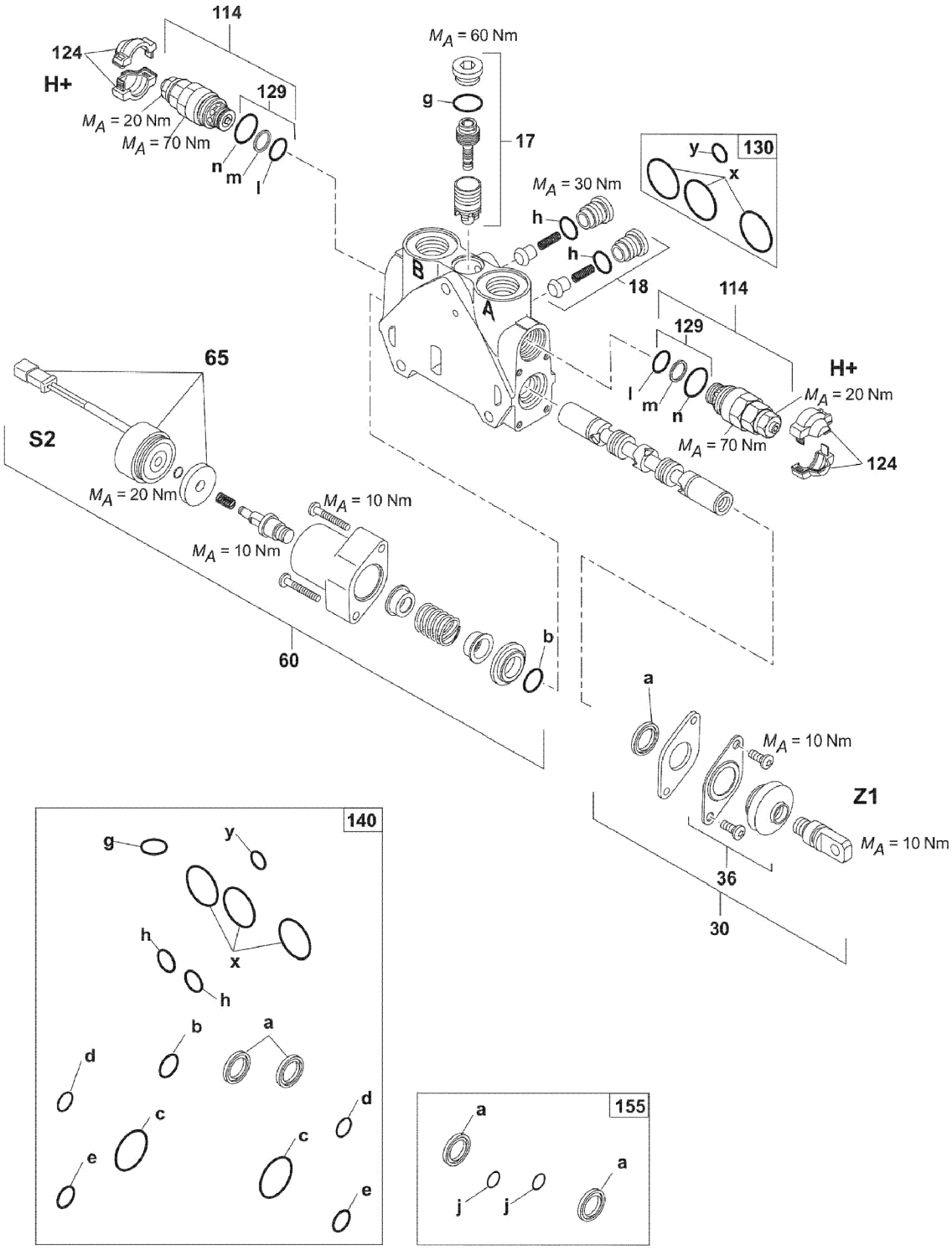

YÜKLEYİCİ KUMANDA VALFİ- ÇIKIŞ BLOĞU (TİP B)
LOADER CONTROL VALVE- OUTLET BLOCK (TYPE B)

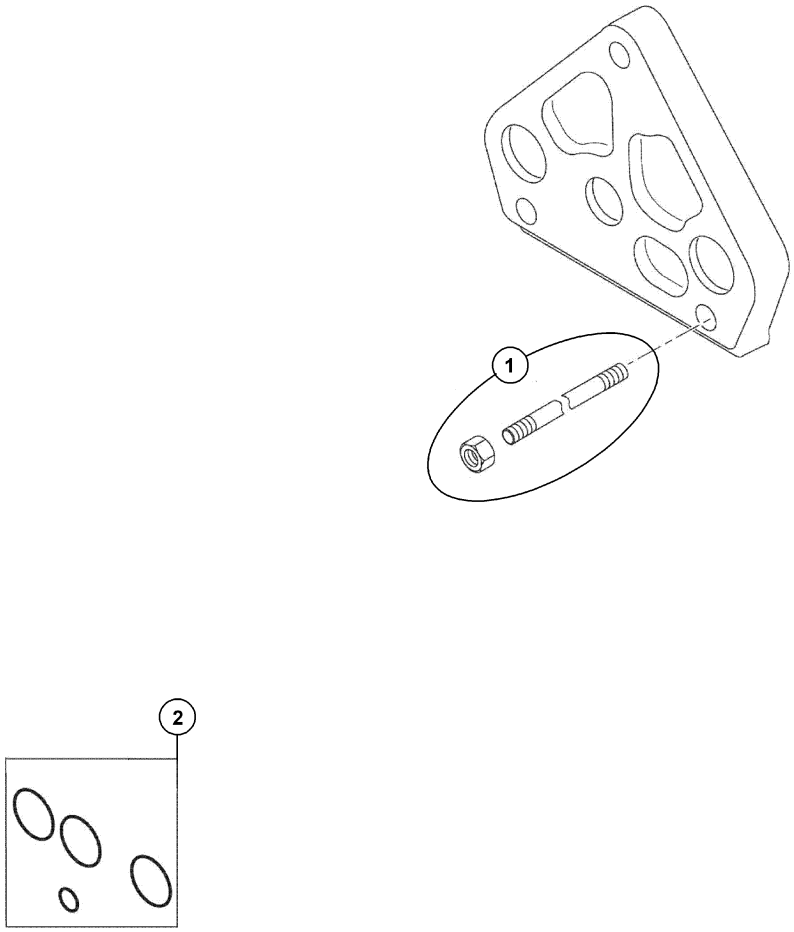

YÜKLEYİCİ KUMANDA VALFİ- GİRİŞ BLOĞU (TİP B-PB)
LOADER CONTROL VALVE-INLET BLOCK (TYPE B-PB)

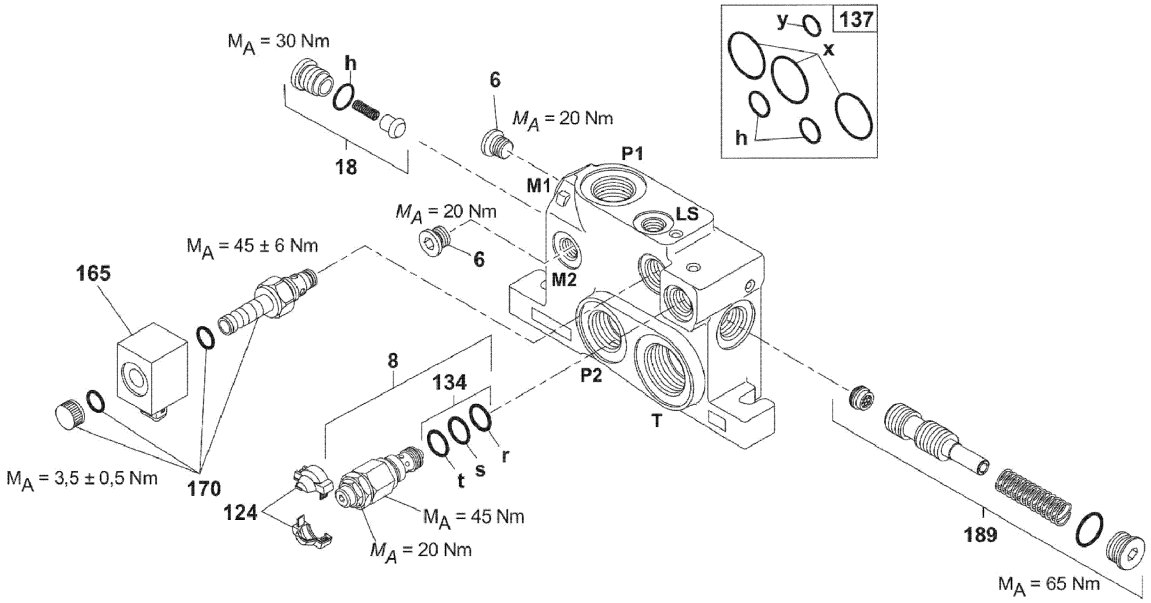

YÜKLEYİCİ KUMANDA VALFİ- KALDIRICI SİLİNDİR, KONTROL BLOĞU (TİP B)
LOADER CONTROL VALVE- LIFT CYLINDER CONTROL BLOCK (TYPE B)

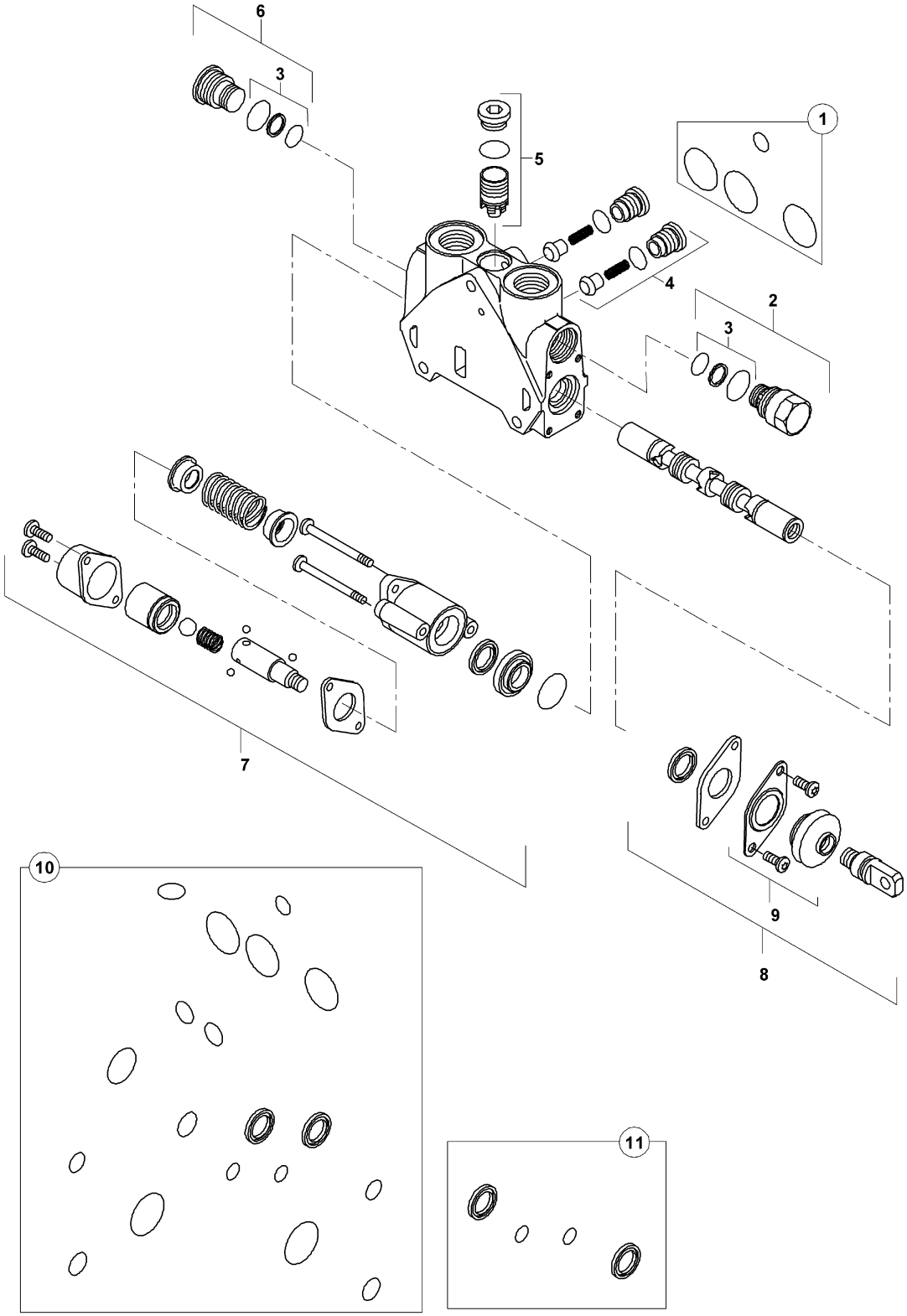

YÜKLEYİCİ KUMANDA VALFİ-AÇILIR KEPÇE SİLİNDİRİ,KONTROL BLOĞU(TİP B)
LOADER CONTROL VALVE- CLAMSHOVEL RAM CONTROL BLOCK (TYPE B)

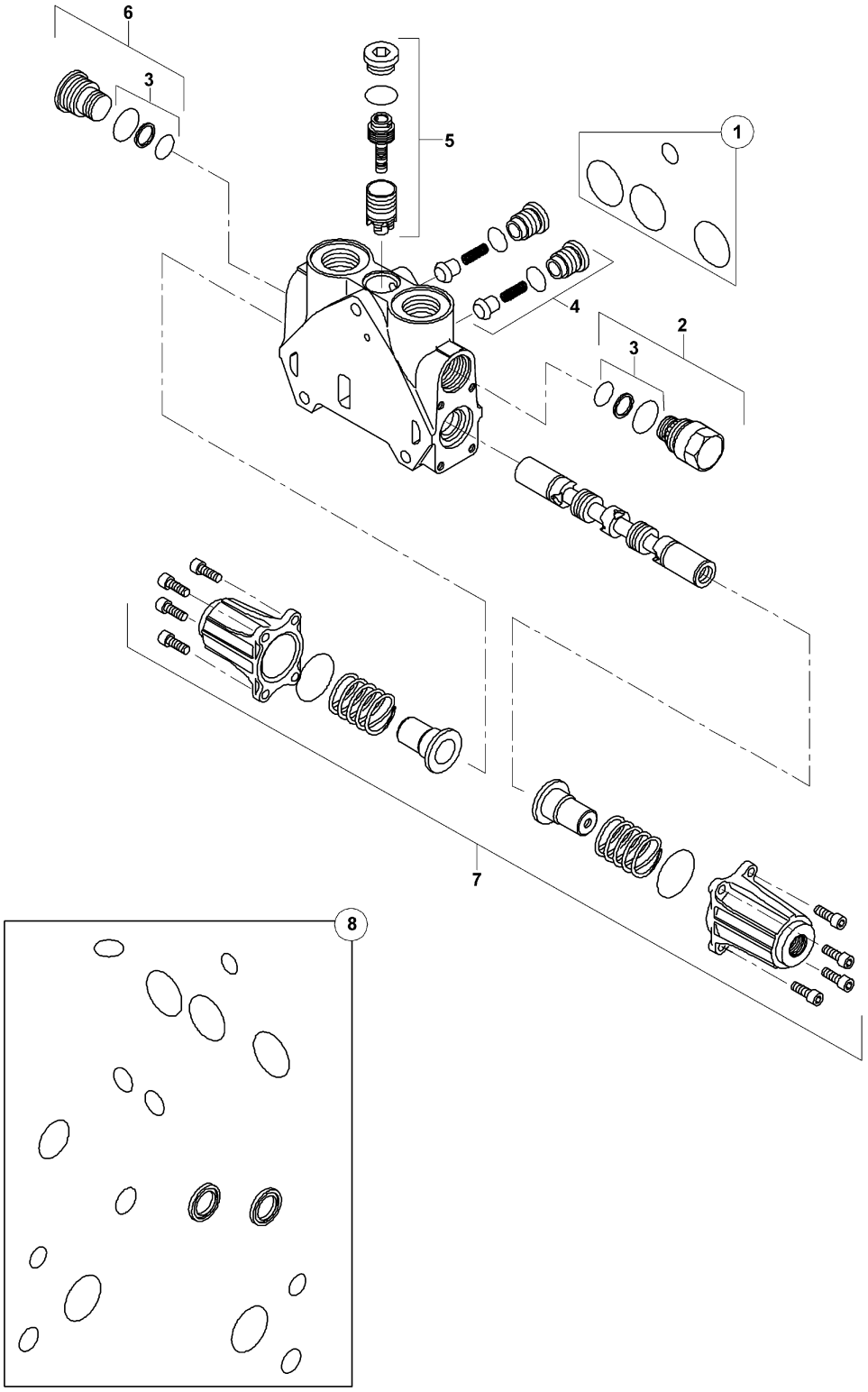

KAZICI KUMANDA VALFİ, JOYSTİCK (PİSTONLU POMPA & TİP B, FS)
BACKHOE CONTROL VALVE, JOYSTICK (PISTON PUMP & TYPE B, FS)

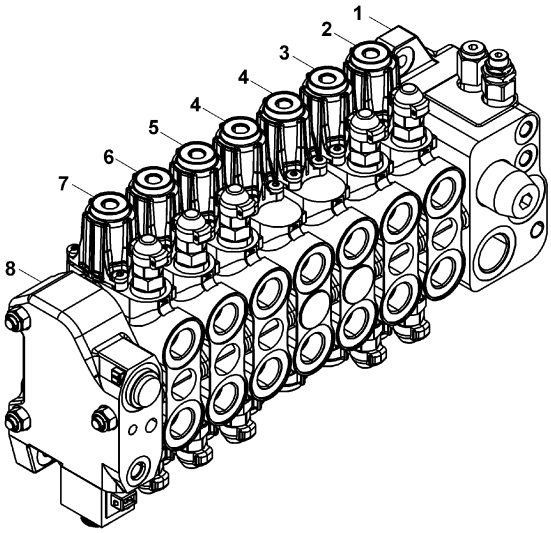

KAZICI KUMANDA VALFİ- GİRİŞ BLOĞU (TİP B)
BACKHOE CONTROL VALVE-INLET BLOCK (TYPE B)

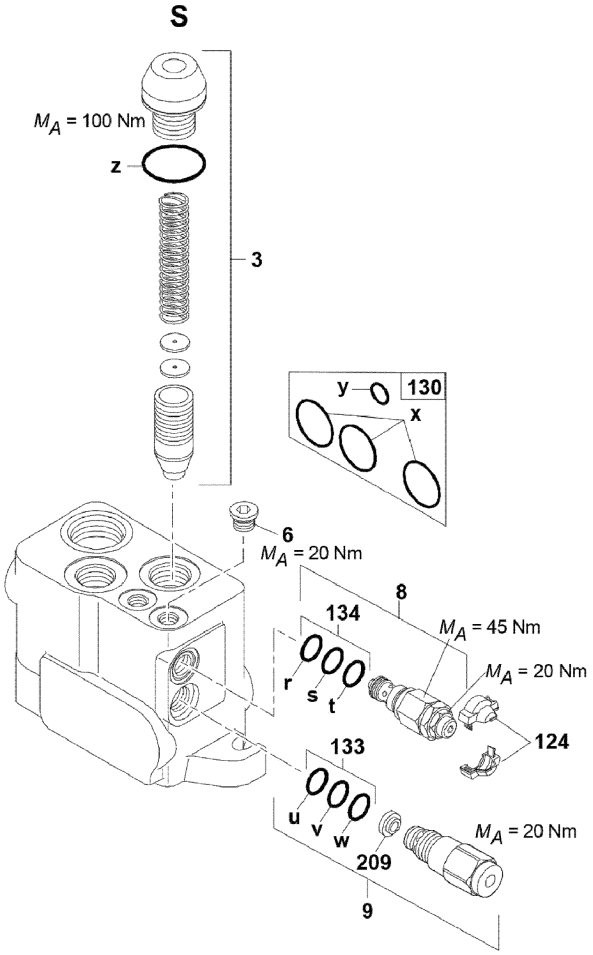

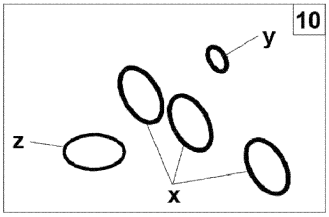

KAZICI KUMANDA VALFİ- ÇIKIŞ BLOĞU (TİP B)
BACKHOE CONTROL VALVE -OUTLET BLOCK (TYPE B)

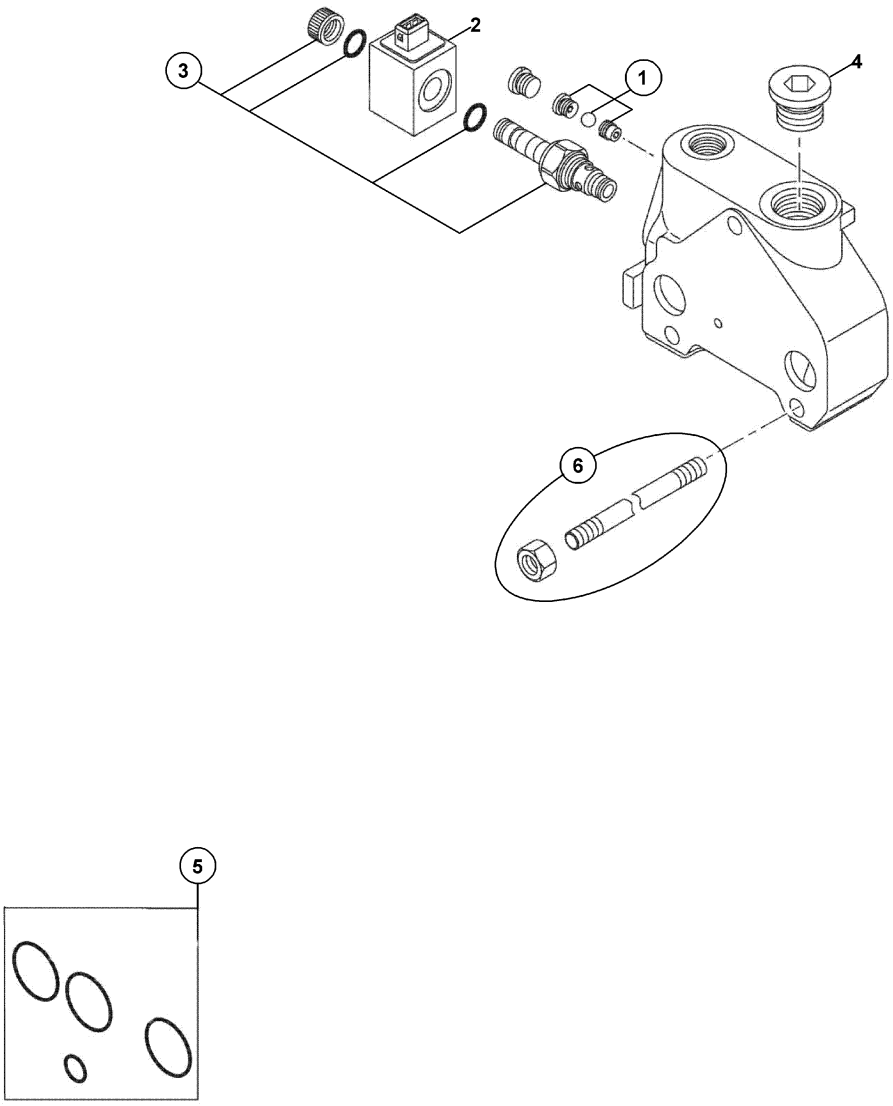

KAZICI KUMANDA VALFİ ARM KONTROL BLOĞU, JOYSTICK (TİP B)
BACKHOE CONTROL VALVE ARM CONTROL BLOCKS, JOYSTICK (TYPE B)

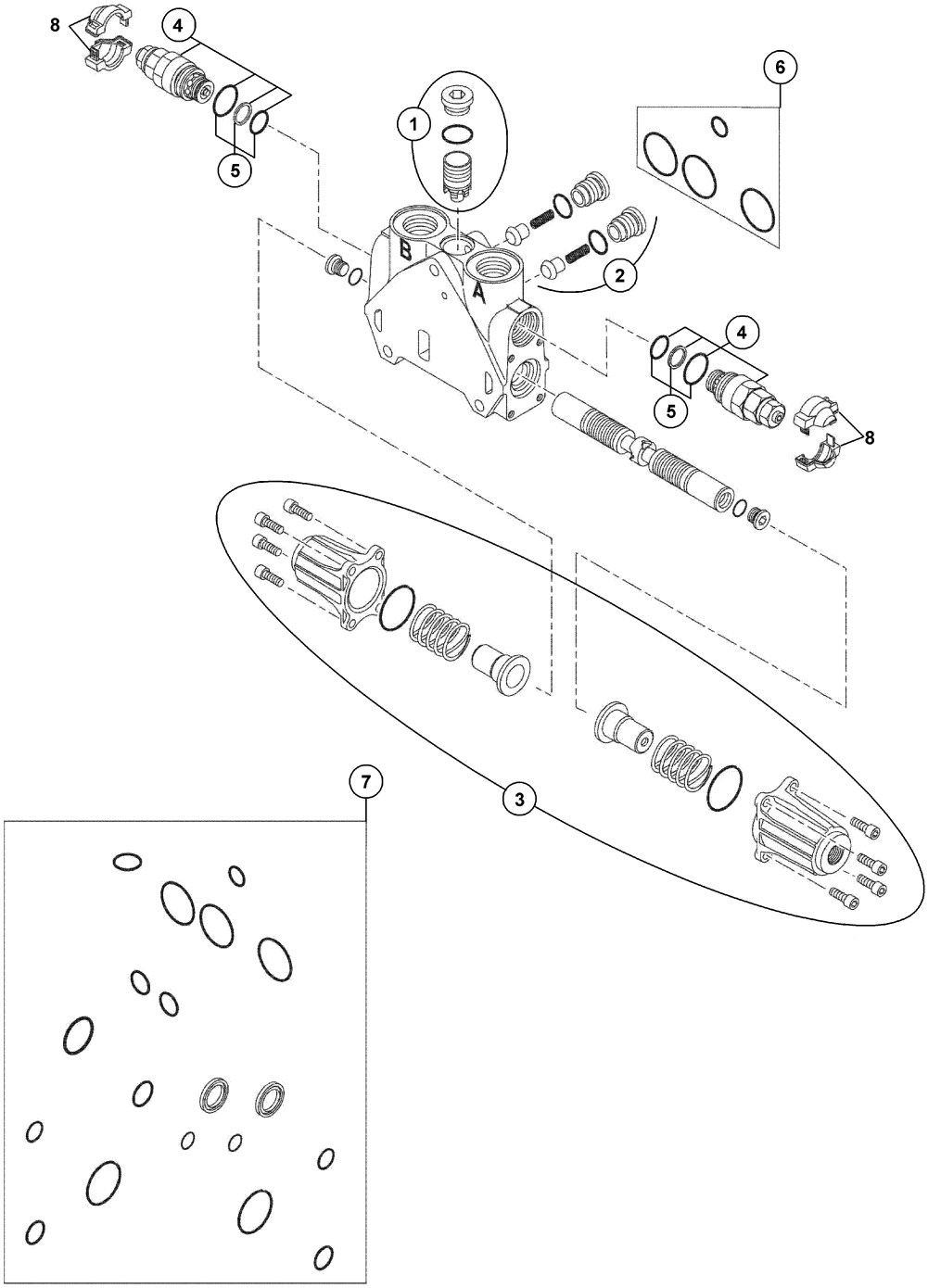

KAZICI KUMANDA VALFİ- DÖNÜŞ SİLİNDİRİ KONTROL BLOĞU, JOYSTICK (TİP B)
BACKHOE CONTROL VALVE-SLEW SWING RAM CONTROL BLOCK, JOYSTICK (TYPE

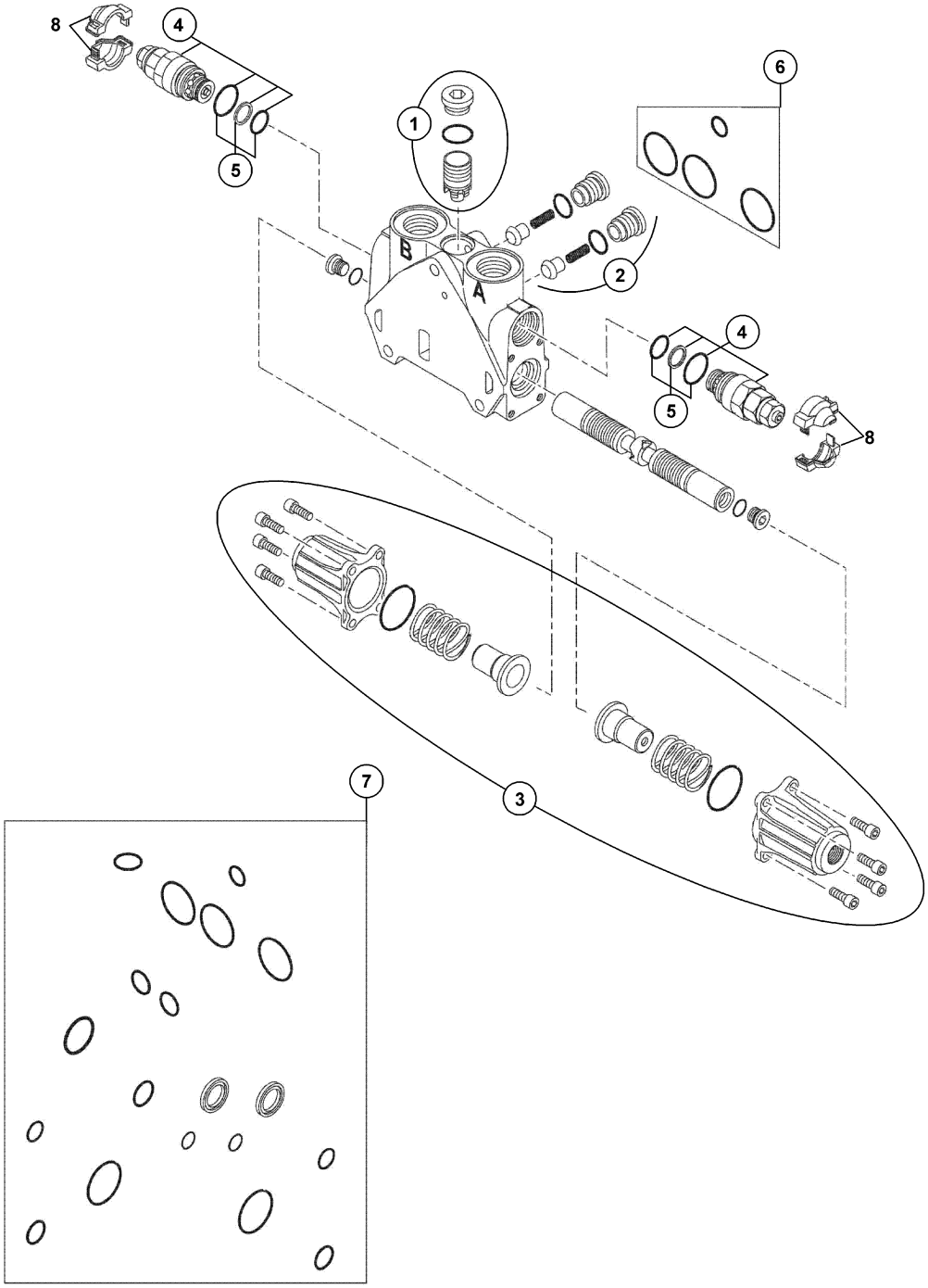

KAZICI KUMANDA VALFİ- AYAK SİLİNDİRİ KONTROL BLOĞU, JOYSTICK (TİP B)
BACKHOE CONTROL VALVE-STABILIZER RAM CONTROL BLOCK, JOYSTICK (TYPE

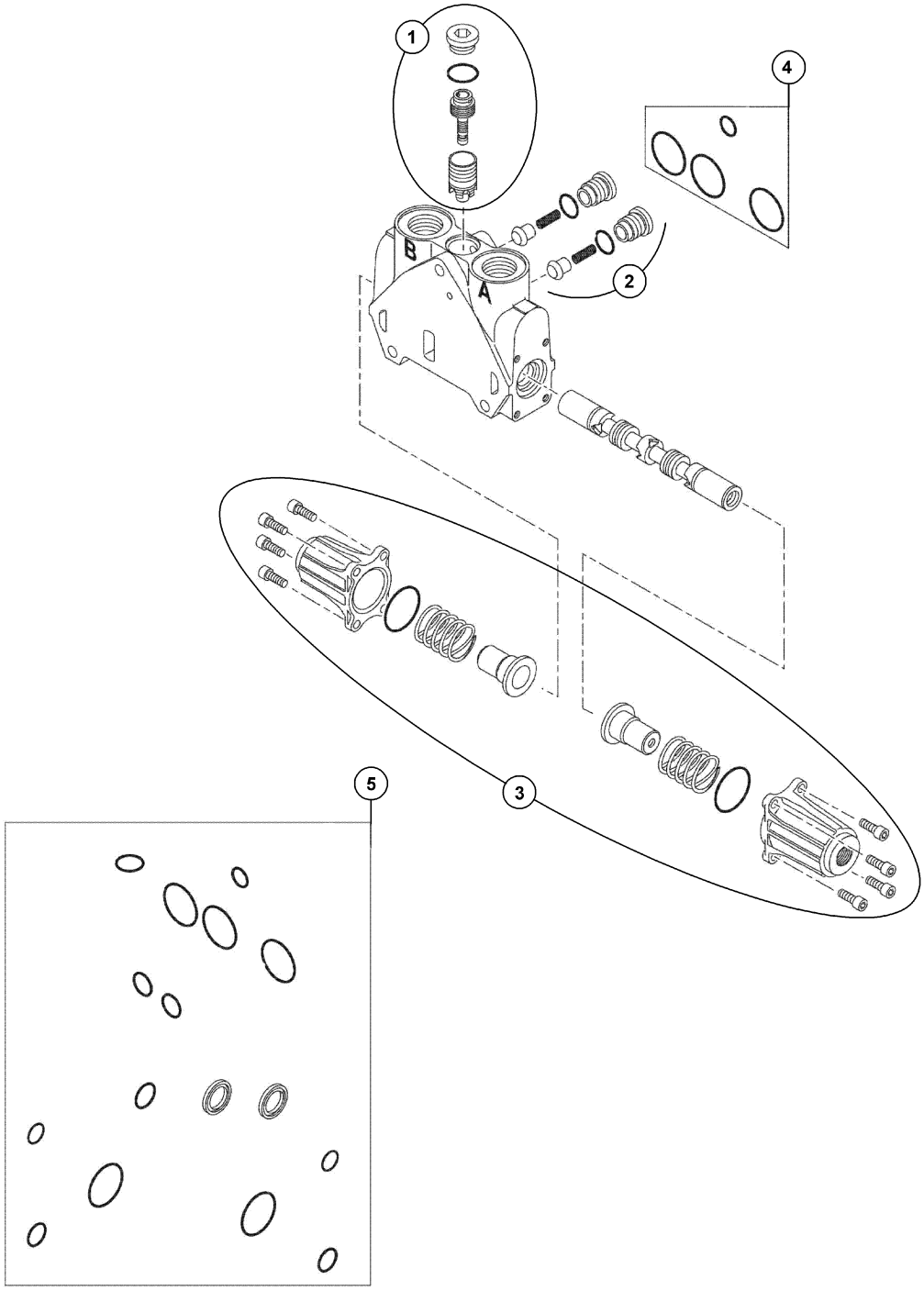

KAZICI KUMANDA VALFİ- KIVIRICI SİLİNDİR KONTROL BLOĞU, JOYSTICK (TİP B)
BACKHOE CONTROL VALVE BUCKET RAM CONTROL BLOCK, JOYSTICK (TYPE B)

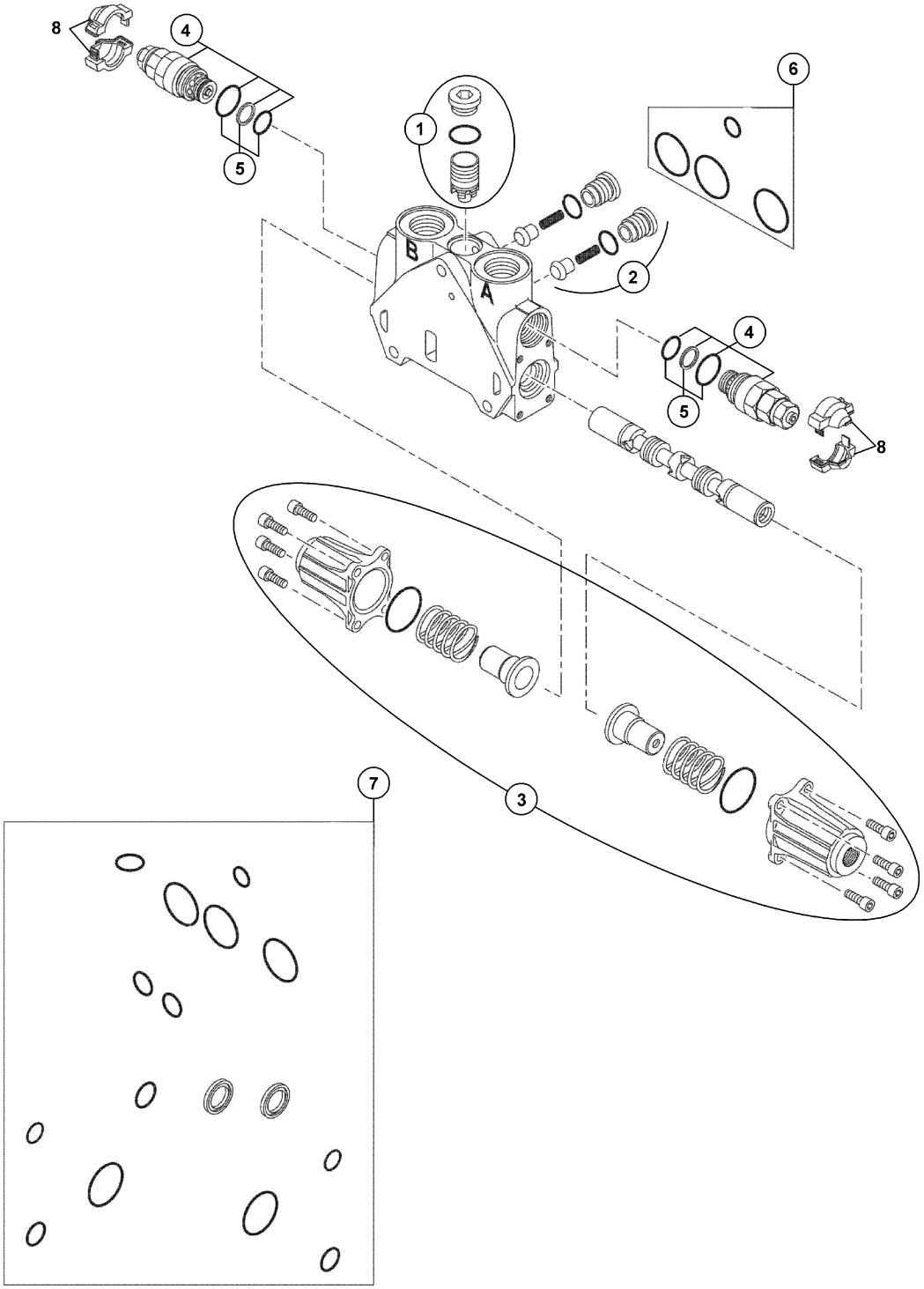

KAZICI KUMANDA VALFİ BOM KONTROL BLOĞU,JOYSTICK (TİP B)
BACKHOE CONTROL VALVE BOOM CONTROL BLOCKS, JOYSTICK (TYPE B)

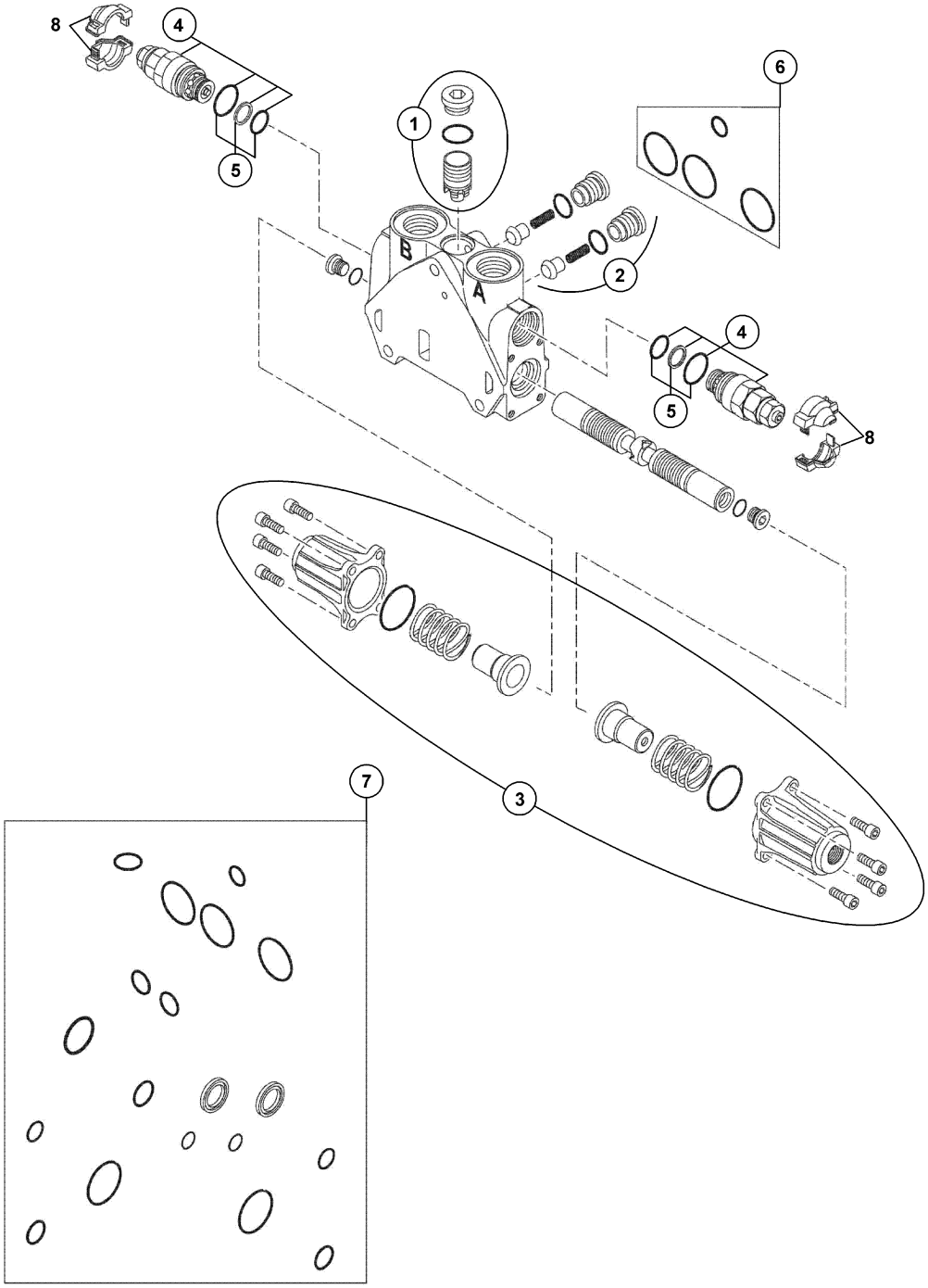

KAZICI KUMANDA VALFİ TELESKOPİK KONTROL BLOĞU, JOYSTICK (TİP B)
BACKHOE CONTROL VALVE TELESCOPIC CONTROL BLOCKS, JOYSTICK (TYPE B)

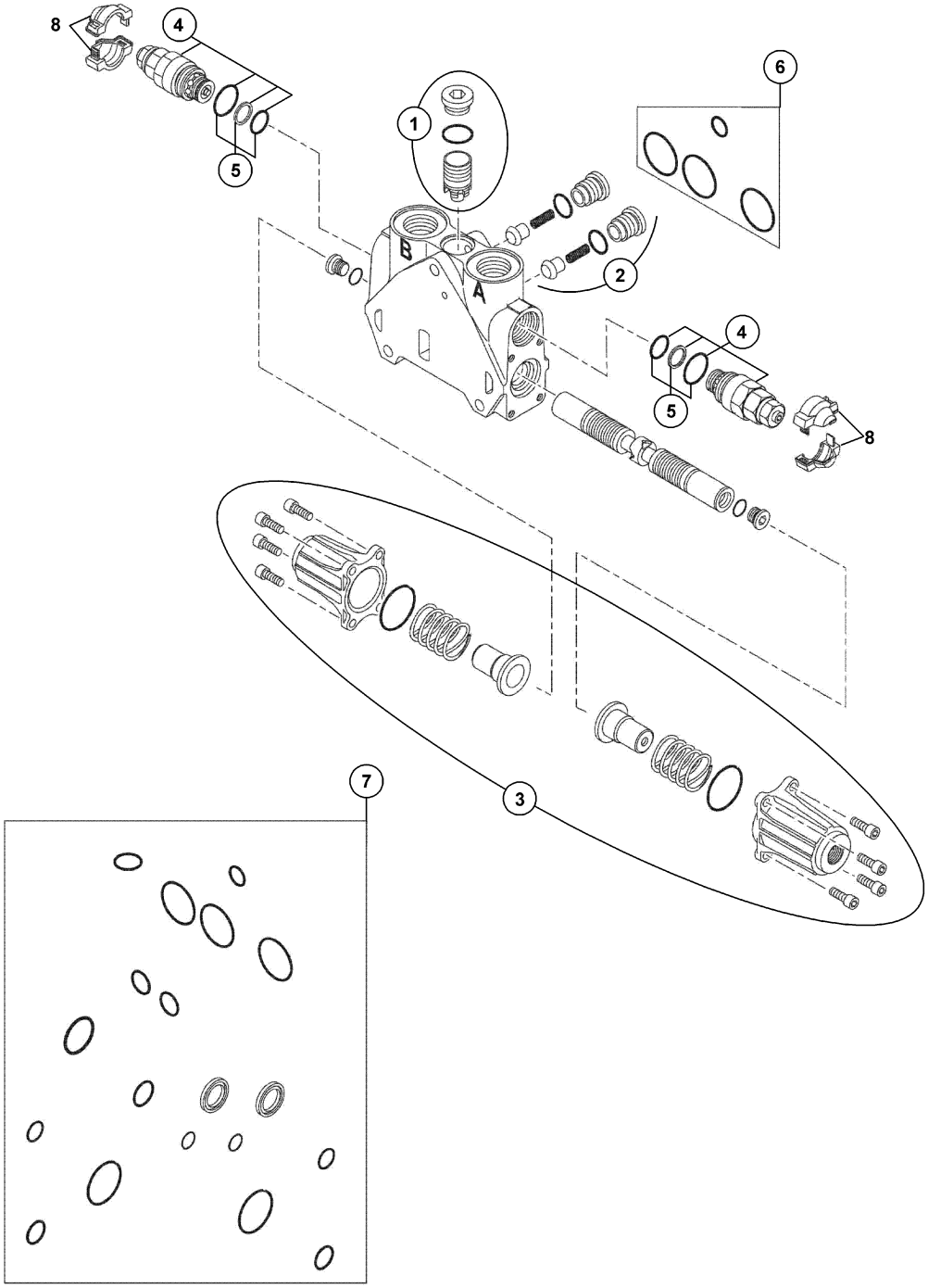

KAZICI KUMANDA VALFİ, LEVYELİ (PİSTONLU POMPA &TİP B, FS)
BACKHOE CONTROL VALVE, LEVERS (PISTON PUMP & TYPE B, FS)

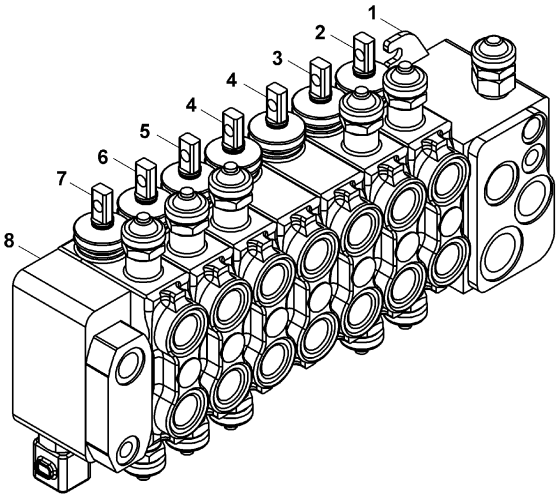

KAZICI KUMANDA VALFİ- GİRİŞ BLOĞU (TİP B)
BACKHOE CONTROL VALVE-INLET BLOCK (TYPE B)

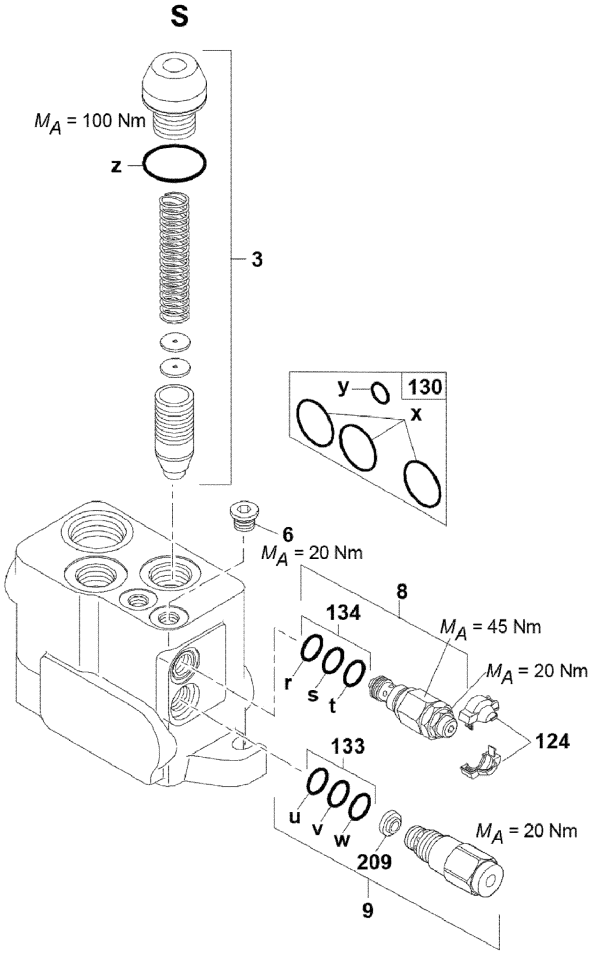

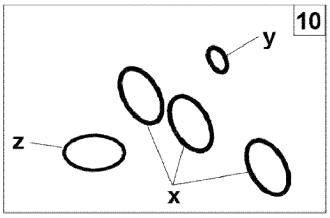

KAZICI KUMANDA VALF ARM KONTROL BLOKLARI,LEVYE (TİP B)
BACKHOE CONTROL VALVE ARM CONTROL BLOCKS,LEVERS (TYPE B)

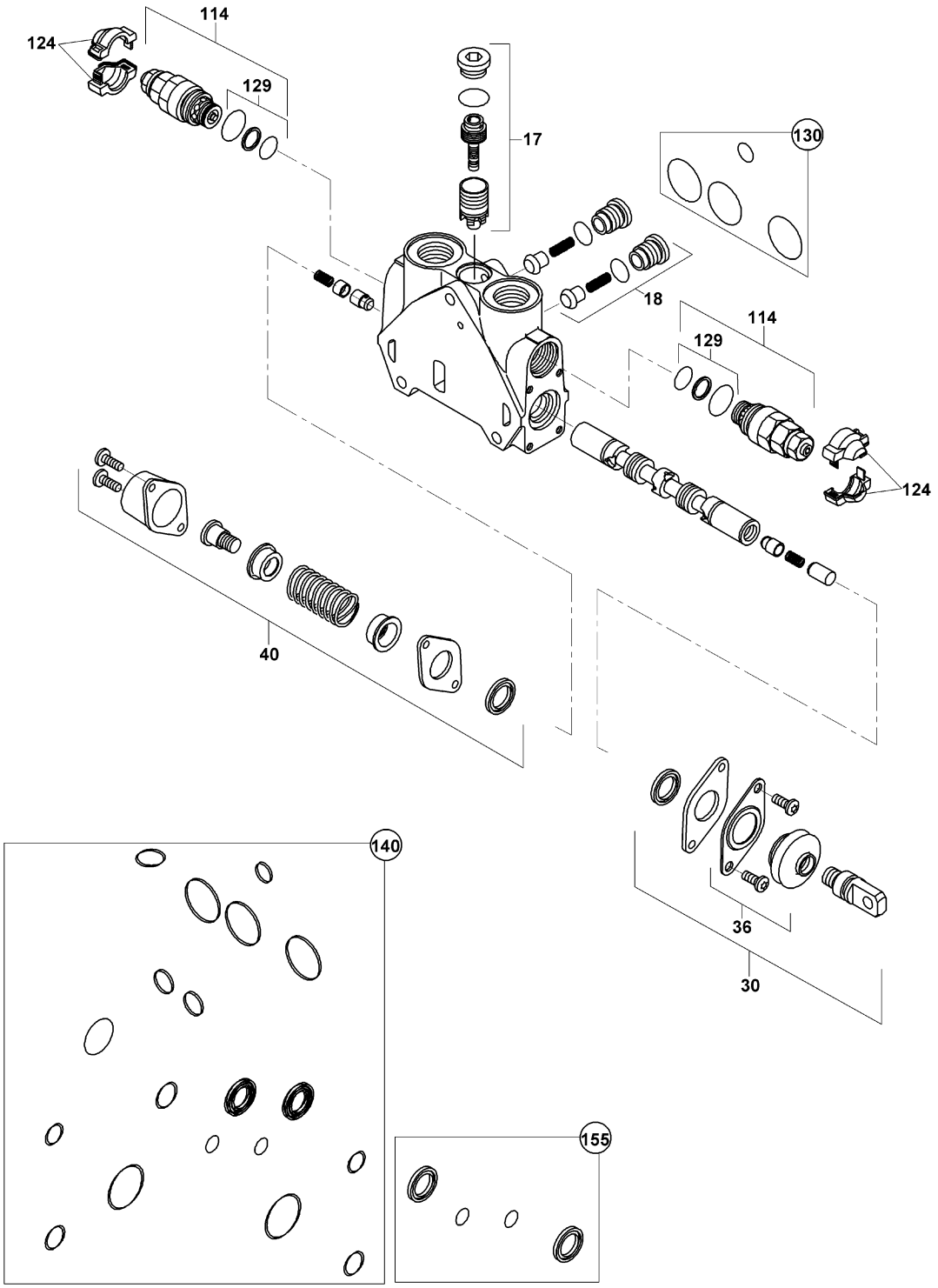

KAZICI KUMANDA VALFİ- DÖNÜŞ SİLİNDİRİ KONTROL BLOĞU, LEVYE (TİP B)
BACKHOE CONTROL VALVE-SLEW SWING RAM CONTROL BLOCK LEVERS (TYPE B)

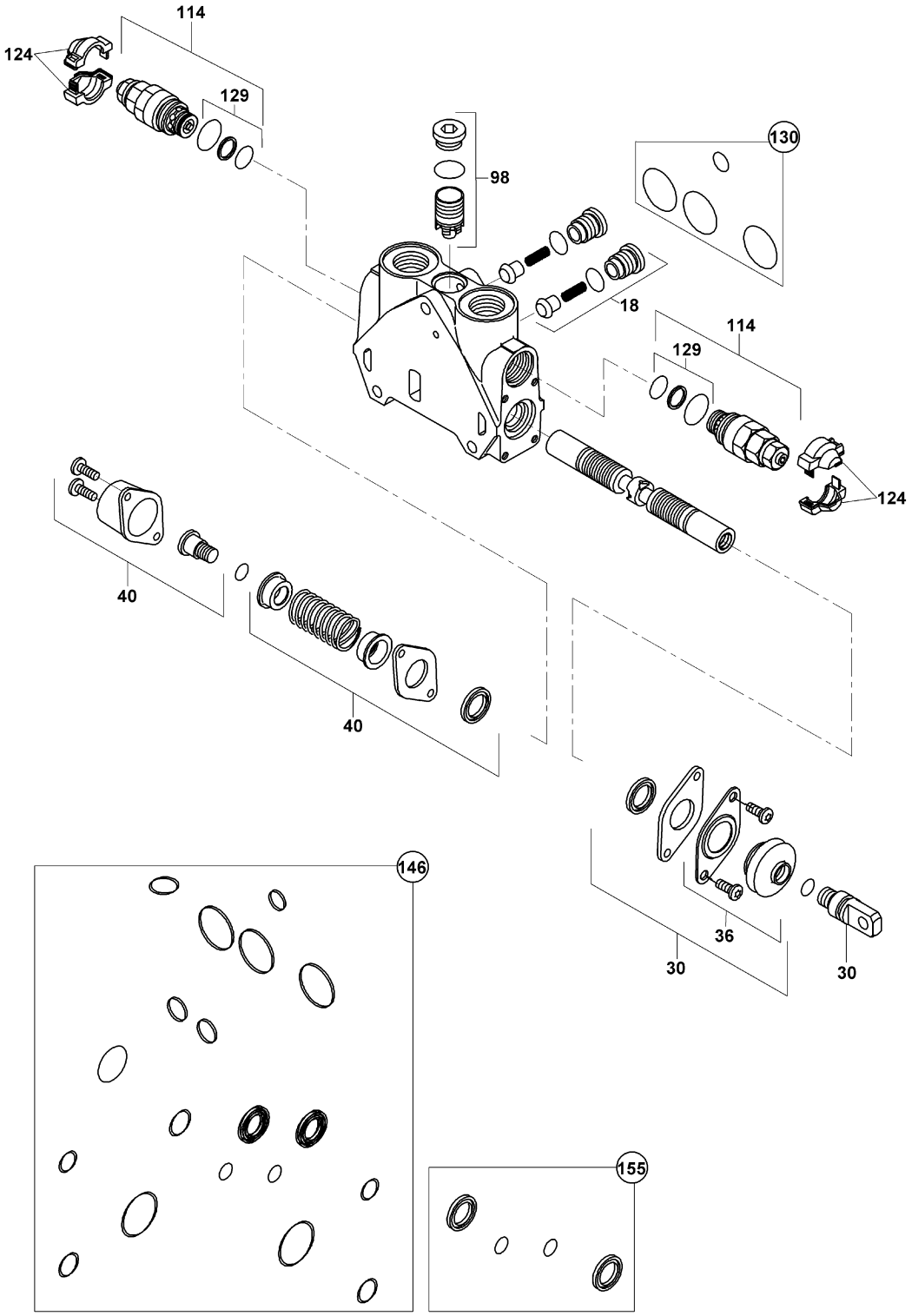

KAZICI KUMANDA VALFİ- AYAK SİLİNDİRİ KONTROL BLOĞU, LEVYE (TİP B)
BACKHOE CONTROL VALVE-STABILIZER RAM CONTROL BLOCK, LEVERS (TYPE B)

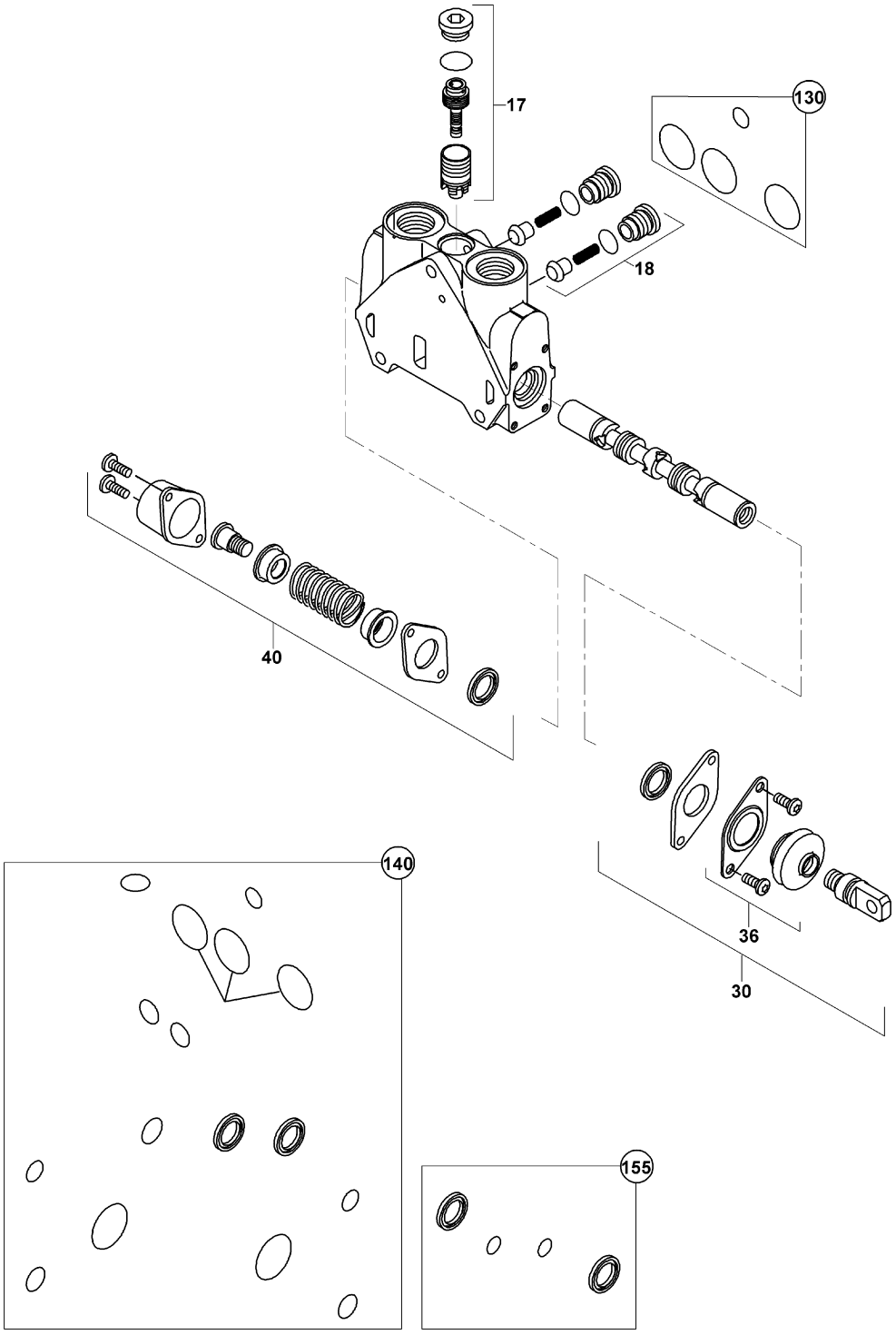

KAZICI KUMANDA VALFİ- KIVIRICI SİLİNDİR KONTROL BLOĞU, LEVYE (TİP B)
BACKHOE CONTROL VALVE BUCKET RAM CONTROL BLOCK, LEVERS (TYPE B)

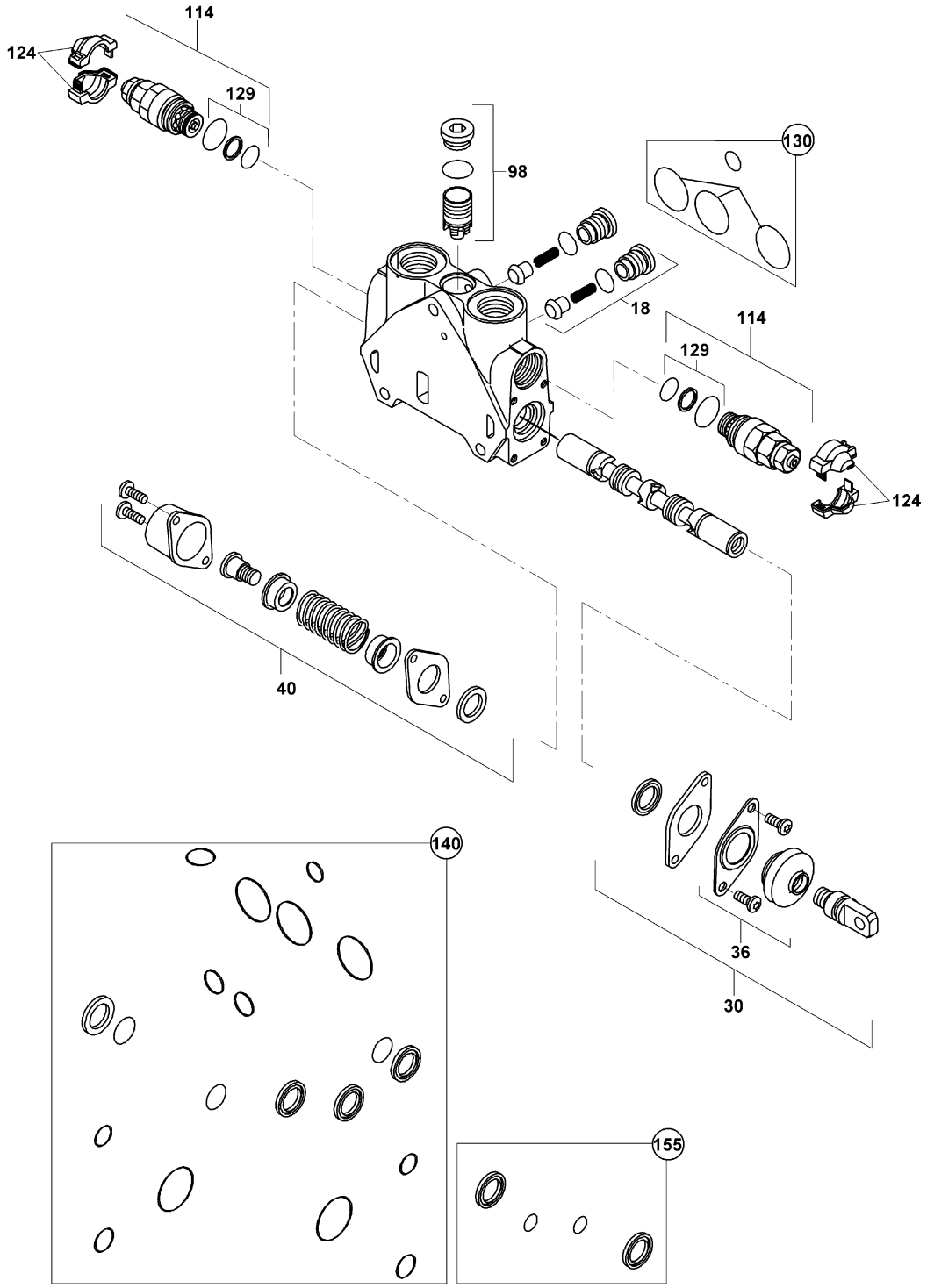

KAZICI KUMANDA VALFİ BOM KONTROL BLOKLARI,LEVYE (TİP B)
BACKHOE CONTROL VALVE BOOM CONTROL BLOCKS,LEVERS (TYPE B)

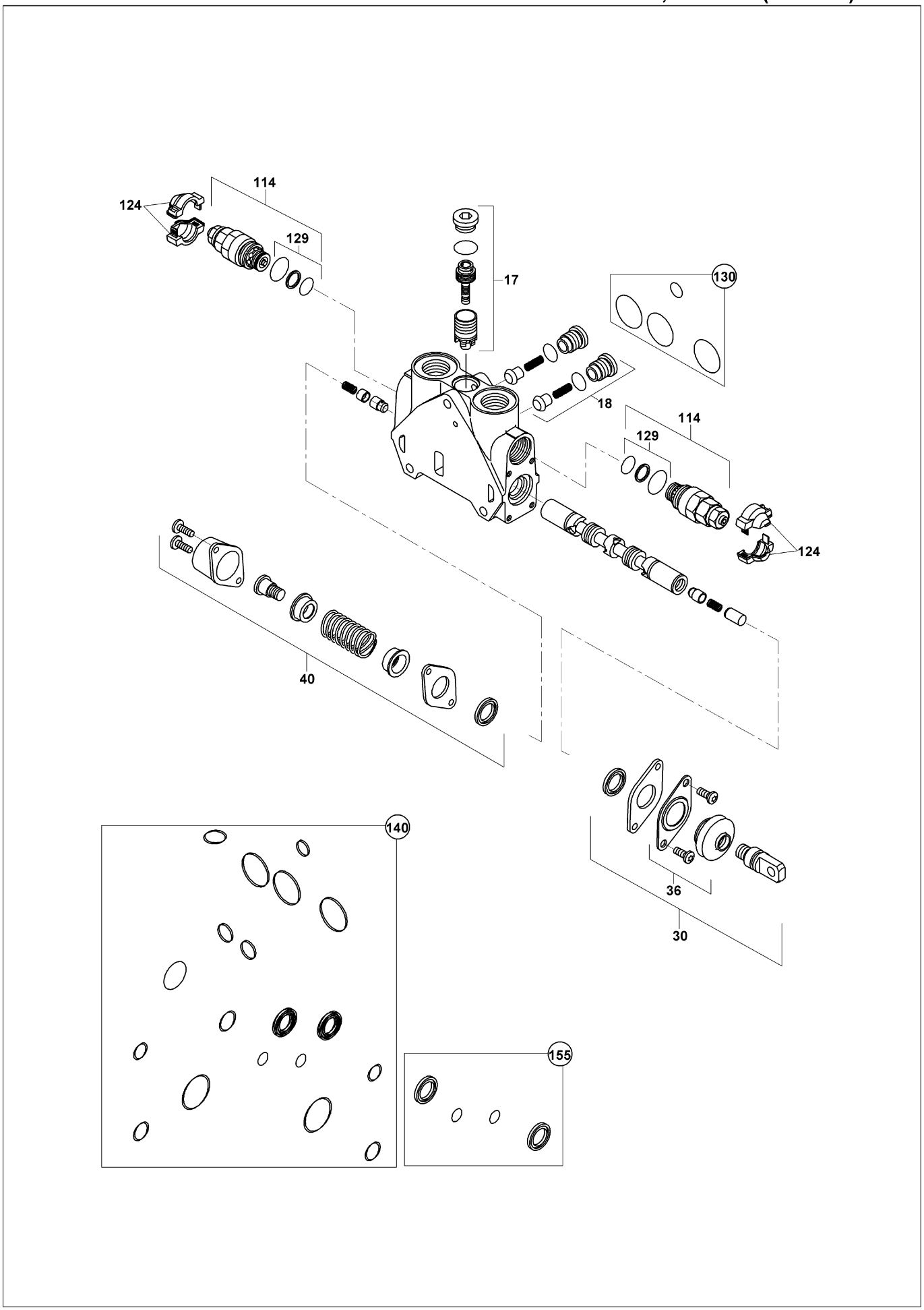

KAZICI KUMANDA VALFİ TELESKOPİK KONTROL BLOKLARI,LEVYE (TİP B)
BACKHOE CONTROL VALVE TELESCOPIC CONTROL BLOCKS,LEVERS (TYPE B)

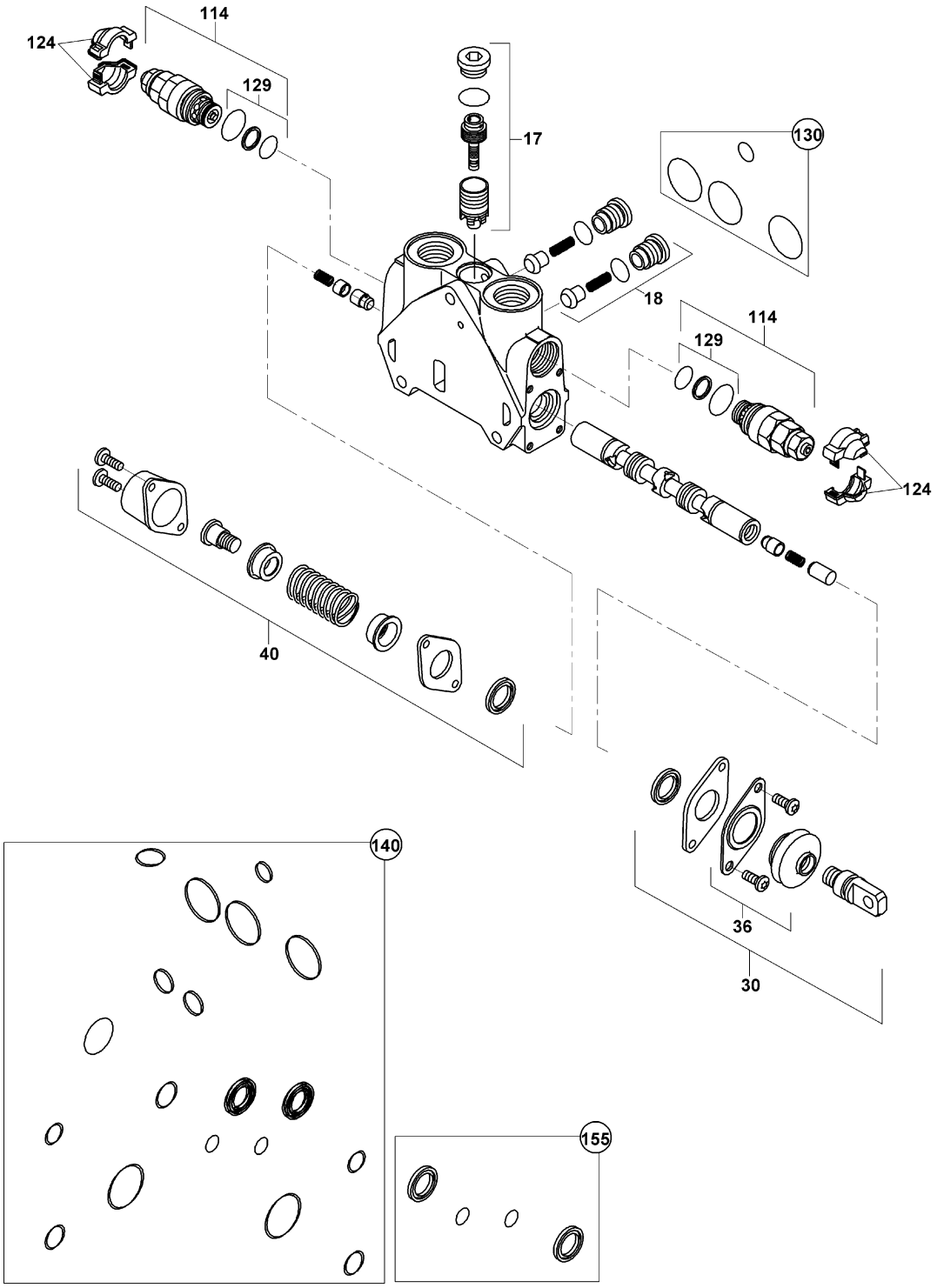

KAZICI KUMANDA VALFİ- ÇIKIŞ BLOĞU (TİP B)
BACKHOE CONTROL VALVE -OUTLET BLOCK (TYPE B)

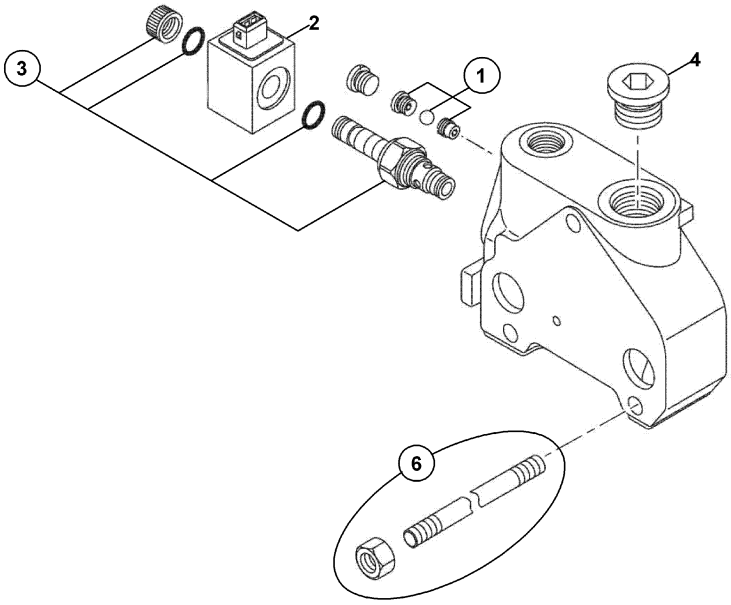

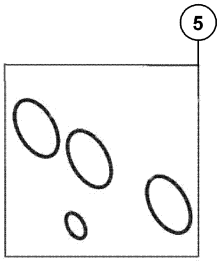

İLAVE ATAŞMAN KUMANDA VALFİ
ADDITIONAL ATTACHMENT CONTROL VALVE

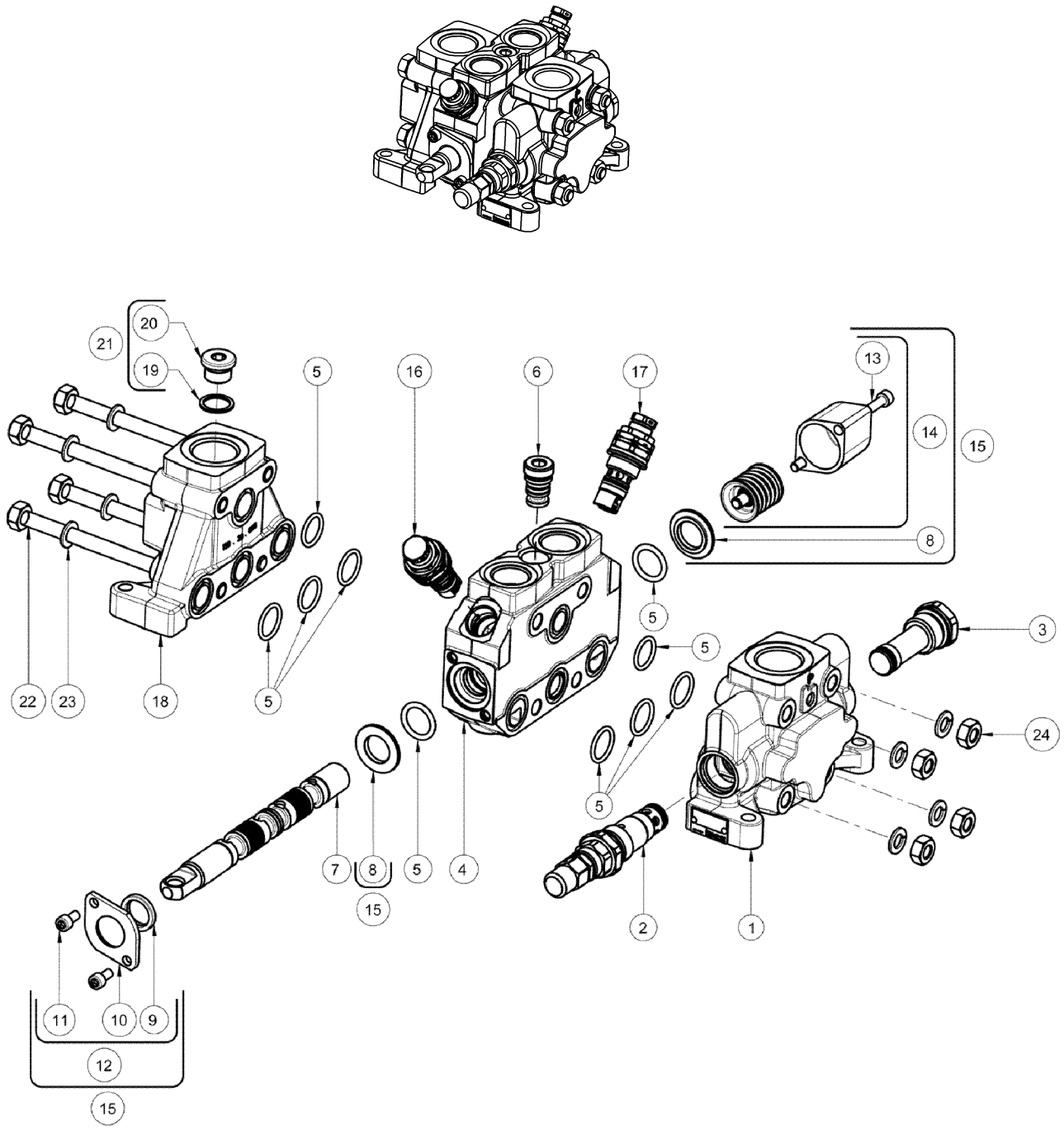

JOYSTİCK KUMANDA, SAĞ
REMOTE CONTROL VALVE, RH

12, 15, 17, 19, 21, 22, ve 23' ÜN SÖKÜLMESİ DURUMUNDA BU PARÇALARIN ORJİNAL MONTAJ SIRASINDA OLDUĞUNDAN VE ORJİNAL SÜRGÜ HİZASINDA MONTAJLANDIĞINDAN EMİN OLUNUZ.

IF REMOVING ITEM NUMBERS 12, 15, 17, 19, 21, 22, AND 23 ENSURE THAT THESE ARE KEPT IN ORJINAL ASSEMBLY ORDER ARE ASSEMBLED TO THE ORJINAL SPOOL BORE.

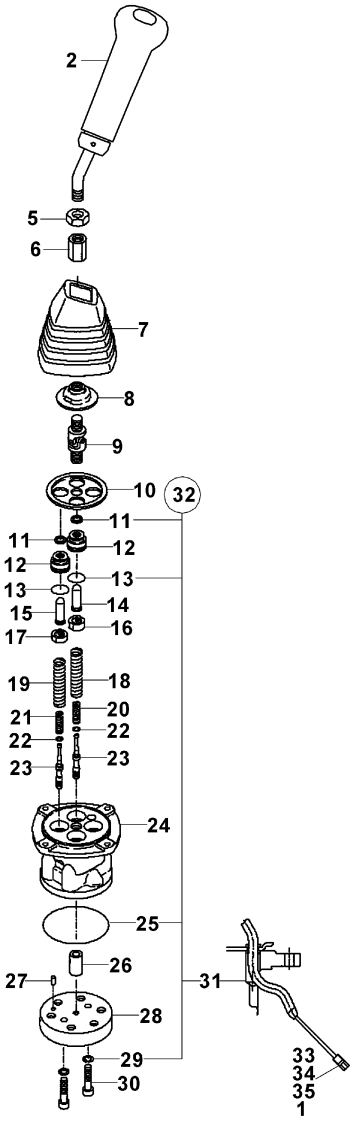

JOYSTİCK KUMANDA, SOL
REMOTE CONTROL VALVE, LEFT

12, 15, 17, 19, 21, 22, ve 23' ÜN SÖKÜLMESİ DURUMUNDA BU PARÇALARIN ORJİNAL MONTAJ SIRASINDA OLDUĞUNDAN VE ORJİNAL SÜRGÜ HİZASINDA MONTAJLANDIĞINDAN EMİN OLUNUZ.

IF REMOVING ITEM NUMBERS 12, 15, 17, 19, 21, 22, AND 23 ENSURE THAT THESE ARE KEPT IN ORJINAL ASSEMBLY ORDER ARE ASSEMBLED TO THE ORJINAL SPOOL BORE.

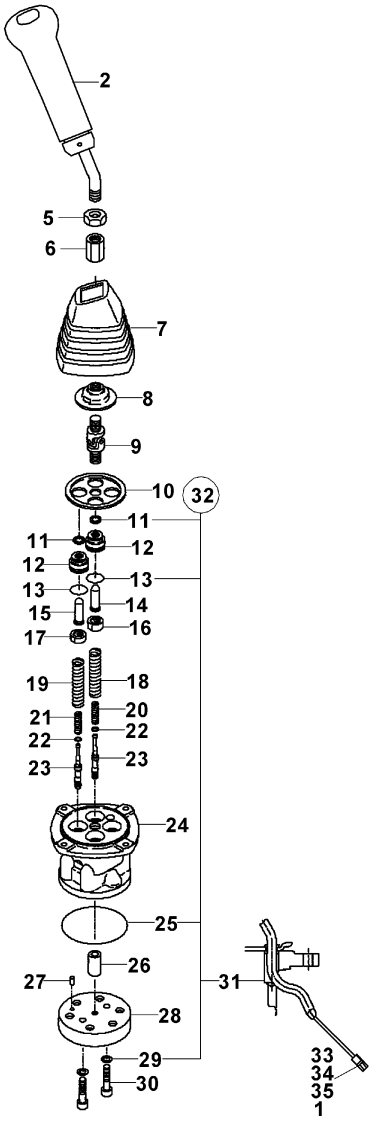

KALDIRICI SİLİNDİR, YÜKLEYİCİ, SAĞ
LIFT CYLINDER, LOADER, RH

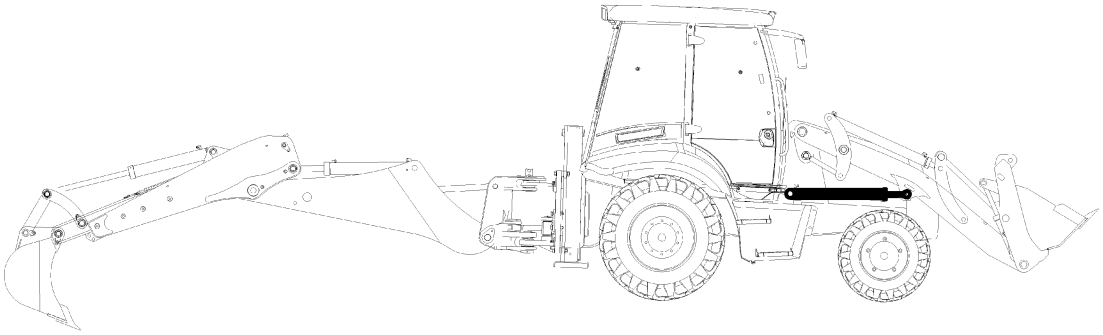

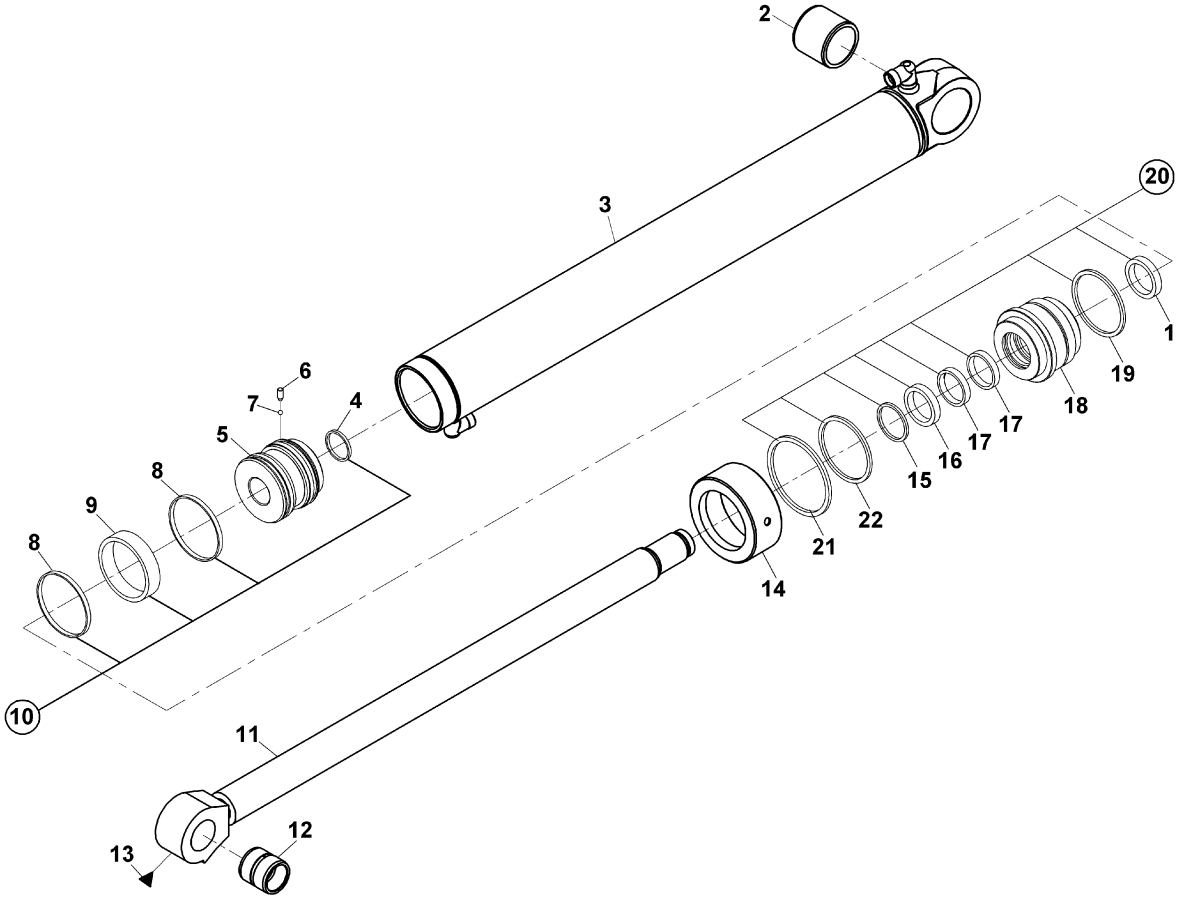

KEPÇE SİLİNDİRİ, YÜKLEYİCİ, SAĞ
BUCKET CYLINDER, LOADER, RH

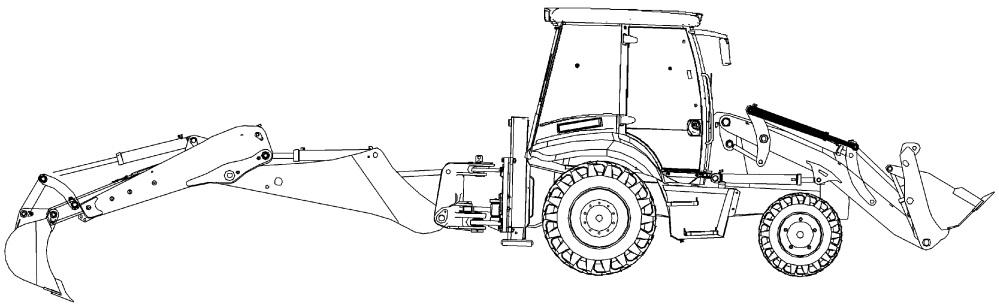

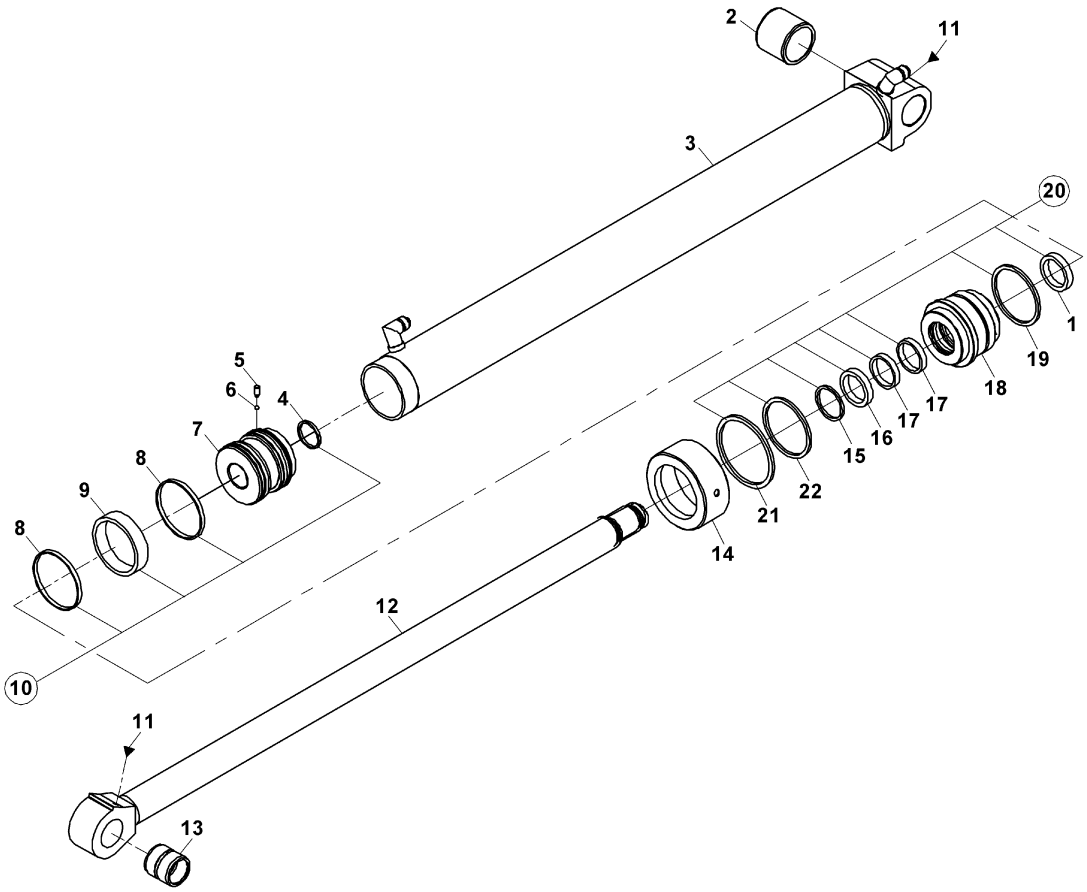

KEPÇE SİLİNDİRİ, YÜKLEYİCİ, SOL
BUCKET CYLINDER, LOADER, LH

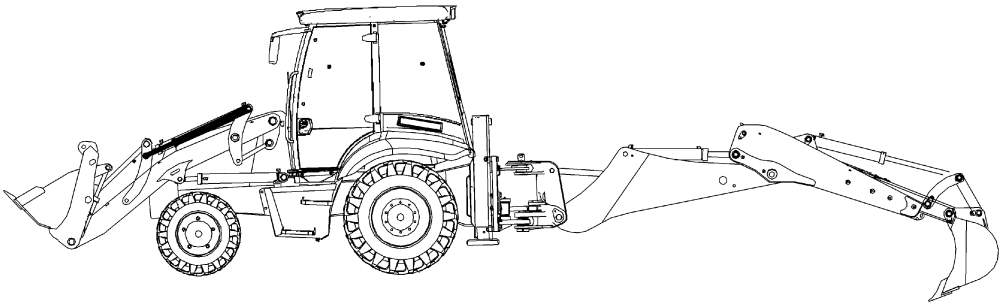

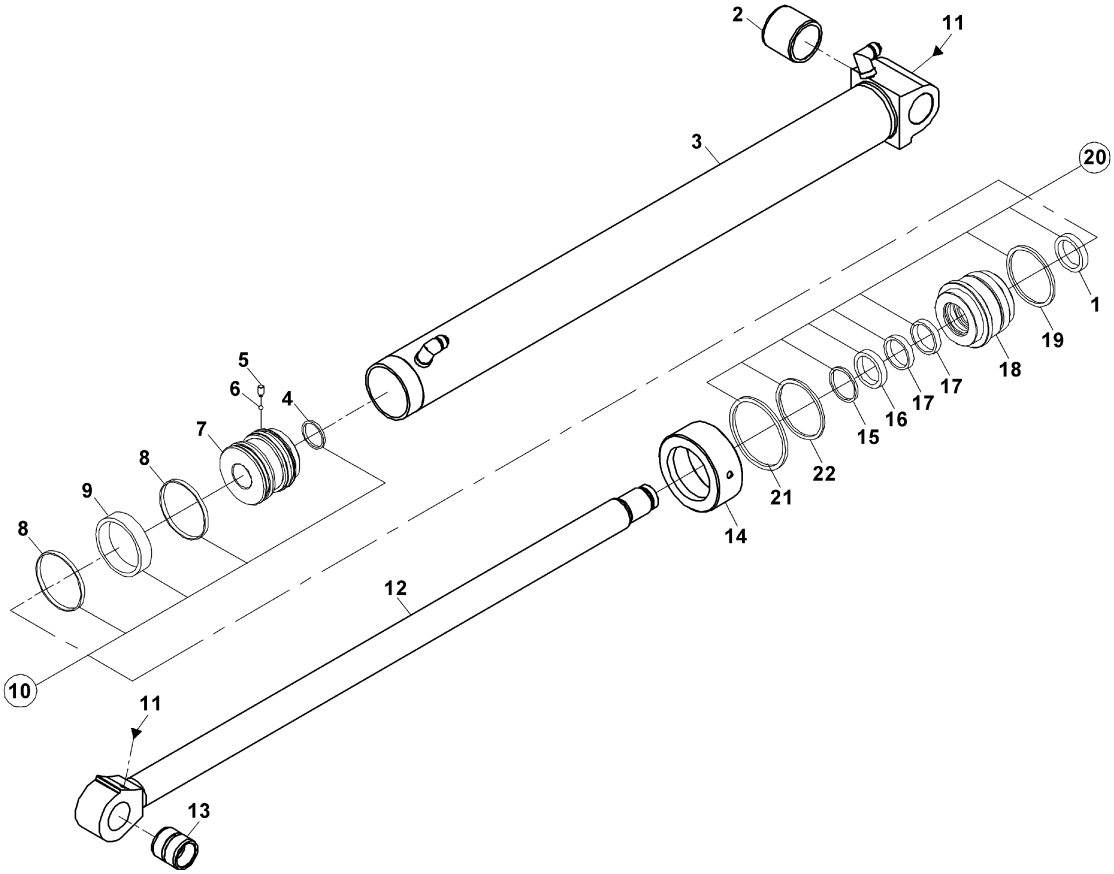

AÇILIR KEPÇE SİLİNDİRİ
MULTIPURPOSE BUCKET CYLINDER

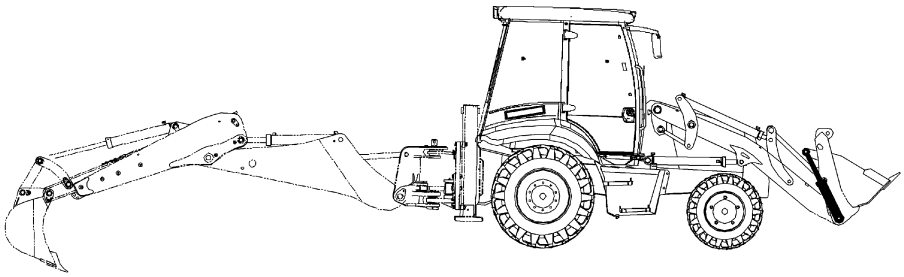

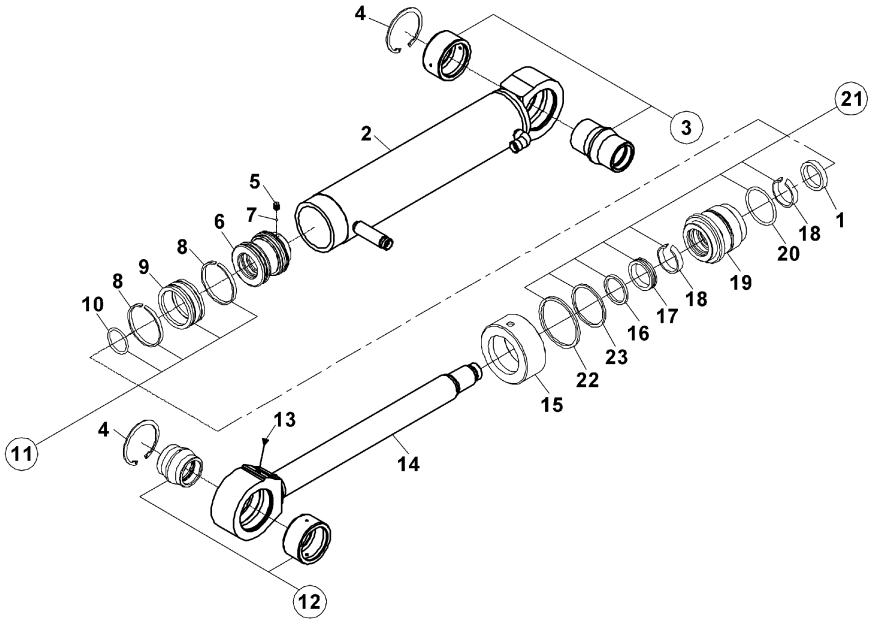

AYAK SİLİNDİRİ, SAĞ
STABILIZER CYLINDER, RH

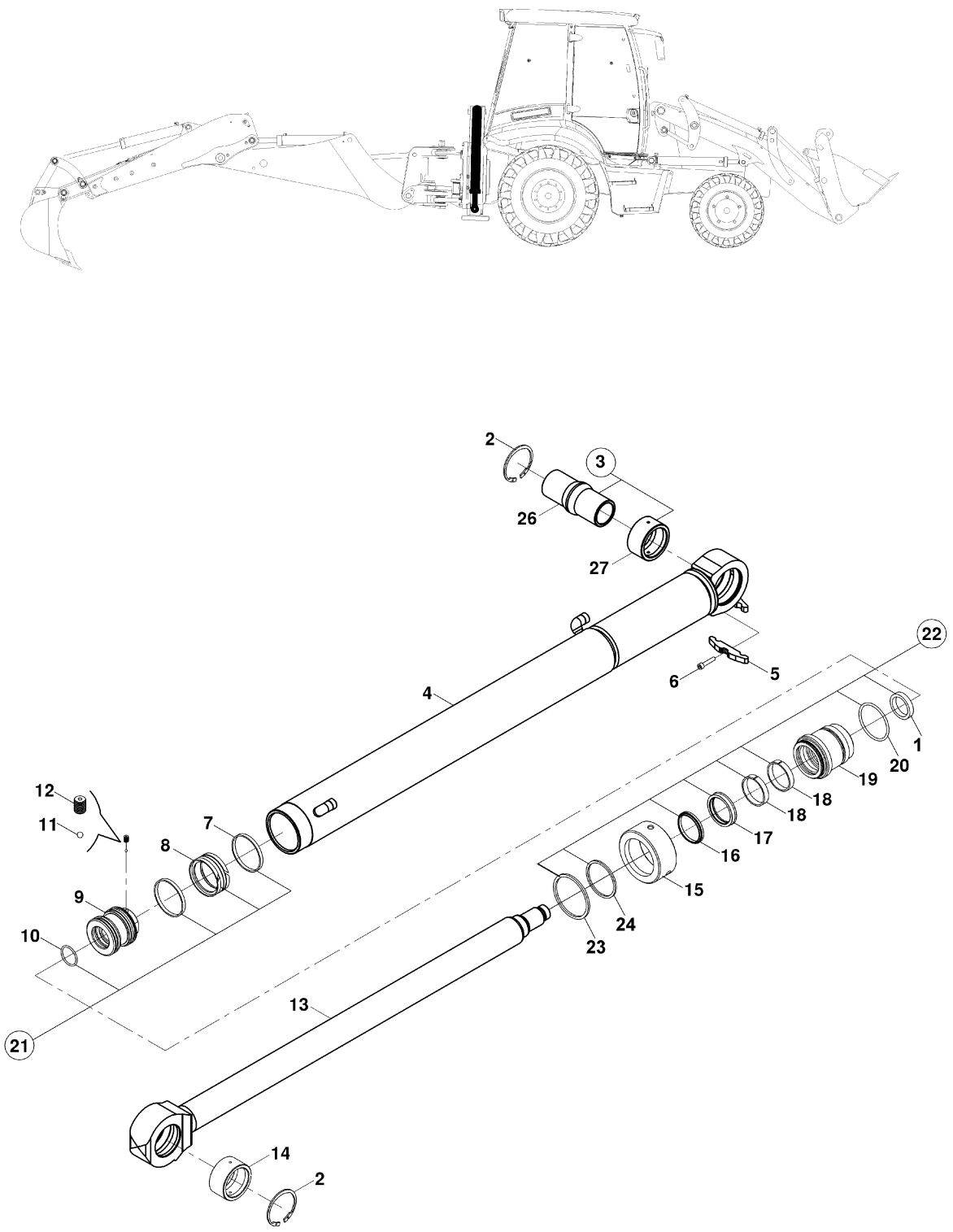

AYAK SİLİNDİRİ, SOL
STABILIZER CYLINDER, LH

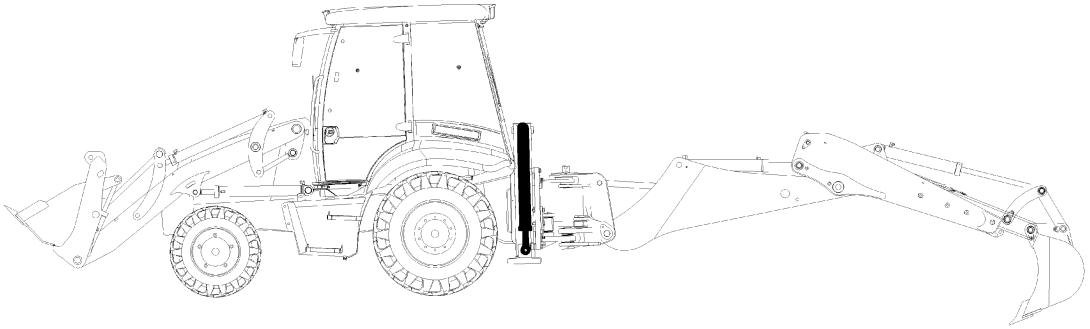

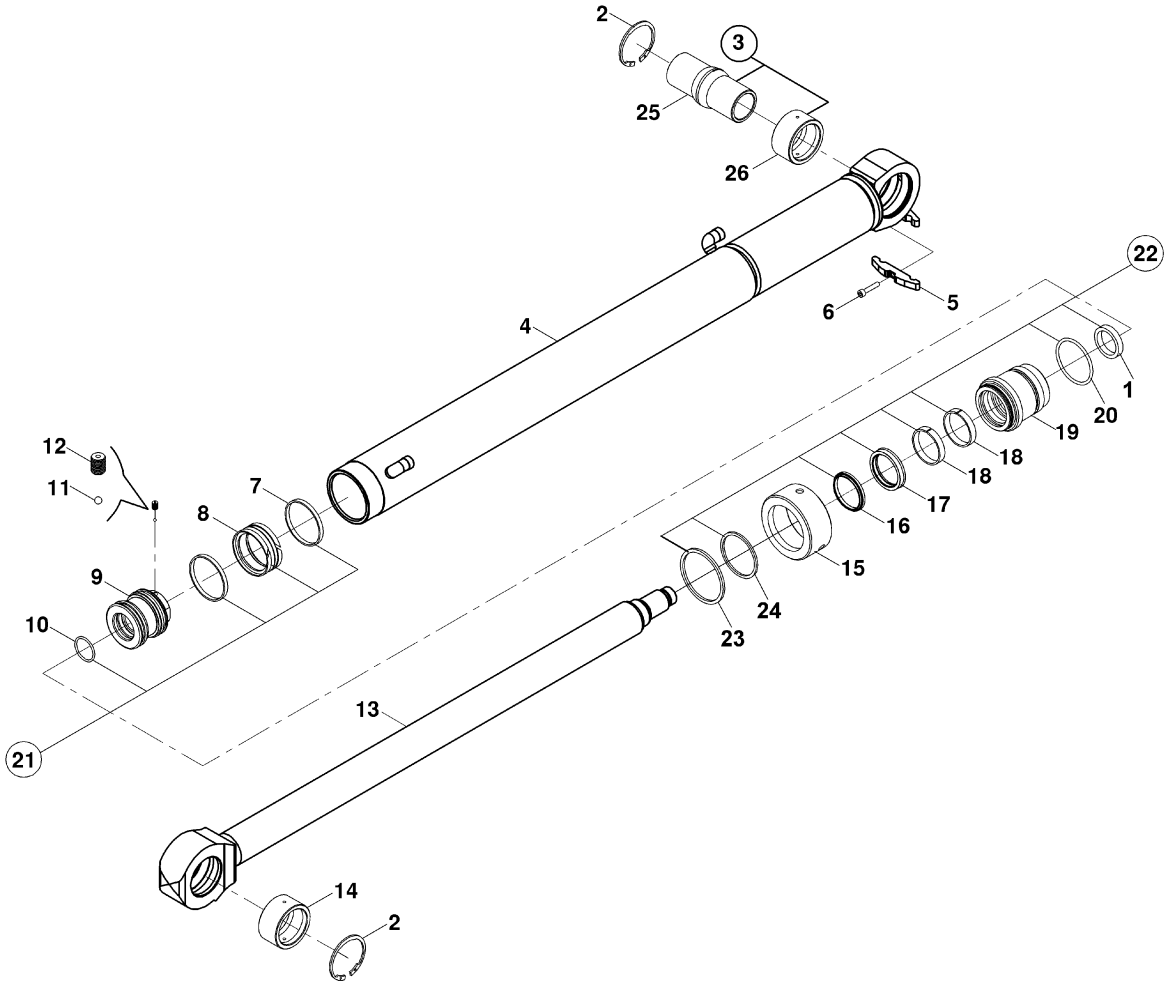

DÖNÜŞ SİLİNDİRİ
SWING CYLINDER

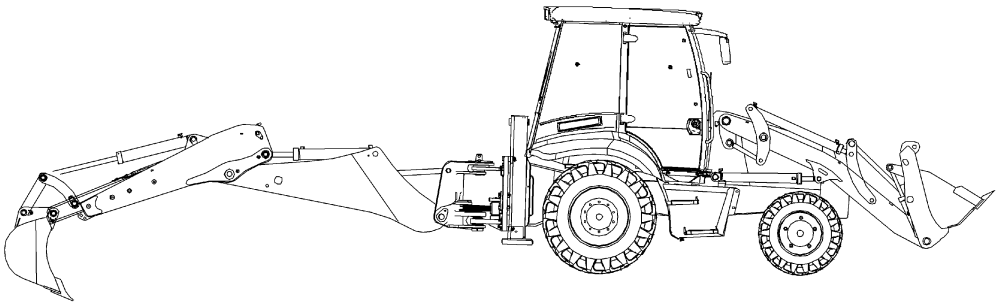

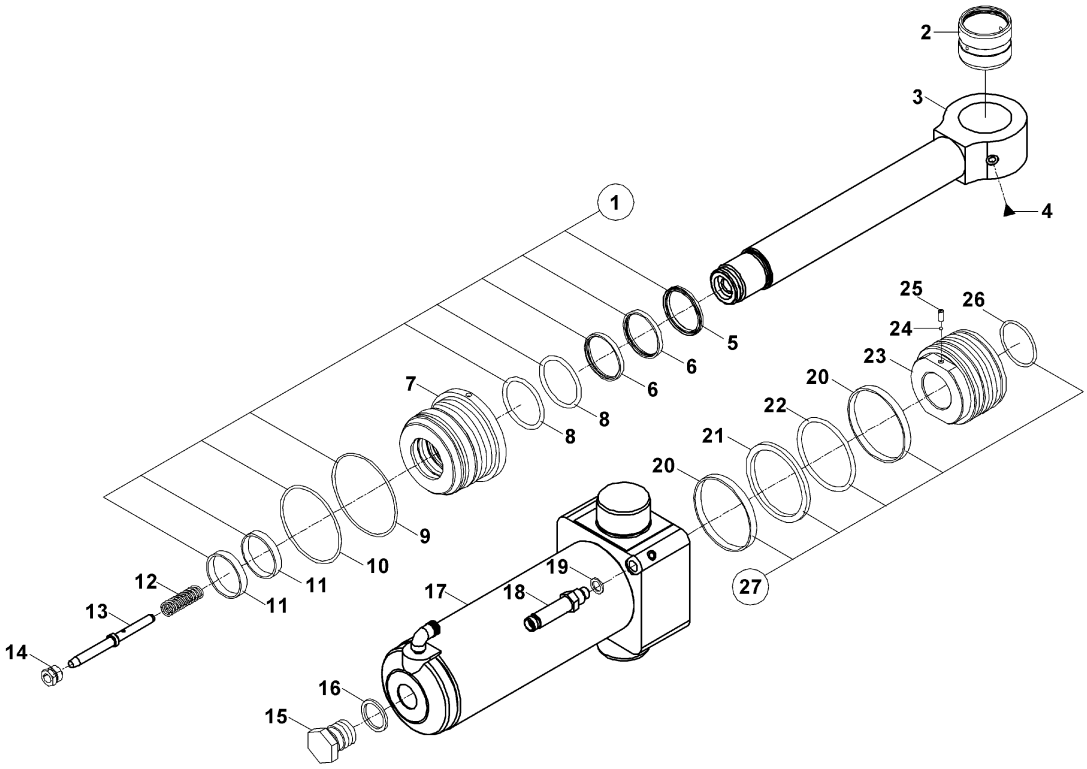

BOM SİLİNDİRİ, KAZICI
BOOM CYLINDER, BACKHOE

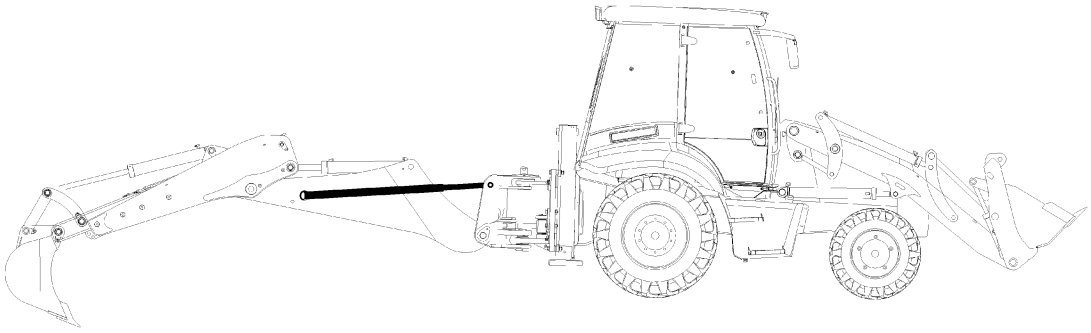

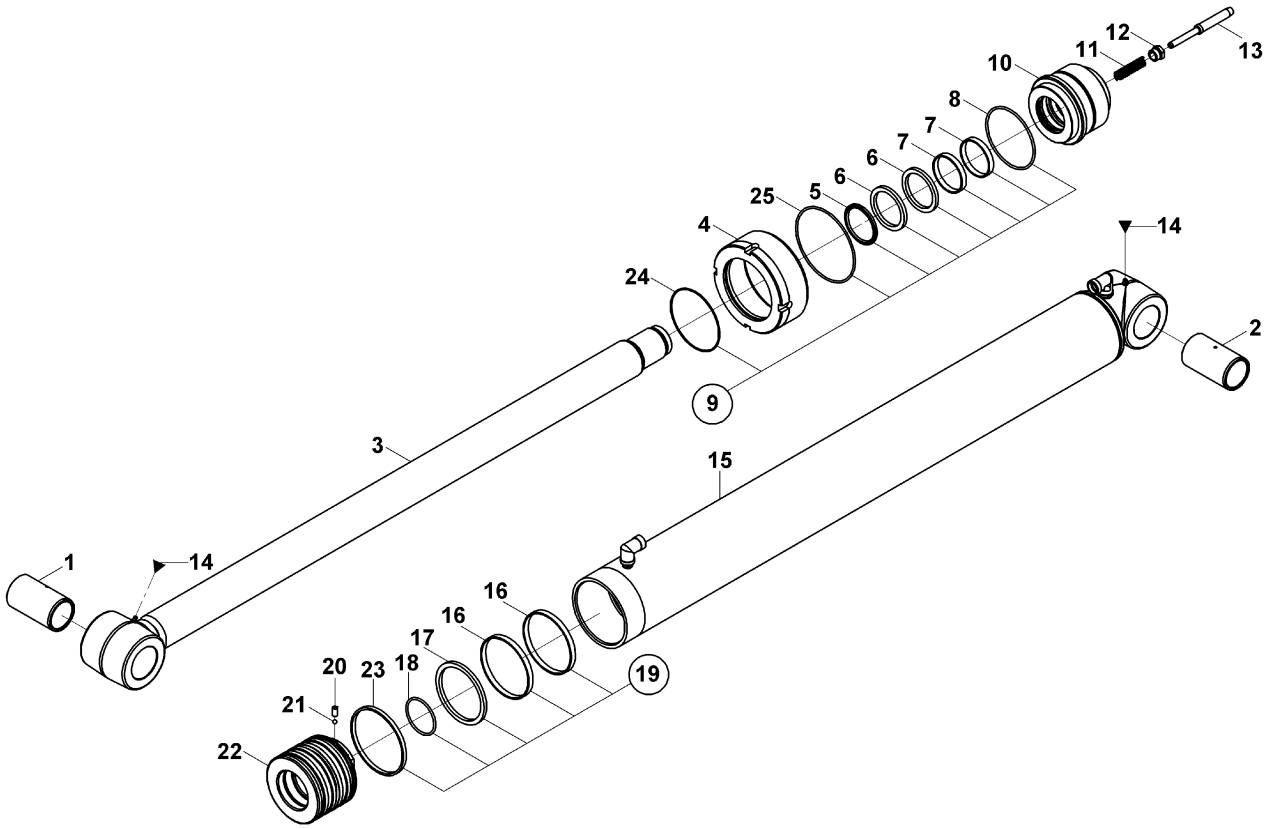

ARM SİLİNDİRİ, KAZICI
ARM CYLINDER, BACKHOE

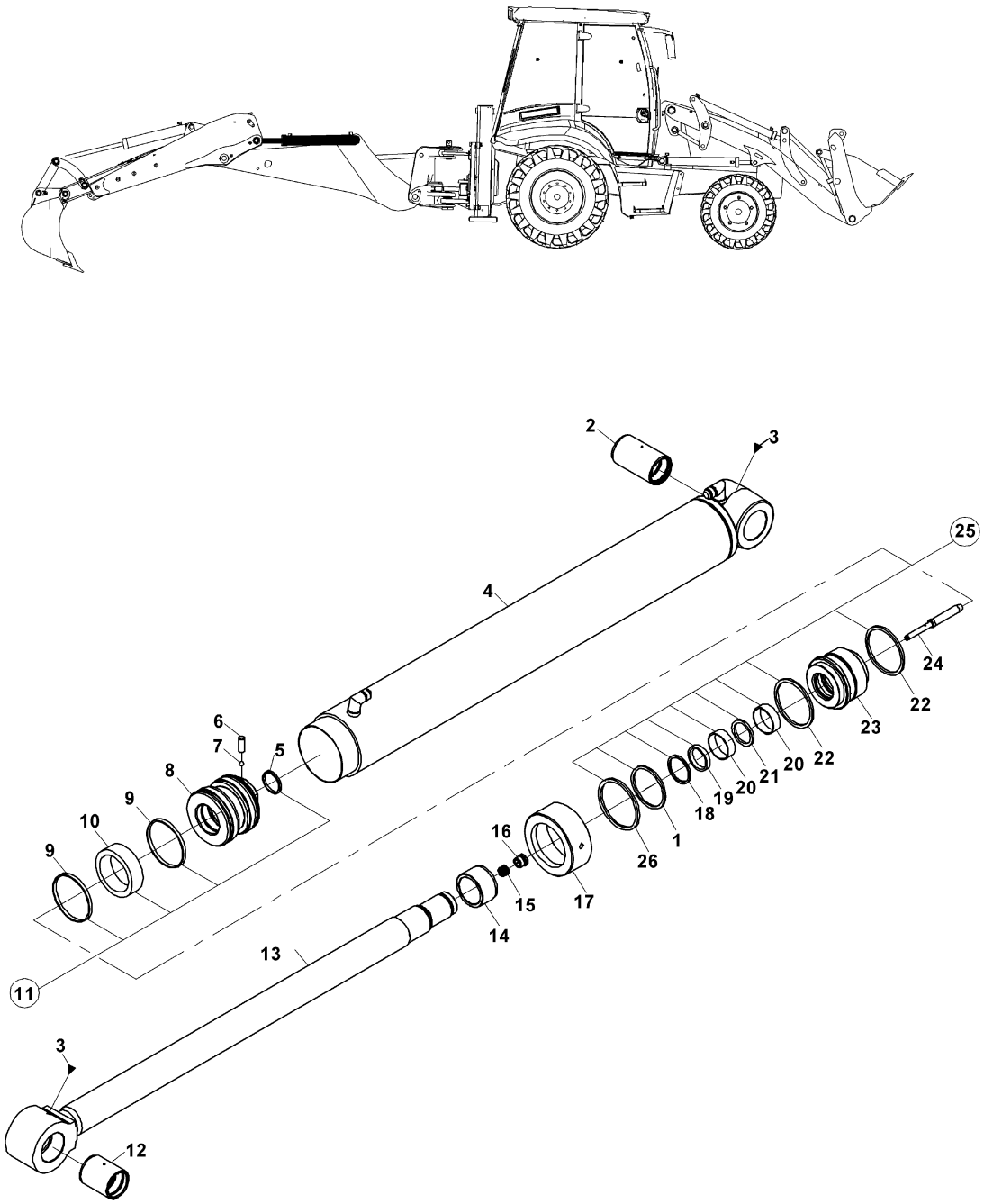

ARM SİLİNDİRİ, KAZICI
ARM CYLINDER, BACKHOE

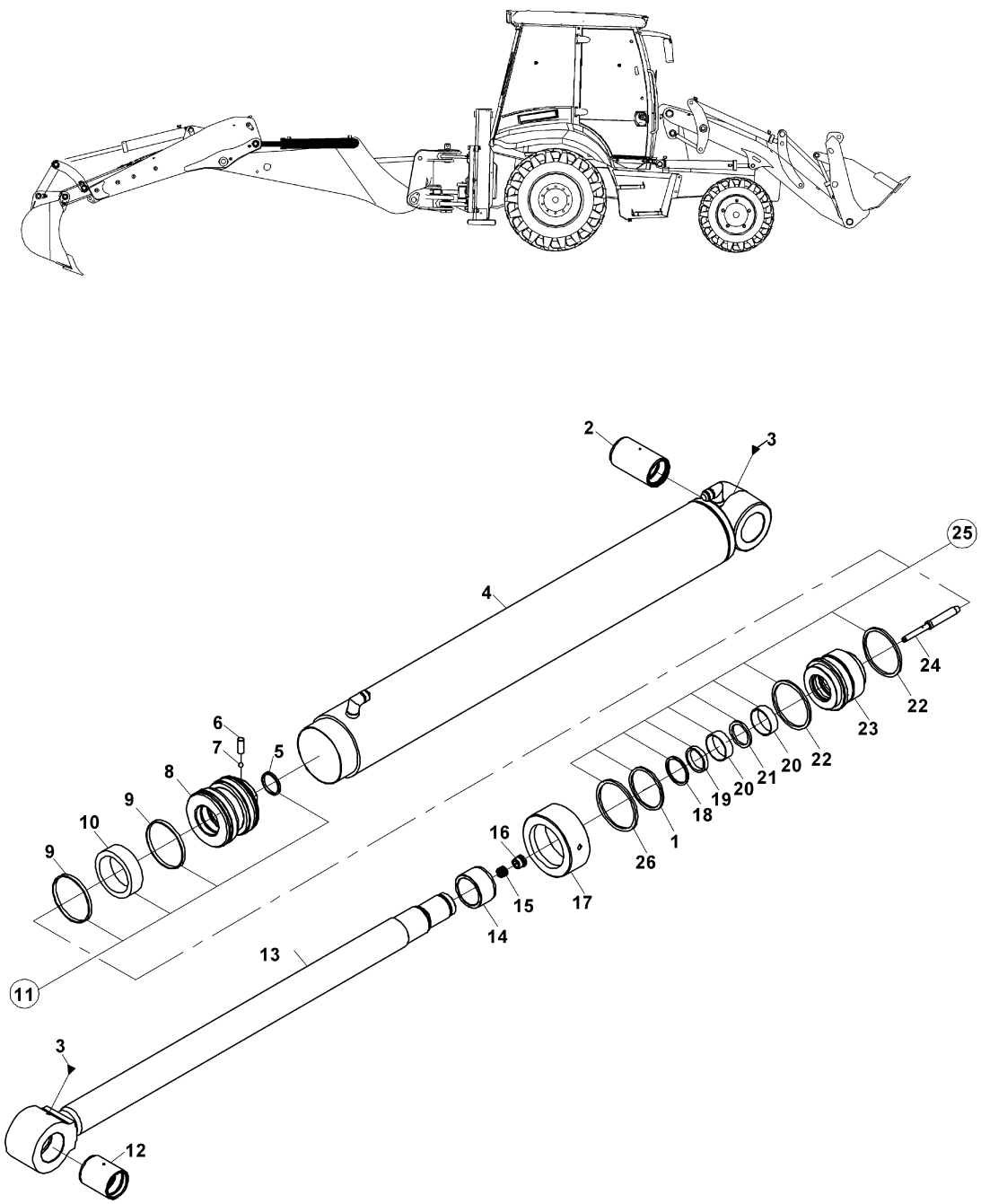

KEPÇE SİLİNDİRİ, KAZICI
BUCKET CYLINDER, BACKHOE

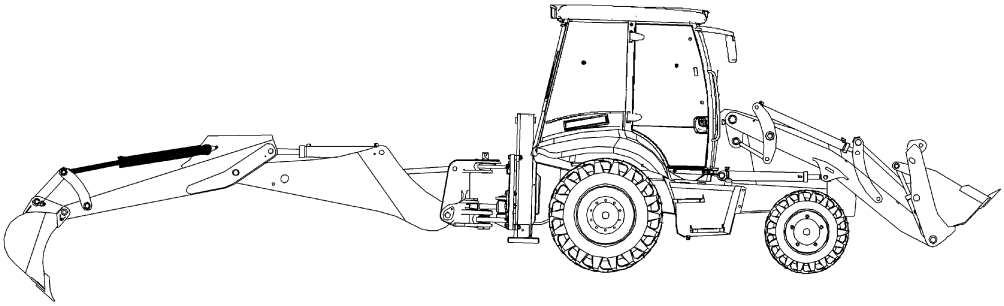

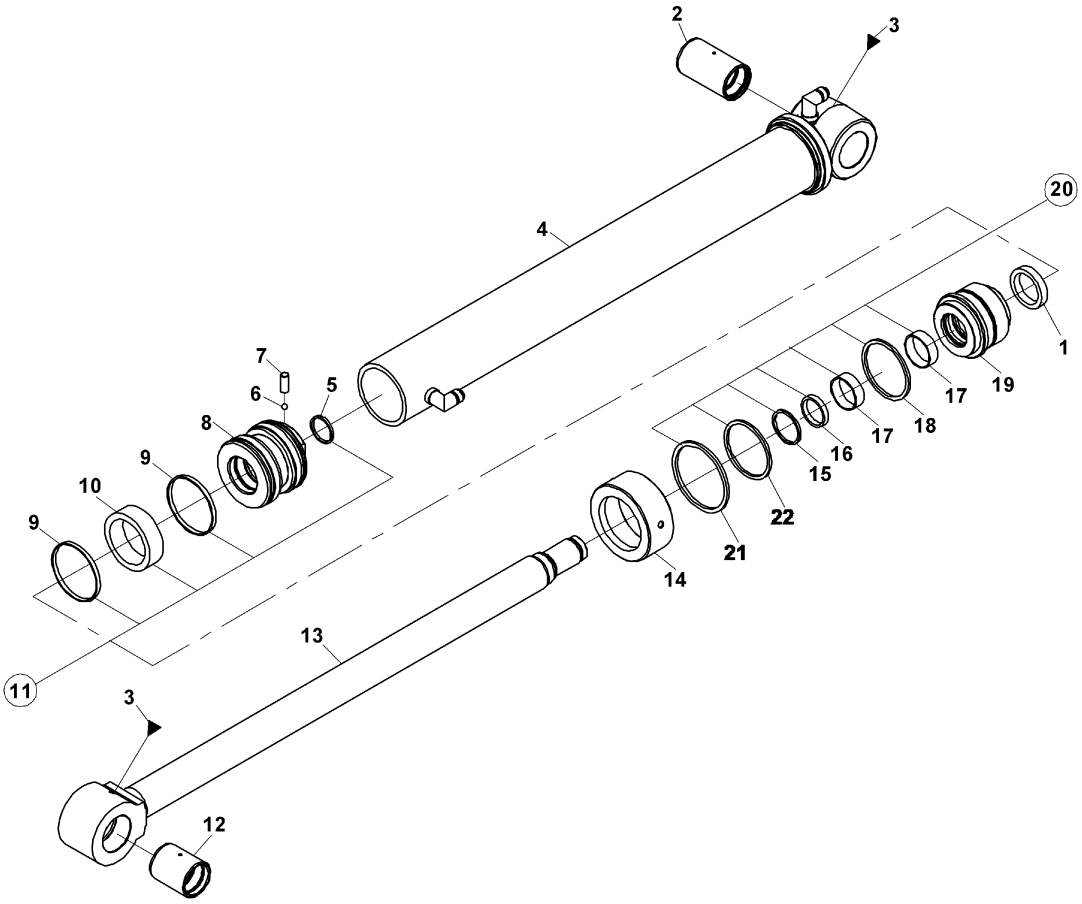

KEPÇE SİLİNDİRİ, KAZICI, TELESKOPİK
BUCKET CYLINDER, BACKHOE, TELESCOPIC

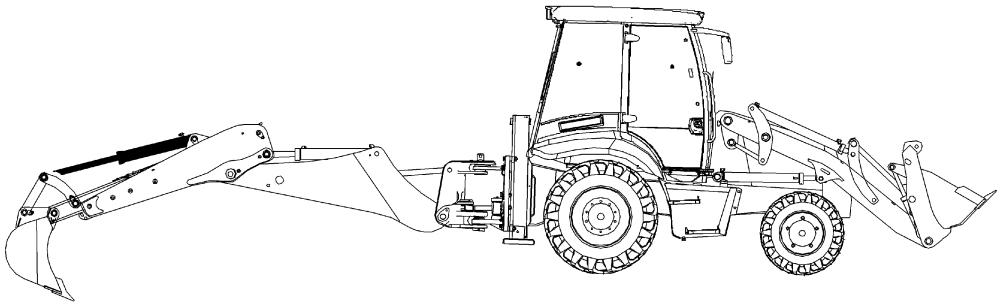

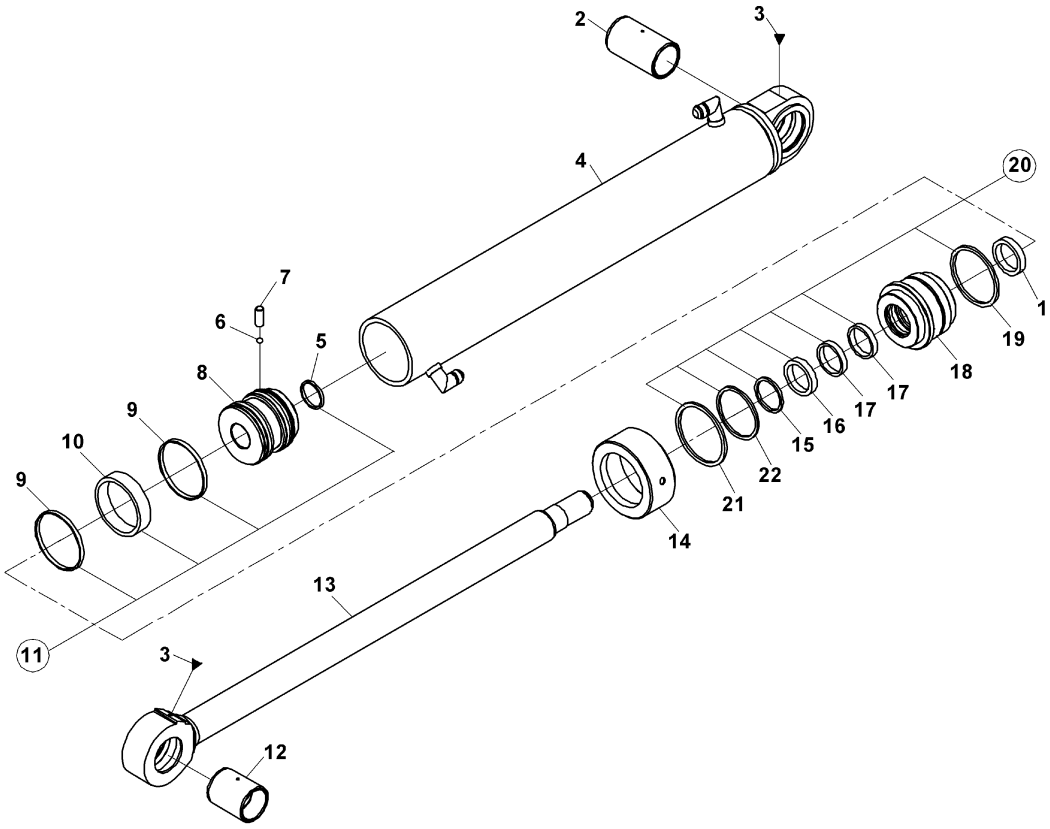

TELESKOPİK SİLİNDİR, KAZICI
TELESCOPIC CYLINDER, BACKHOE

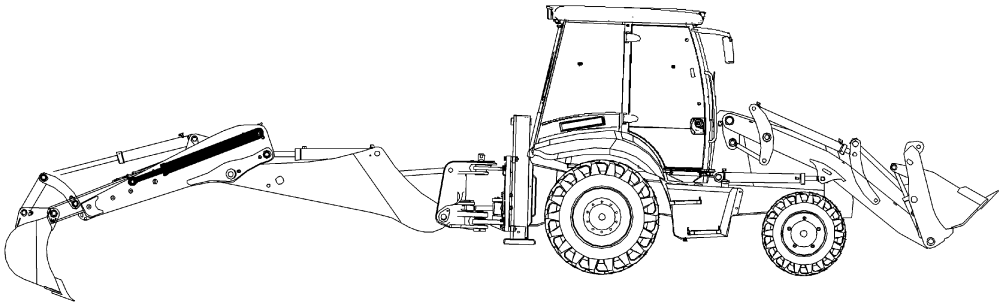

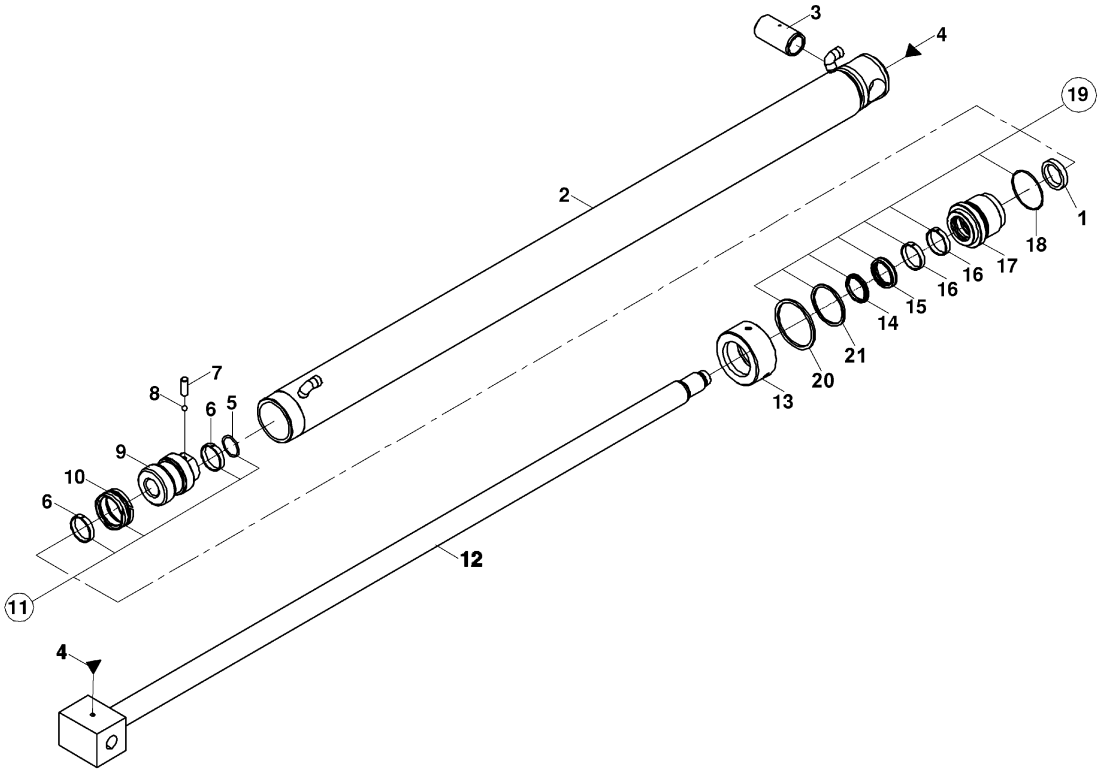

ÇABUK SÖK-TAK SİLİNDİRİ, YÜKLEYİCİ
QUICK COUPLER CYLINDER, LOADER

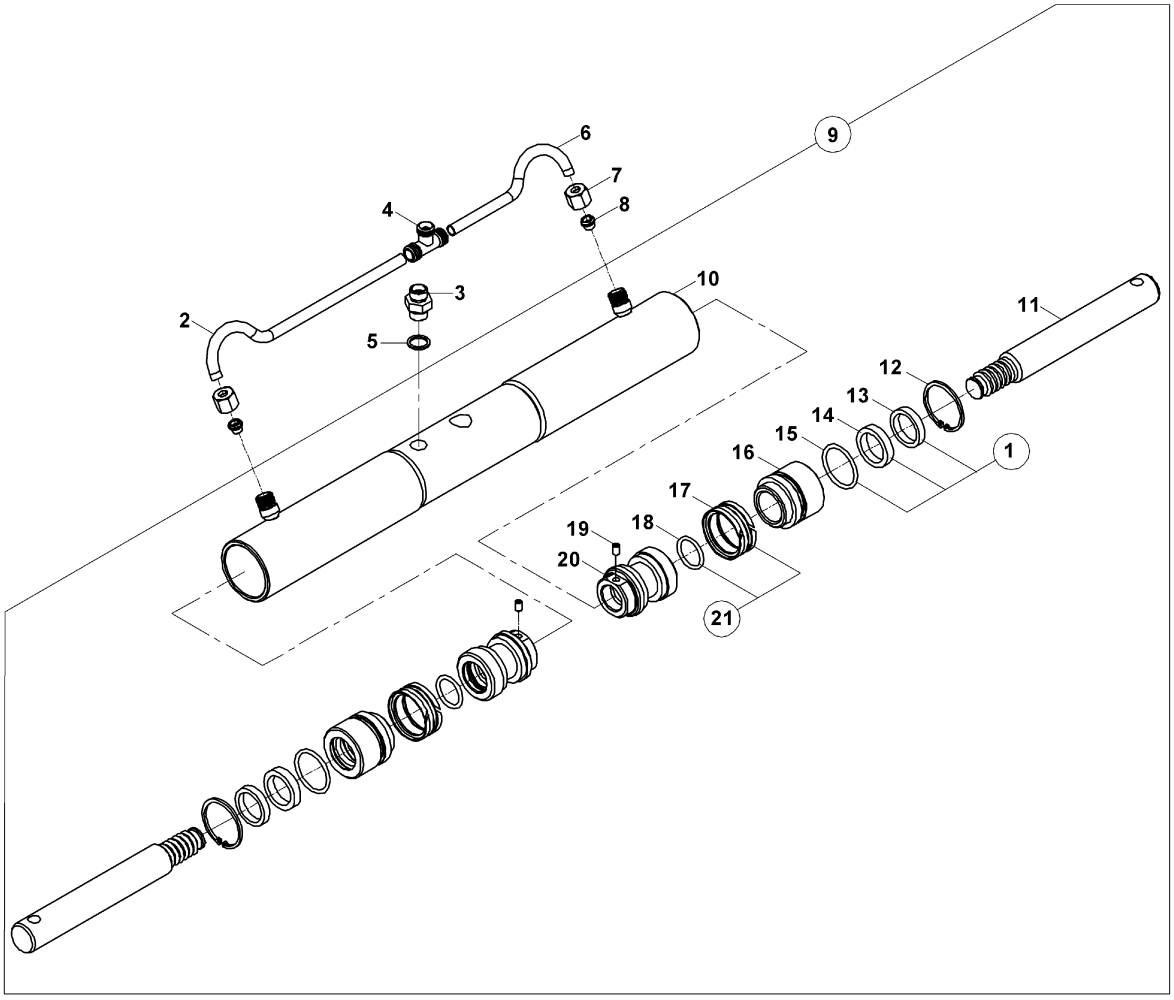

TESVİYE KÜREĞİ SİLİNDİRİ
LEVELLING BLADE CYLINDER

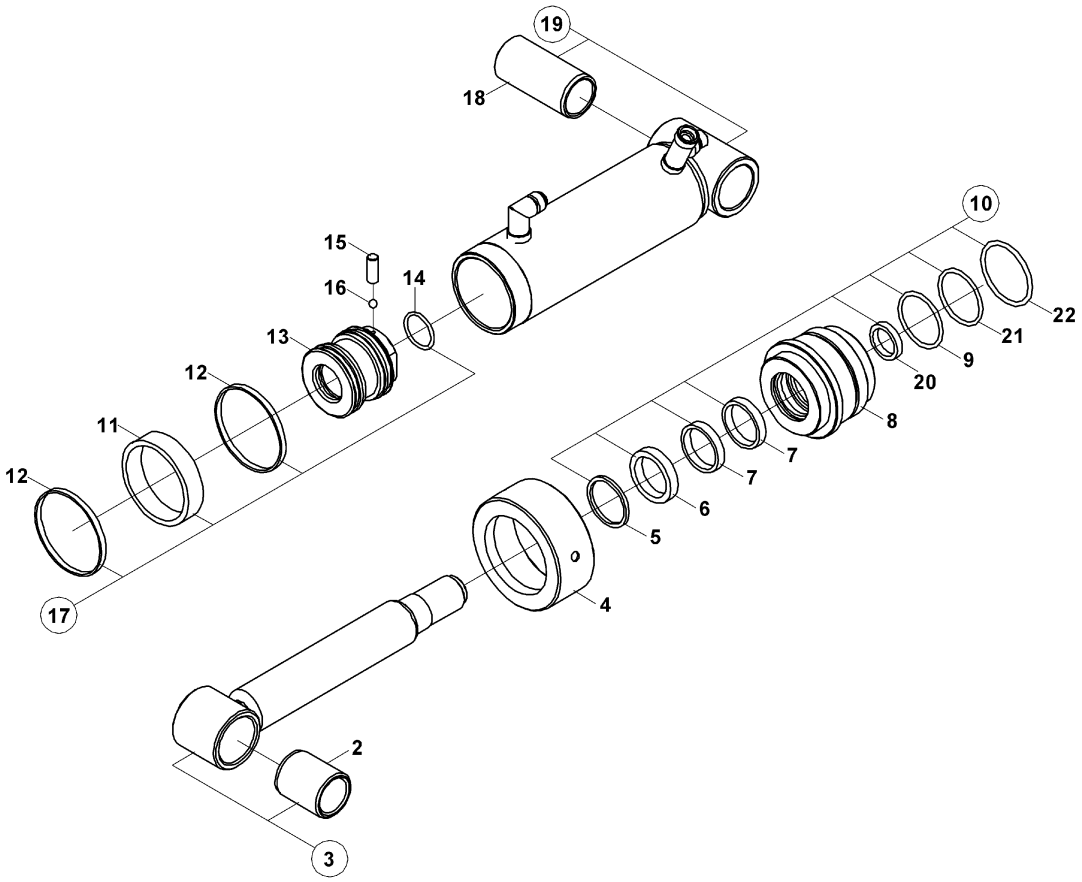

TESVİYE KÜREĞİ SİLİNDİRİ (ÇİFT EKSENLİ) SAĞ
LEVELLING BLADE CYLINDER (DOUBLE AXIS) RH

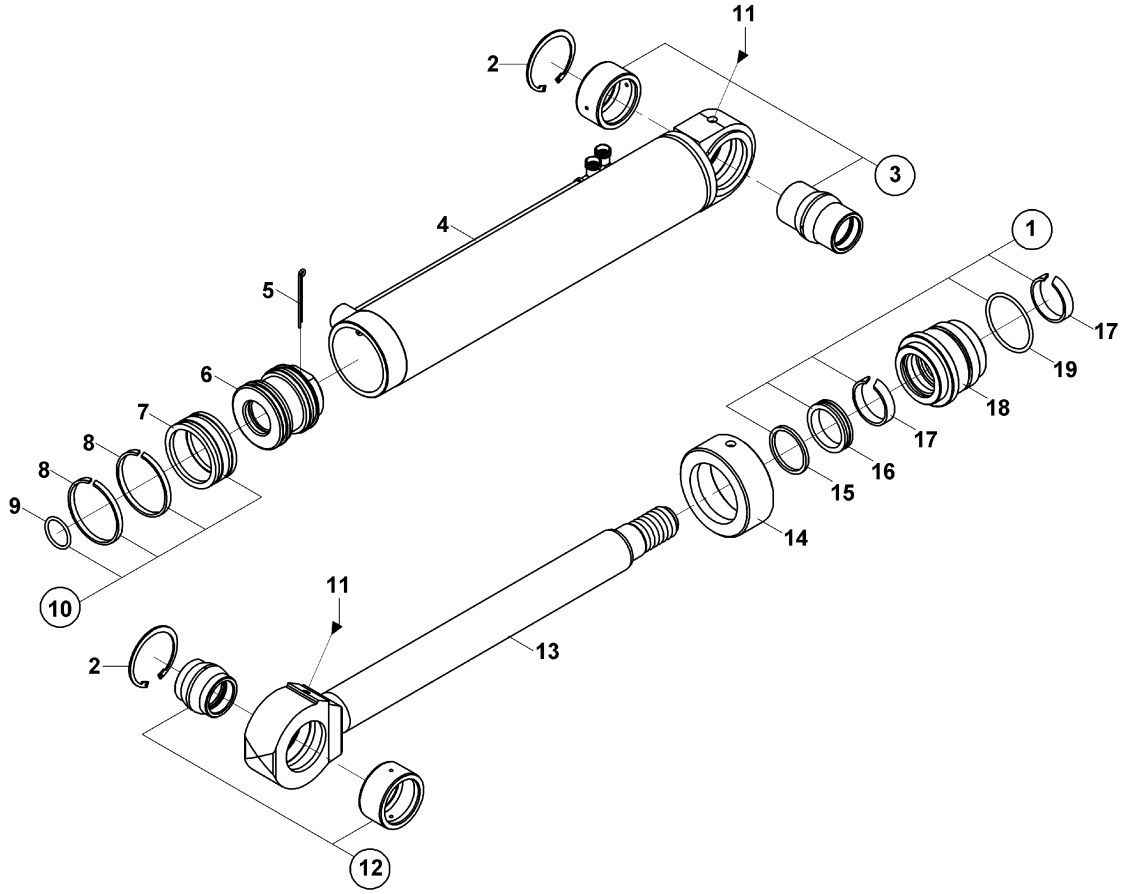

TESVİYE KÜREĞİ SİLİNDİRİ (ÇİFT EKSENLİ) SOL
LEVELLING BLADE CYLINDER (DOUBLE AXIS) LH

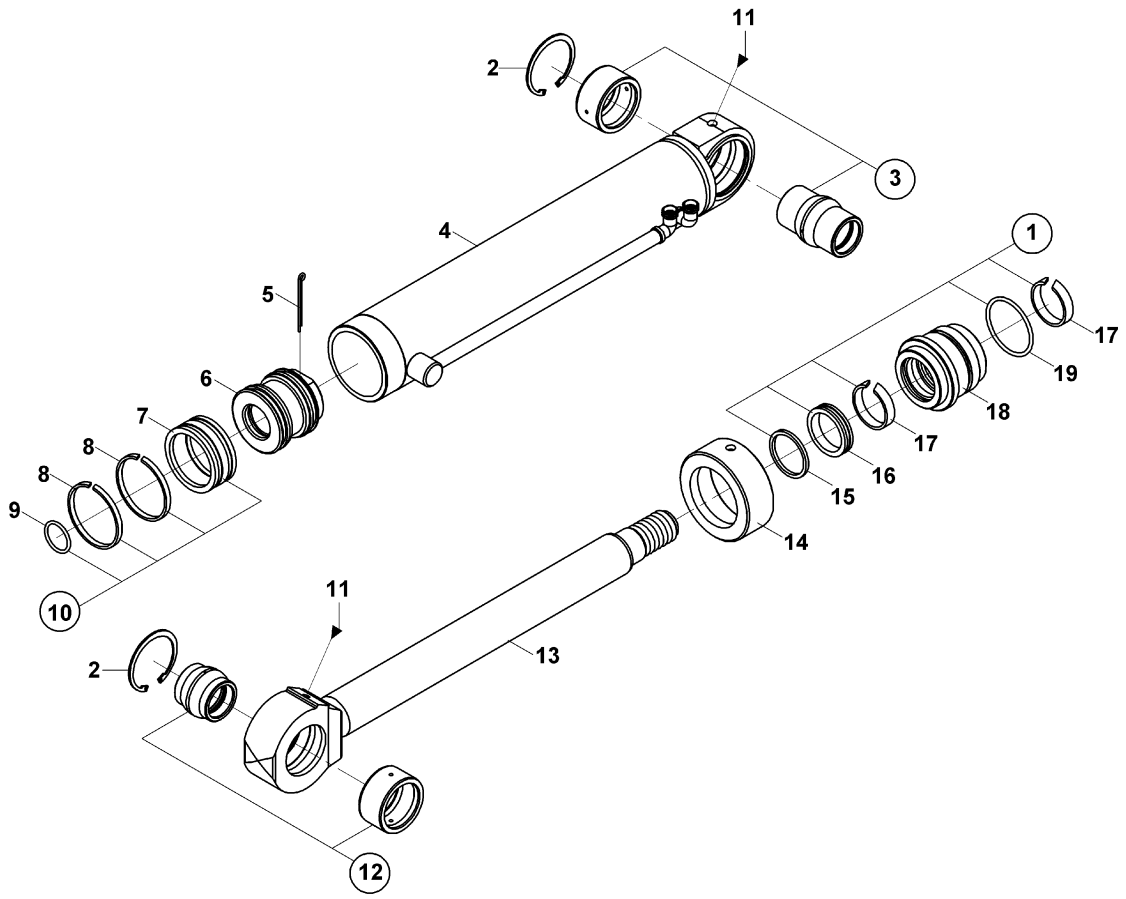

TESVİYE KÜREĞİ SİLİNDİRİ (ÇİFT EKSENLİ) MERKEZ
LEVELLING BLADE CYLINDER (DOUBLE AXIS) CENTER

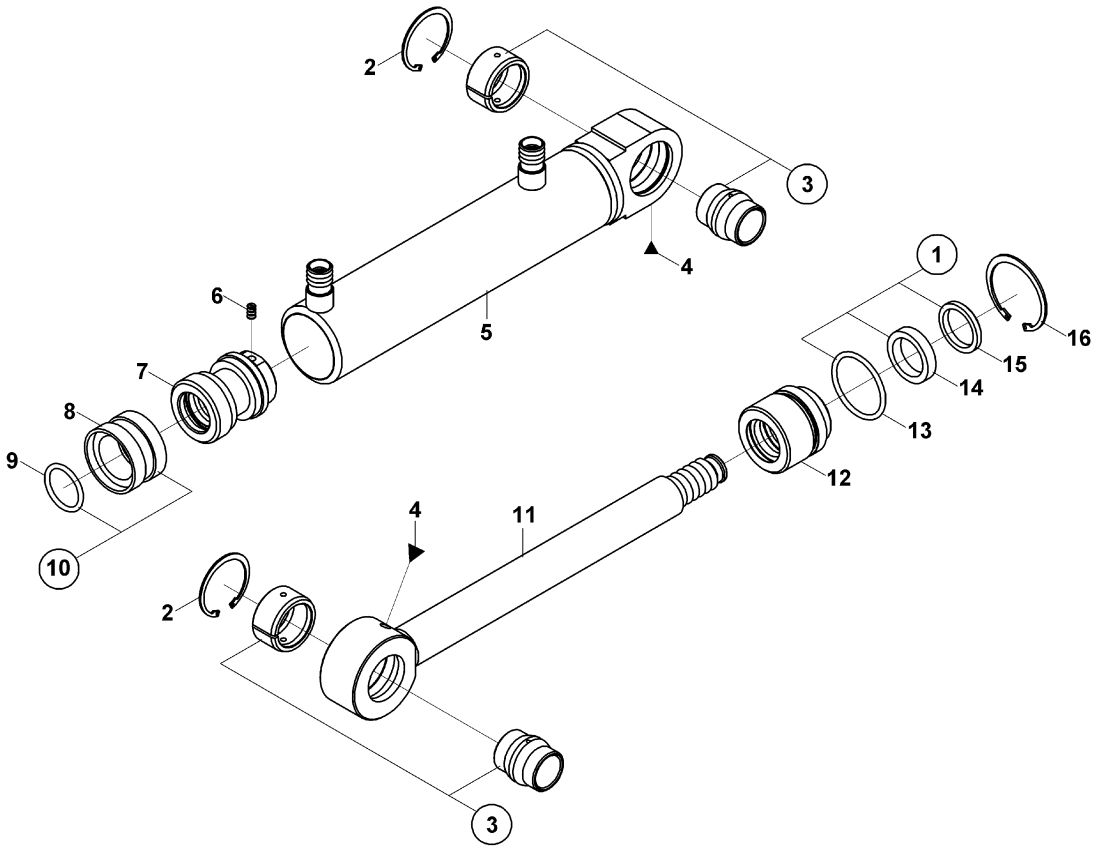

TOMRUK YÜKLEYİCİ SİLİNDİRİ
LOG GRAPPLE CYLINDER

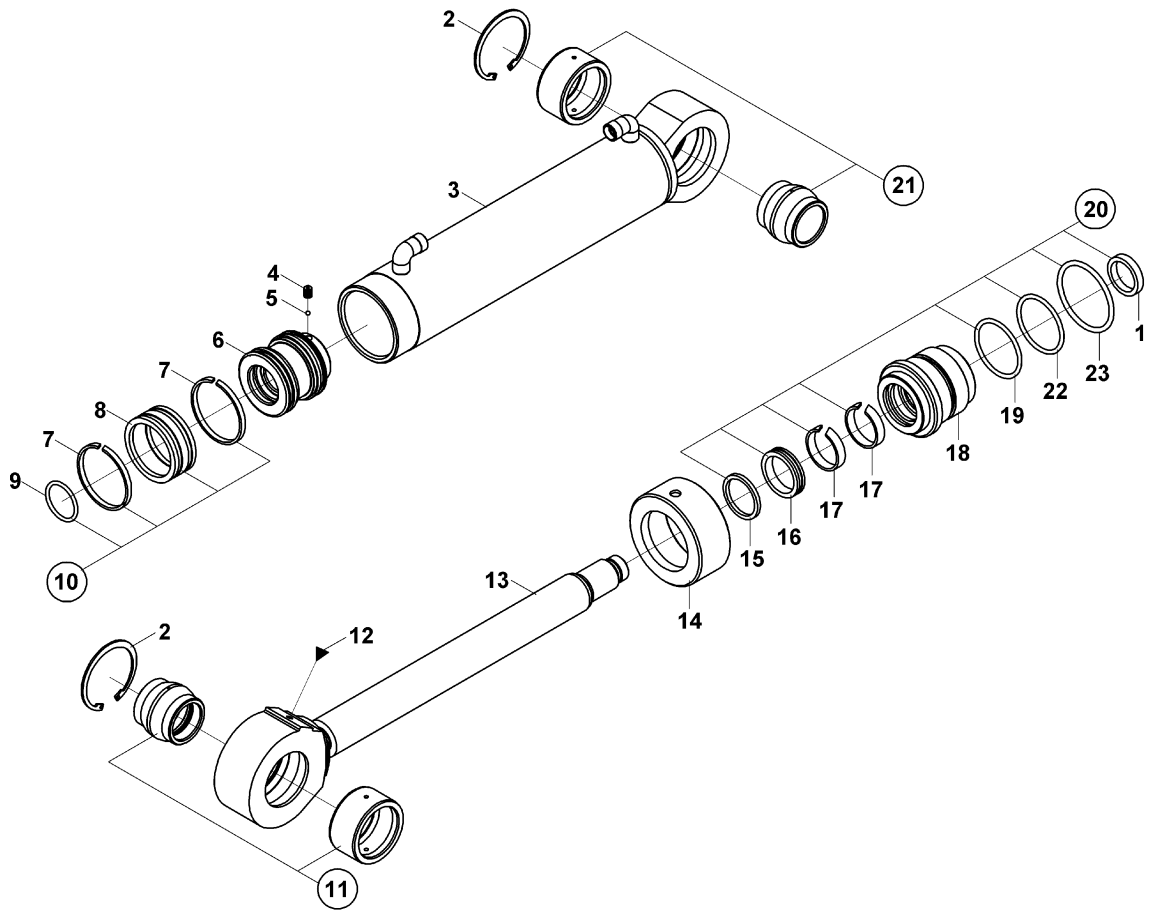

TOMRUK YÜKLEYİCİ SİLİNDİRİ (HAREKETLİ)
LOG GRAPPLE CYLINDER (WITH VERTICAL MOVEMENT)

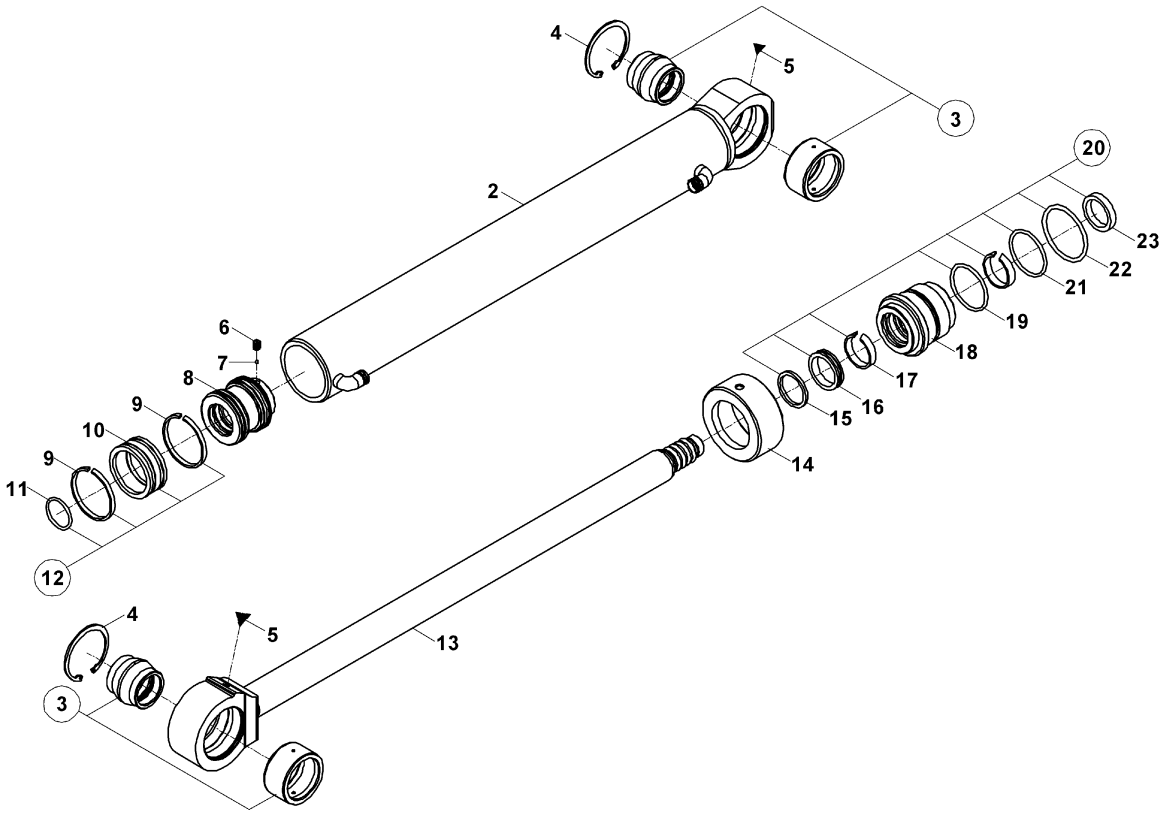

DÖNERLİ KANAL KEPÇESİ SİLİNDİRİ
TILTING BUCKET CYLINDER

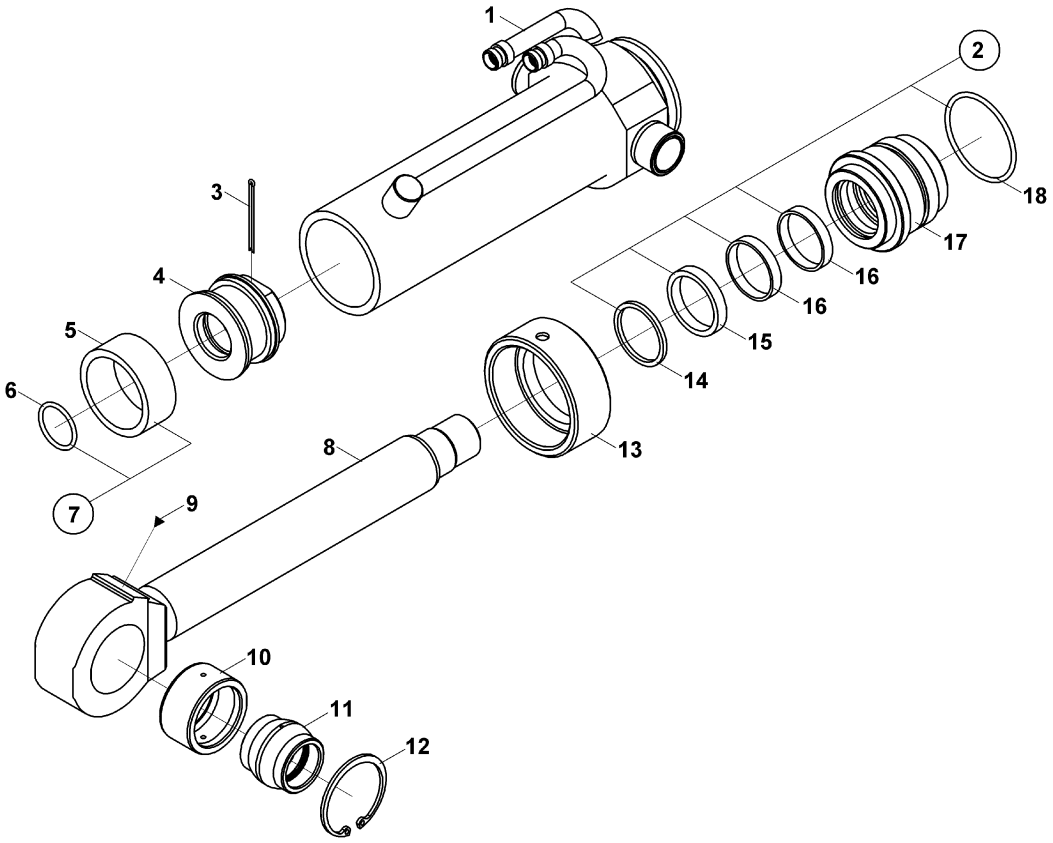

BOM KİLİT SİLİNDİRİ
BOOM LOCKING CYLINDER

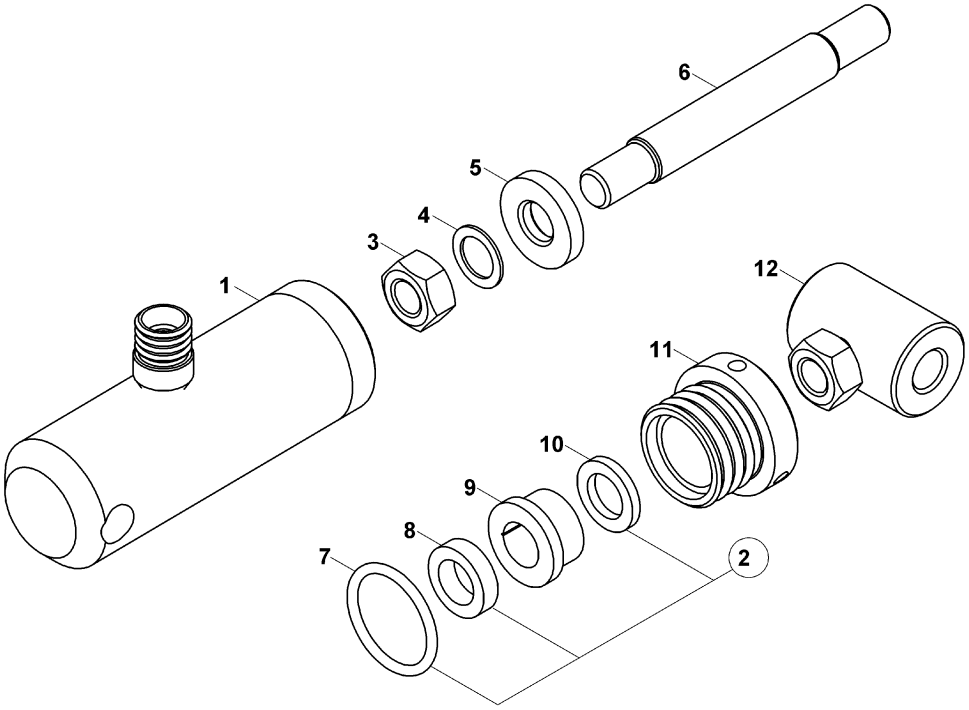

BOM KİLİT SİLİNDİRİ (MAFSALLI BOM)
BOOM LOCKING CYLINDER)KNUCKLE BOOM)

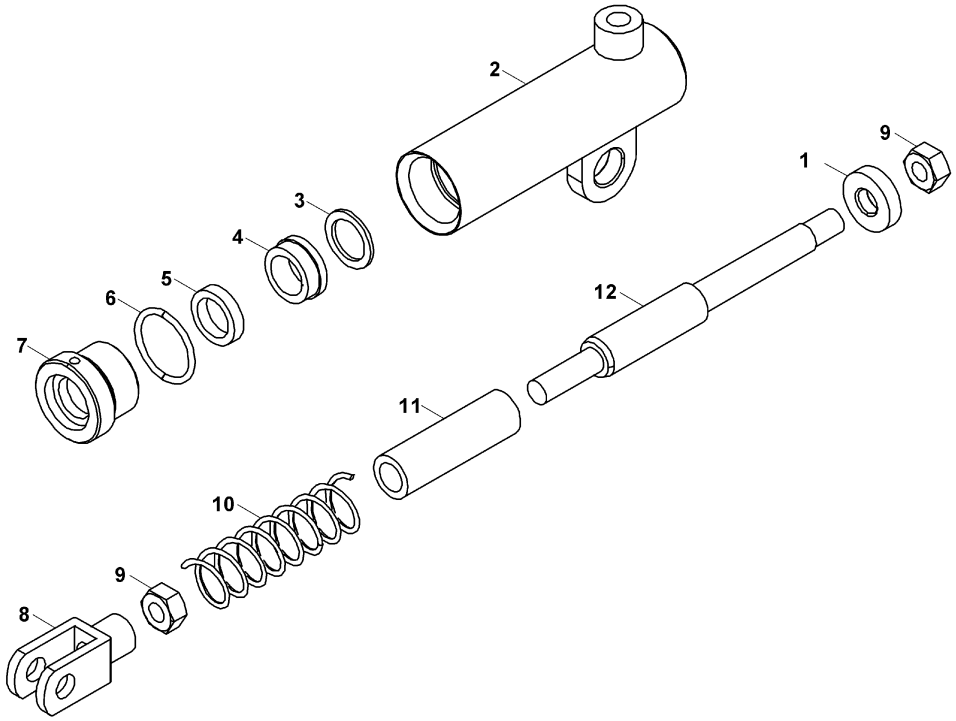

ARM SİLİNDİRİ, KAZICI
ARM CYLINDER, BACKHOE

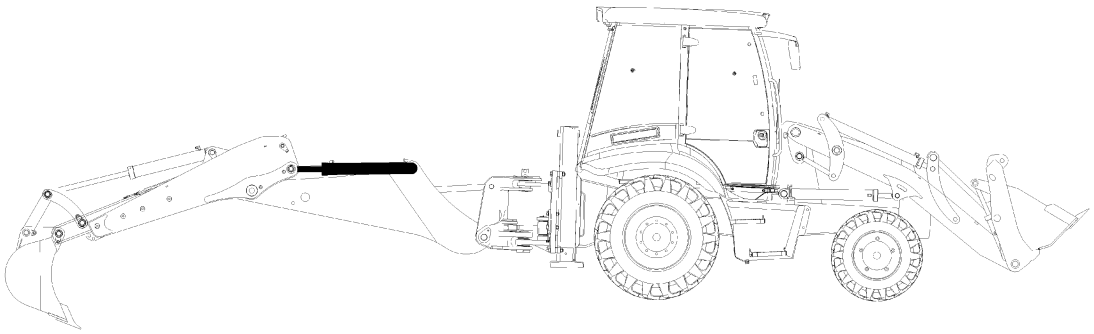

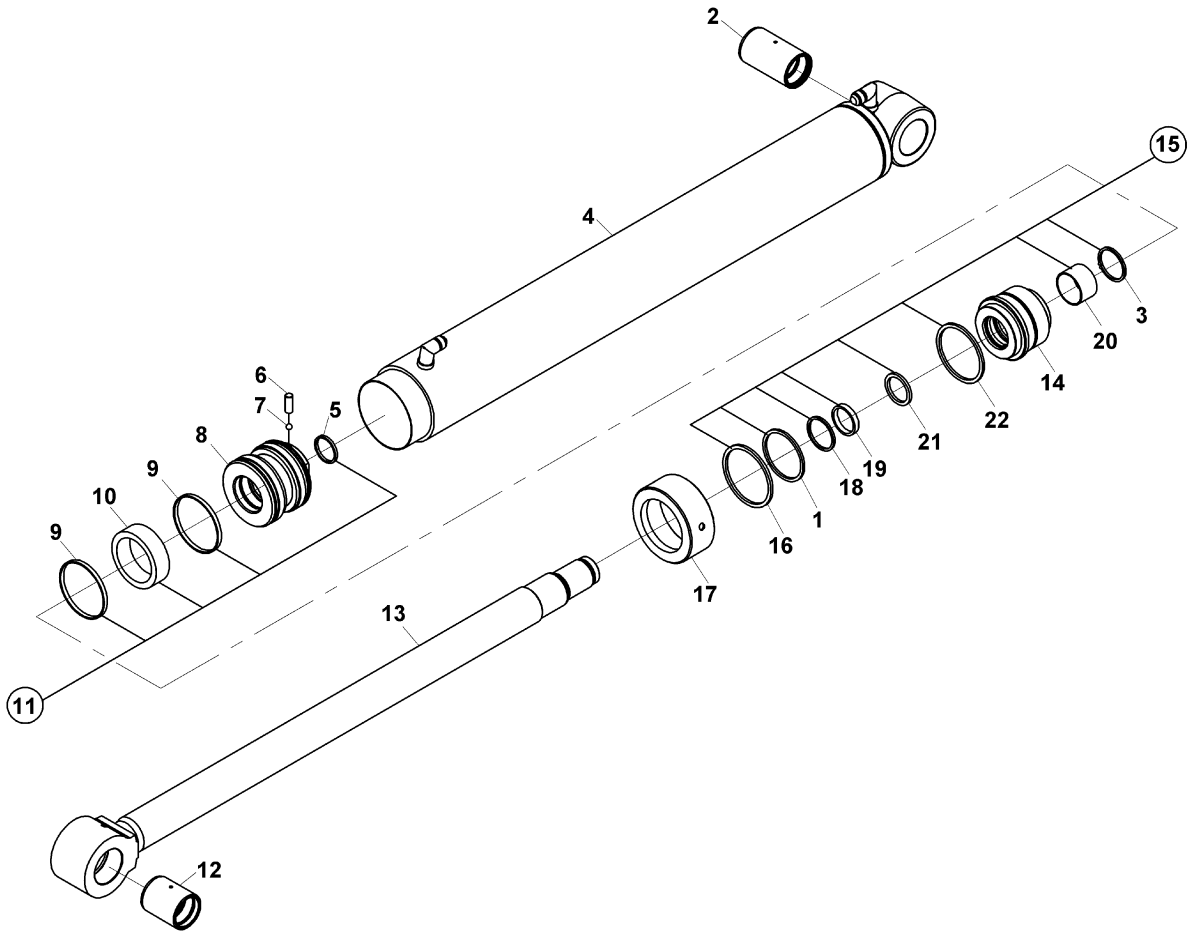

ARM SİLİNDİRİ, KAZICI
ARM CYLINDER, BACKHOE

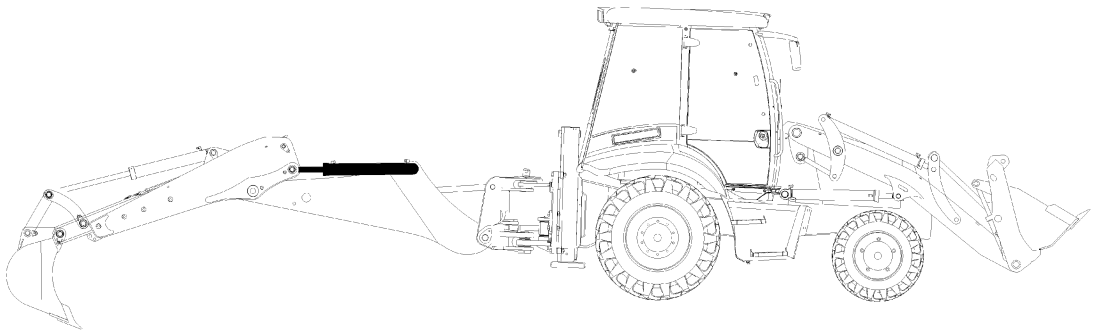

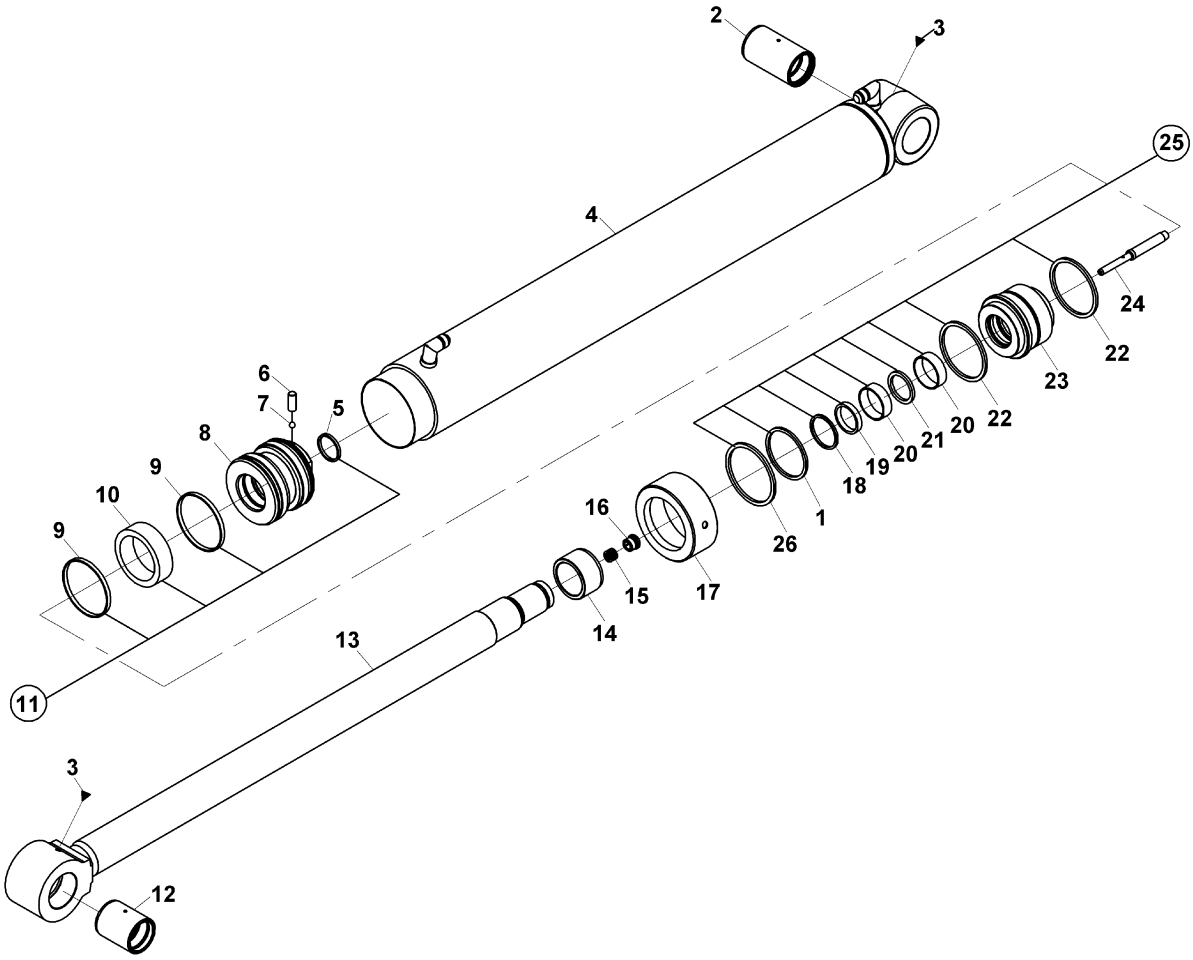

ÇEKİCİ KANCA SİLİNDİRİ
TOW HOOK CYLINDER

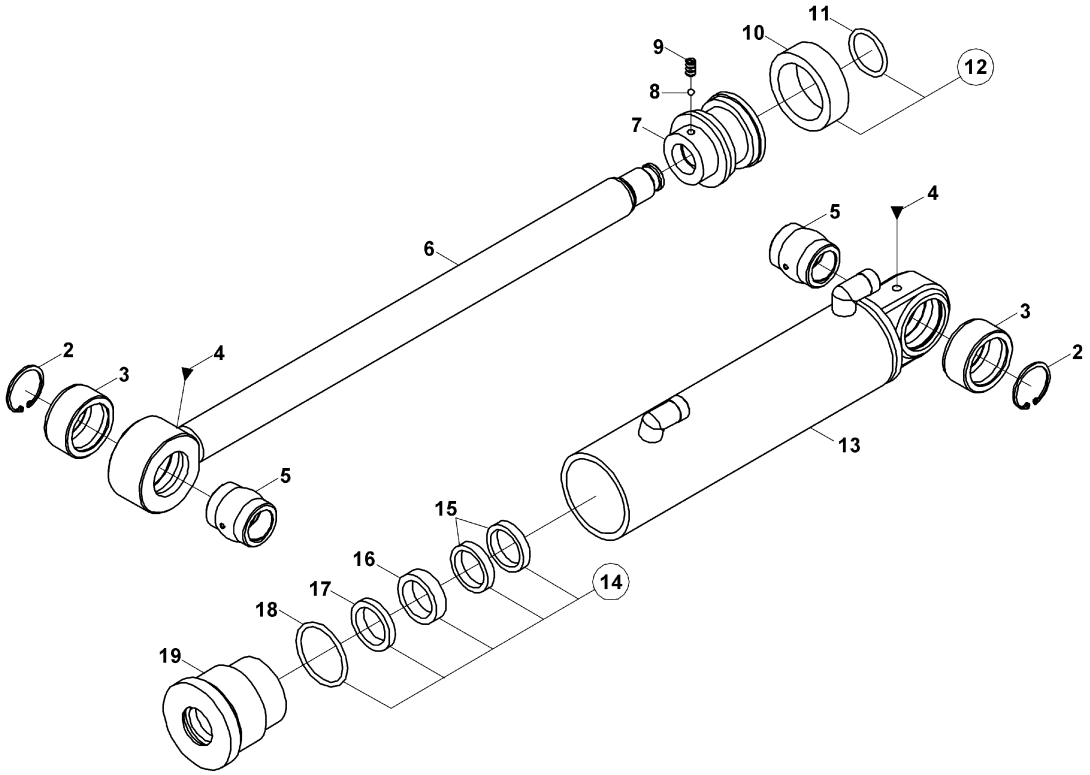

PİLOT BESLEME BLOĞU (ORANSAL VALFLİ)
PILOT SUPPLY BLOCK (WITH PROPORTIONAL VALVE)

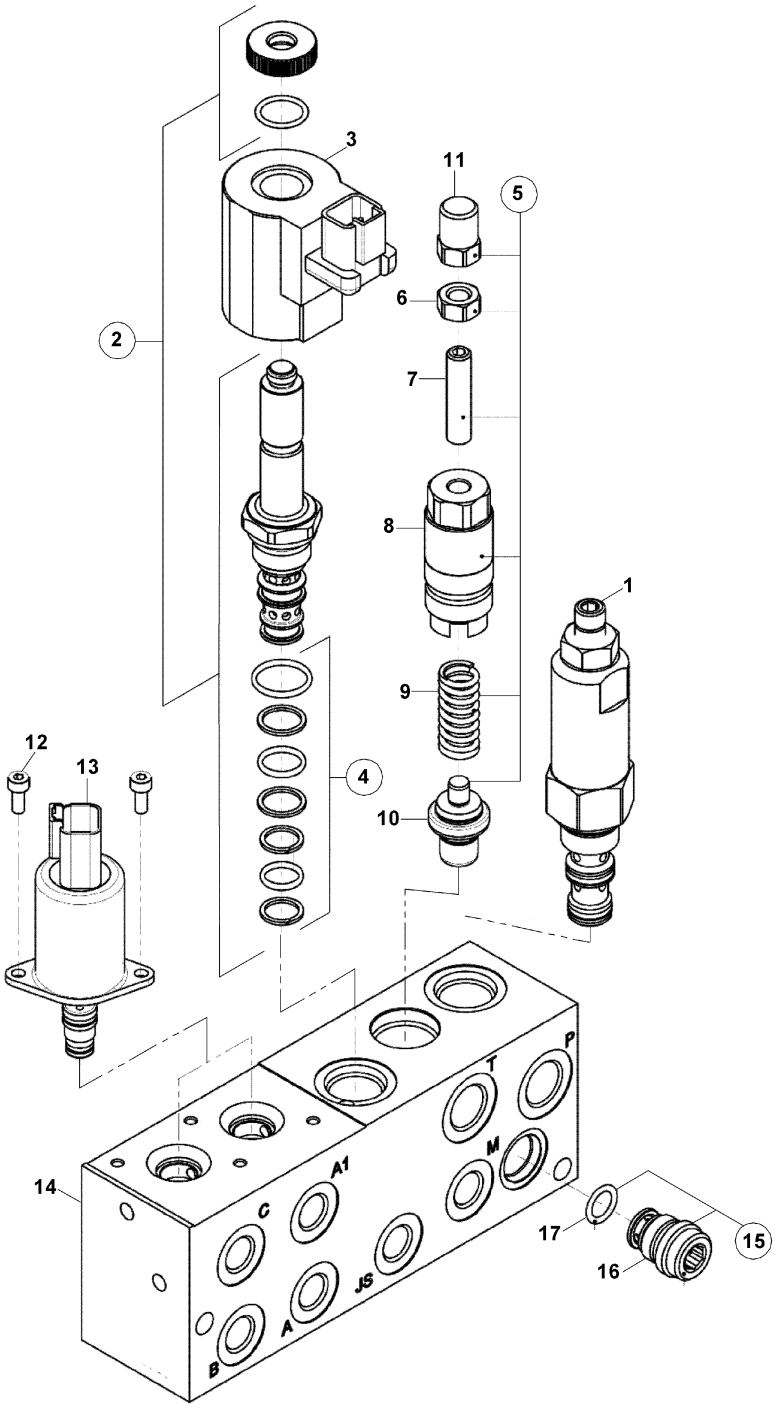

SARSINTISIZ YÜRÜYÜŞ VALFİ, MSS
MSS, VALVE

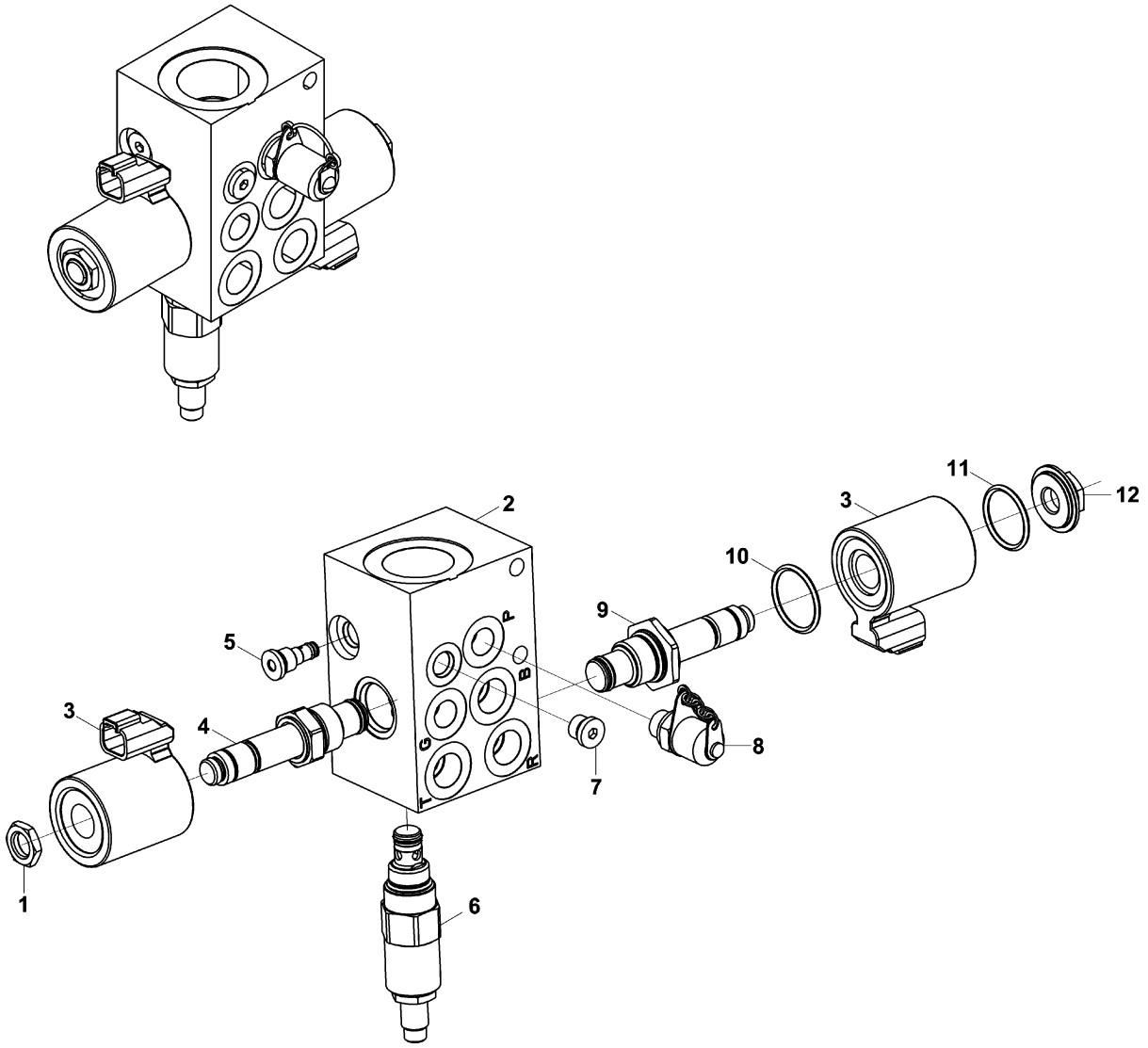

VALF, KUMANDA DEĞİŞTİRİCİ
VALVE, PATTERN SHIFTER

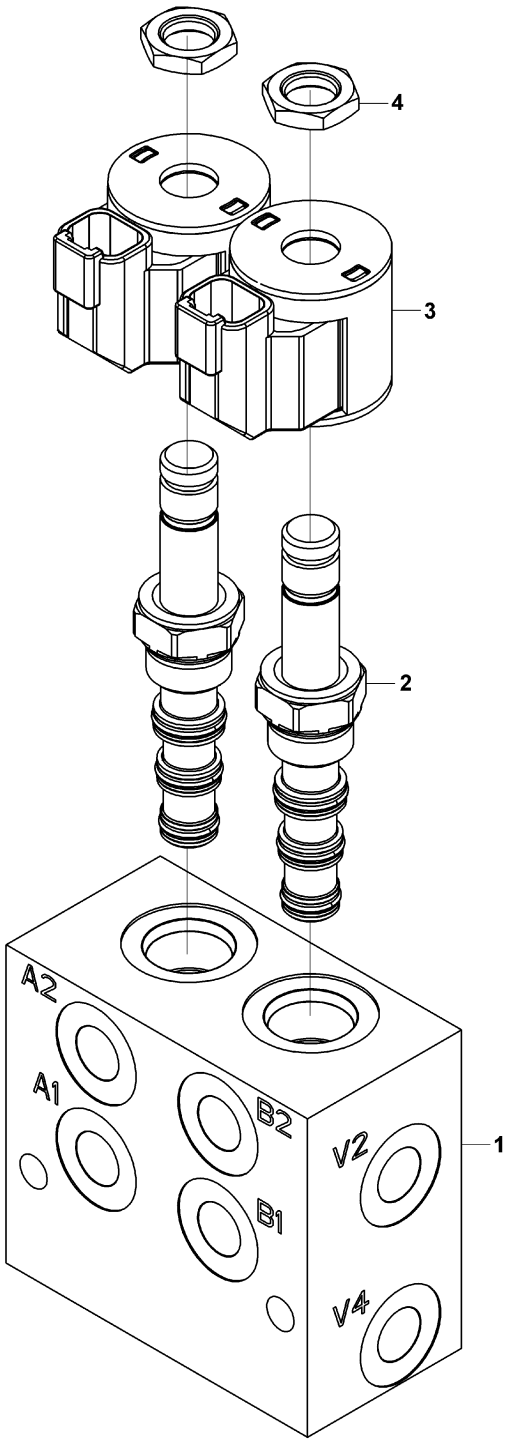

HİDROLİK TESİSAT, DİREKSİYON (TİP B)
HYDRAULIC PIPING, STEERING (TYPE B)

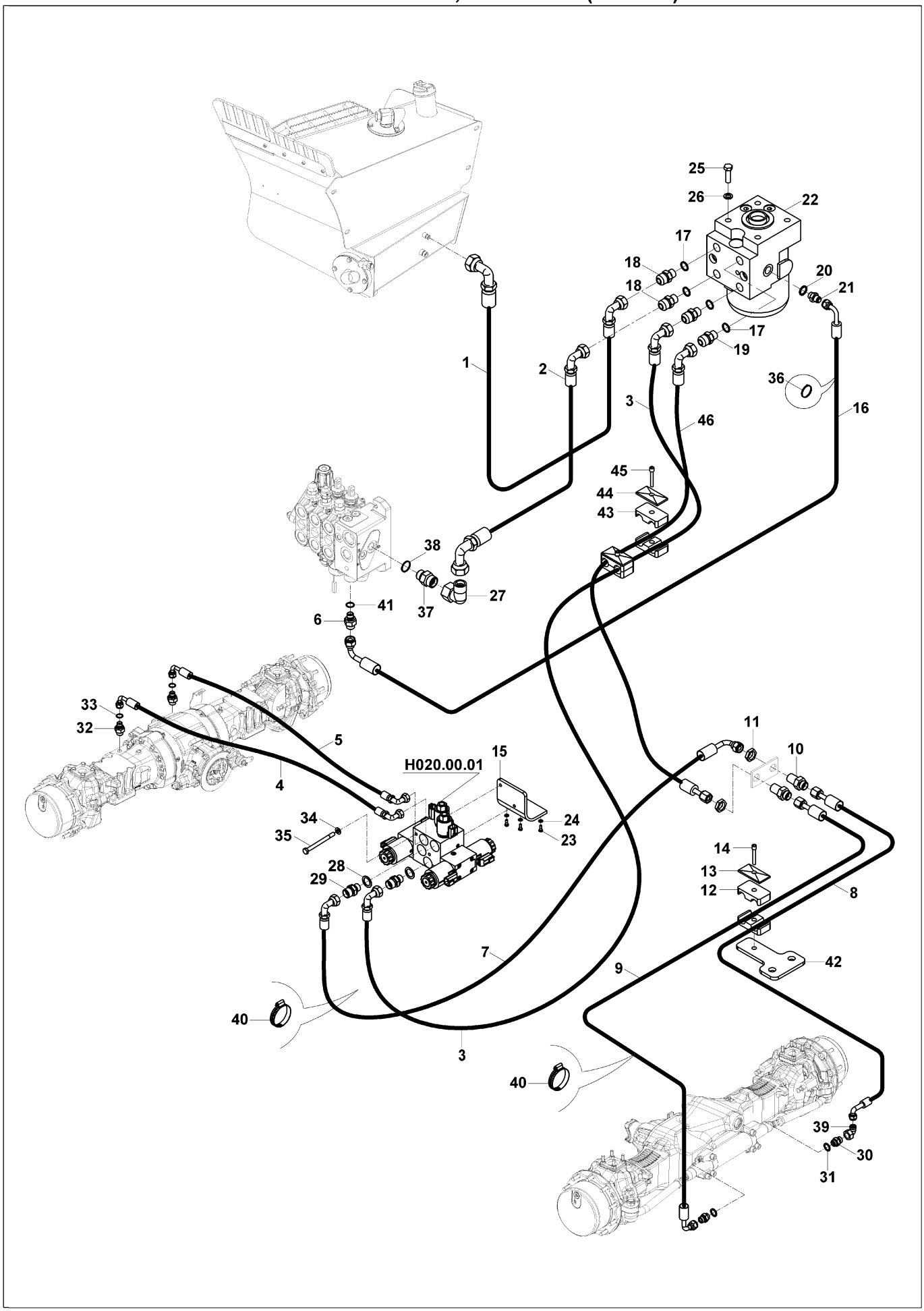

KOMBİNASYON VALFİ
COMBINATION VALVE

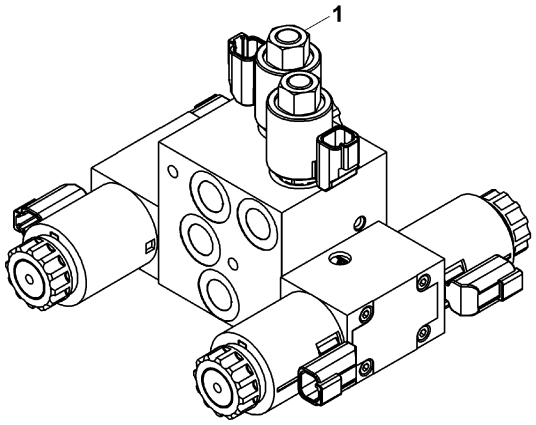

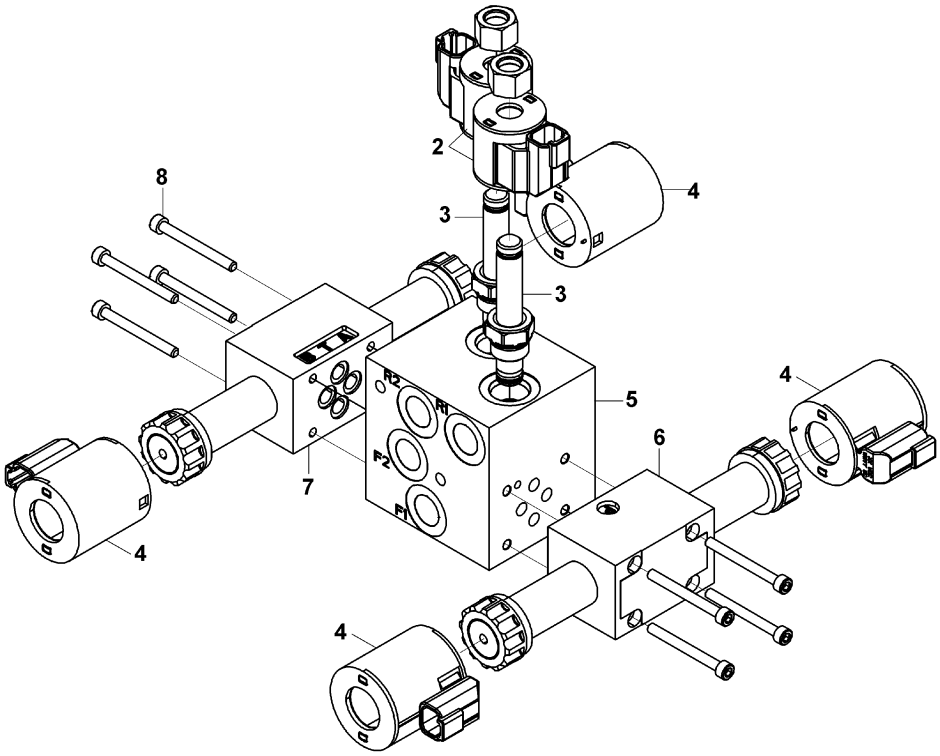

HİDROLİK TESİSAT, FREN
HYDRAULIC PIPING, BRAKE

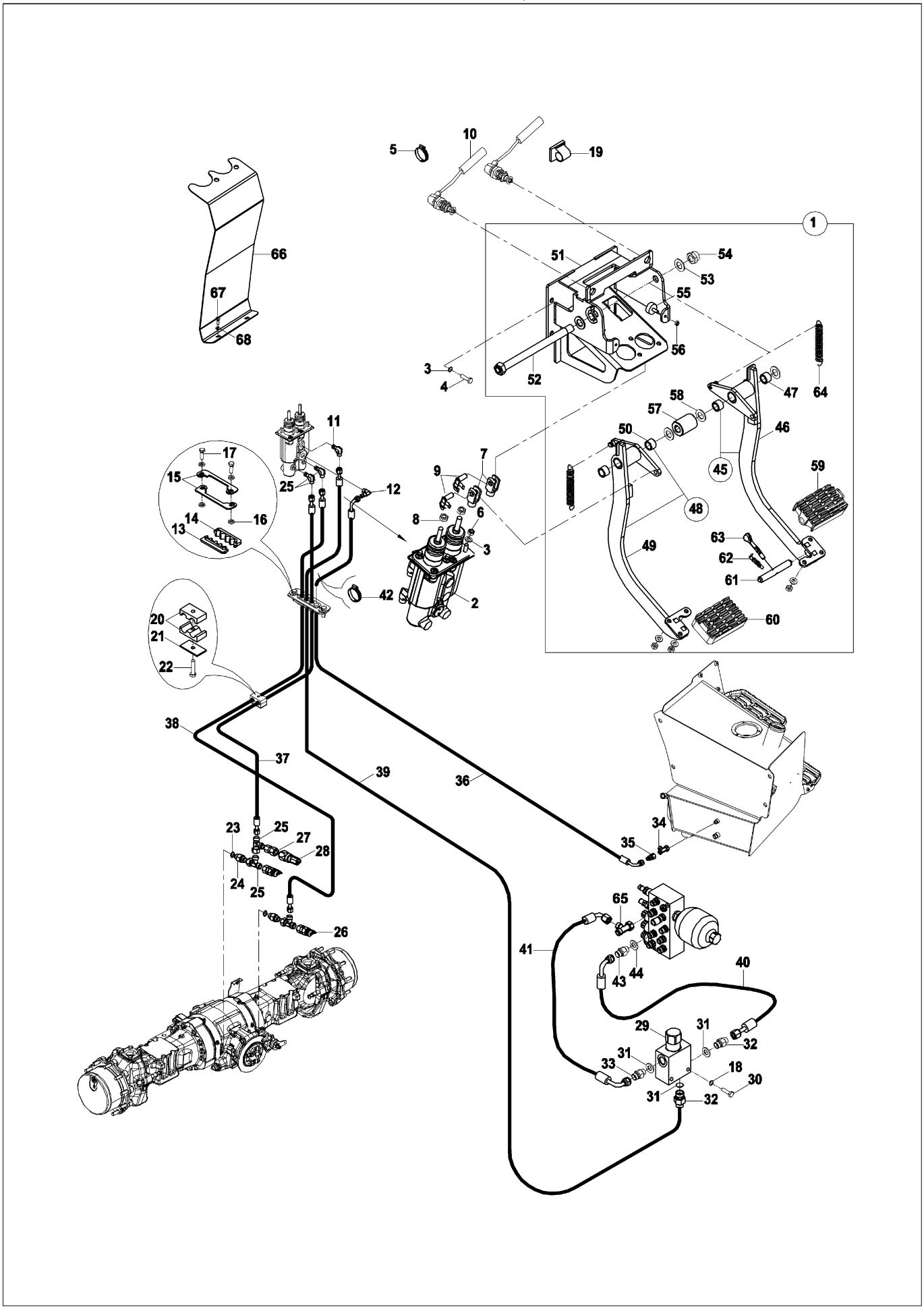

HİDROLİK TESİSAT, FREN
HYDRAULIC PIPING, BRAKE

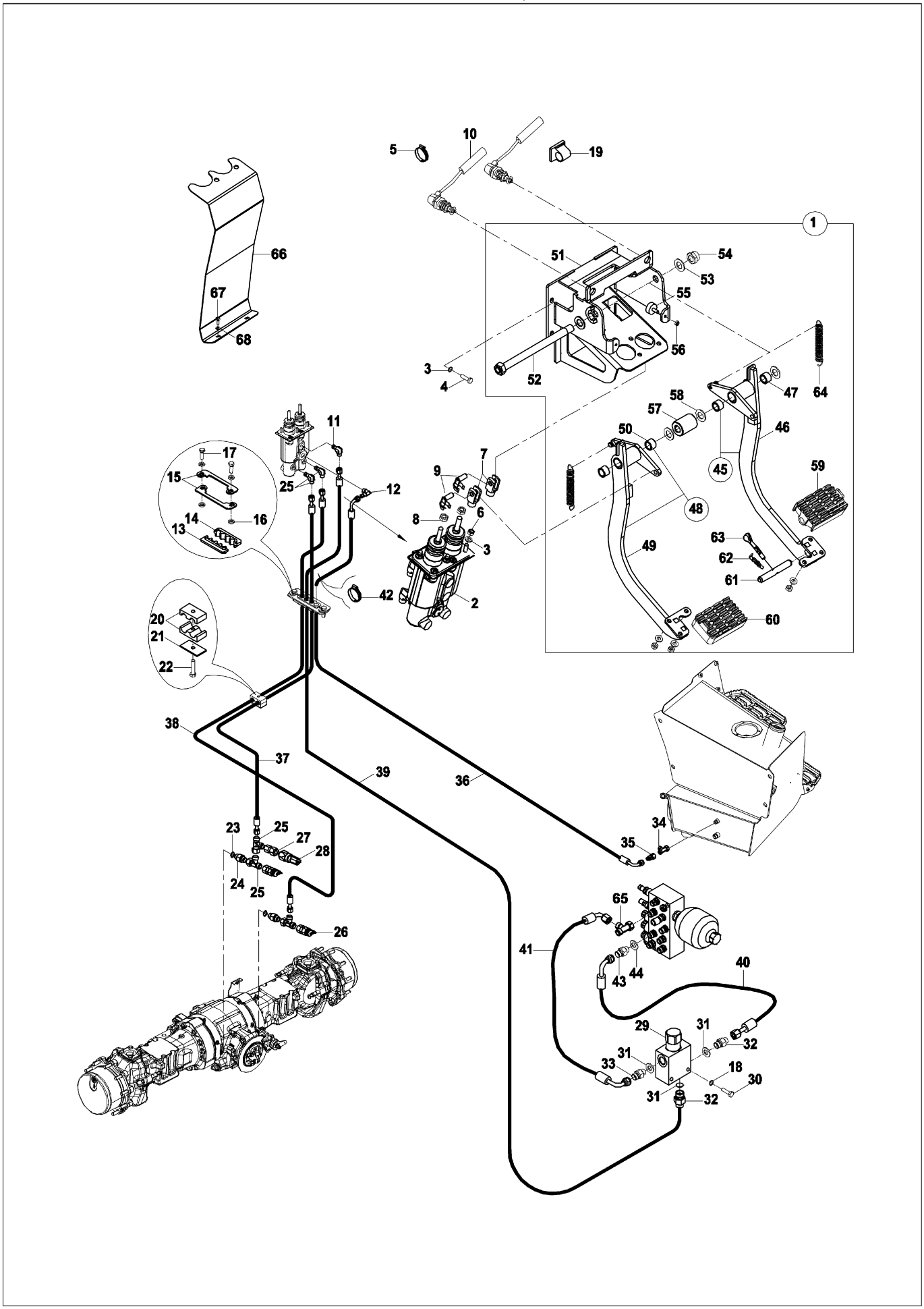

KABİN ELEKTRİĞİ (5)
CAB ELECTRIC (5)

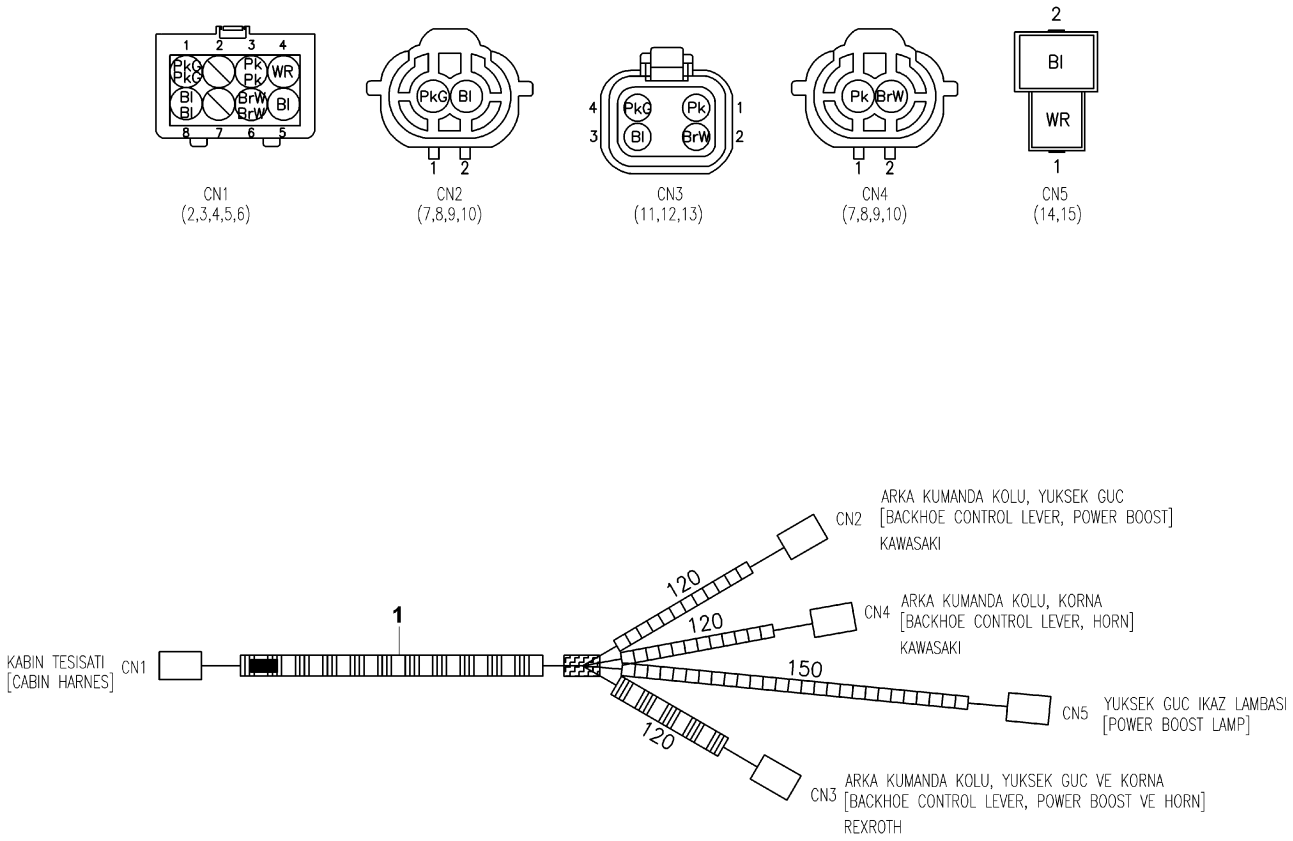

KABİN ELEKTRİĞİ (8)
CAB ELECTRIC (8)

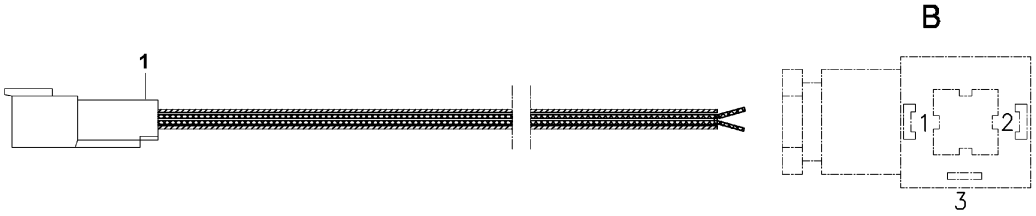

KABİN ELEKTRİĞİ (2)
CAB ELECTRIC (2)

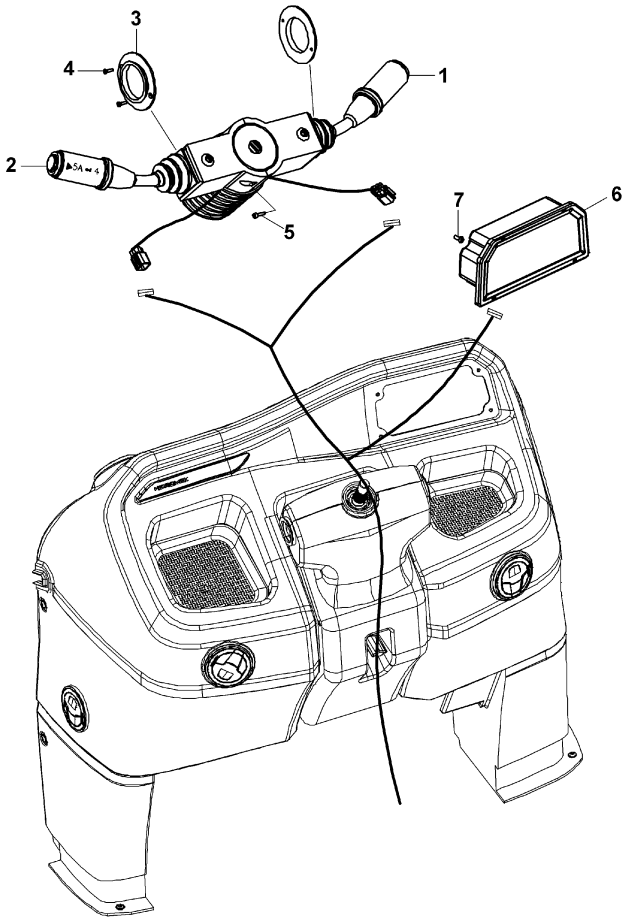

KABİN ELEKTRİĞİ (6)
CAB ELECTRIC (6)

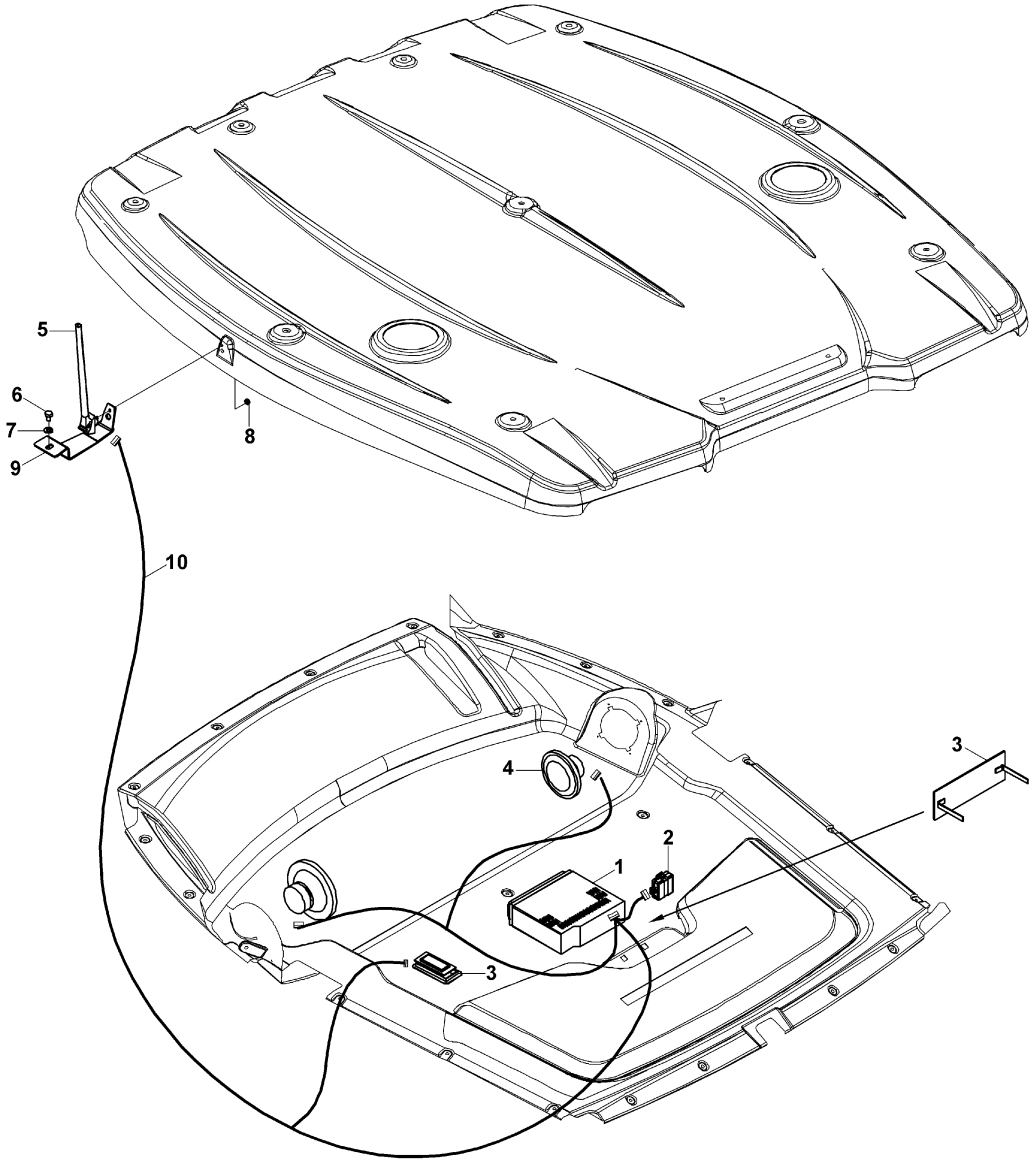

KABİN ELEKTRİĞİ (7)
CAB ELECTRIC (7)

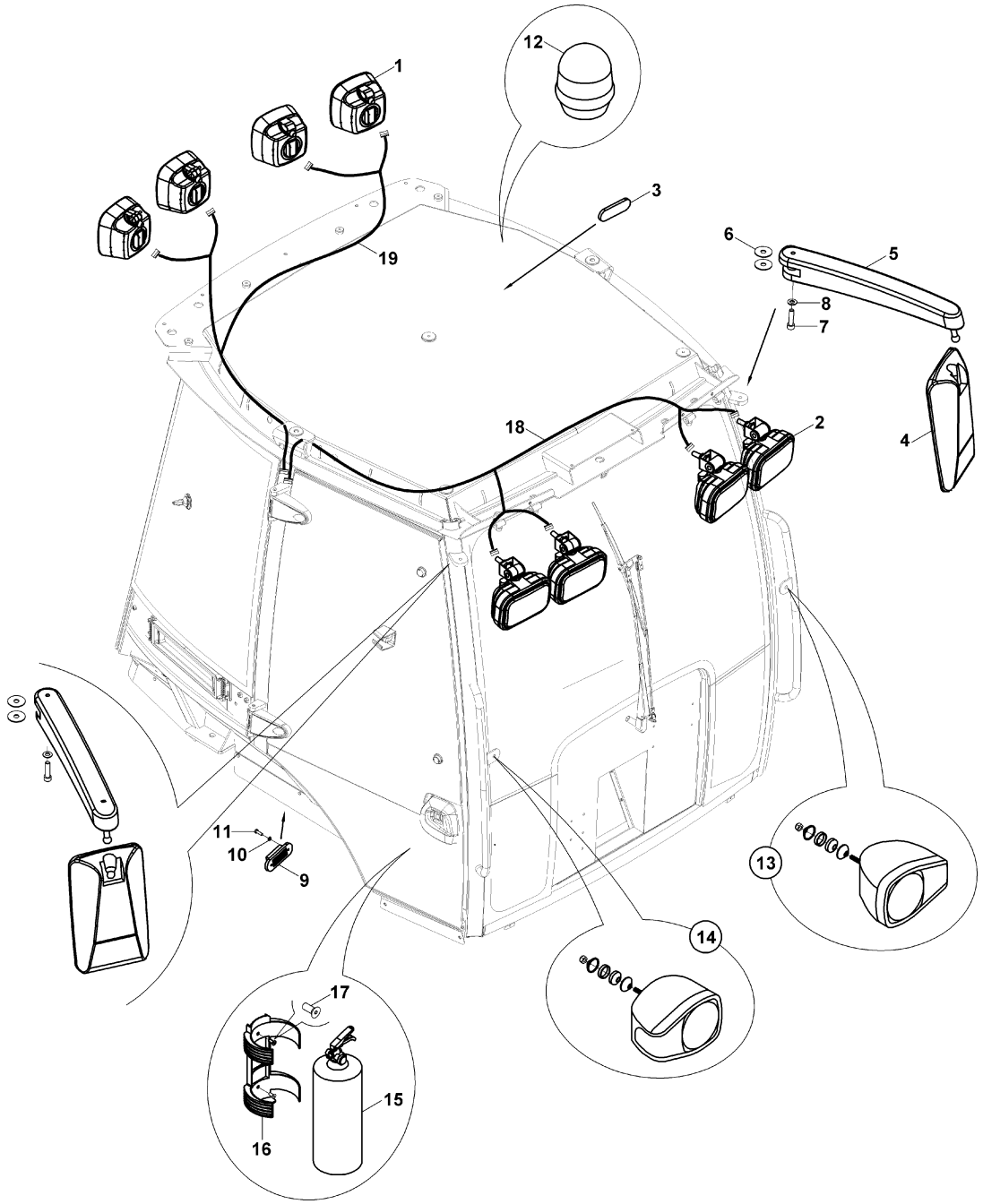

KABİN ELEKTRİĞİ (1)
CAB ELECTRIC (1)

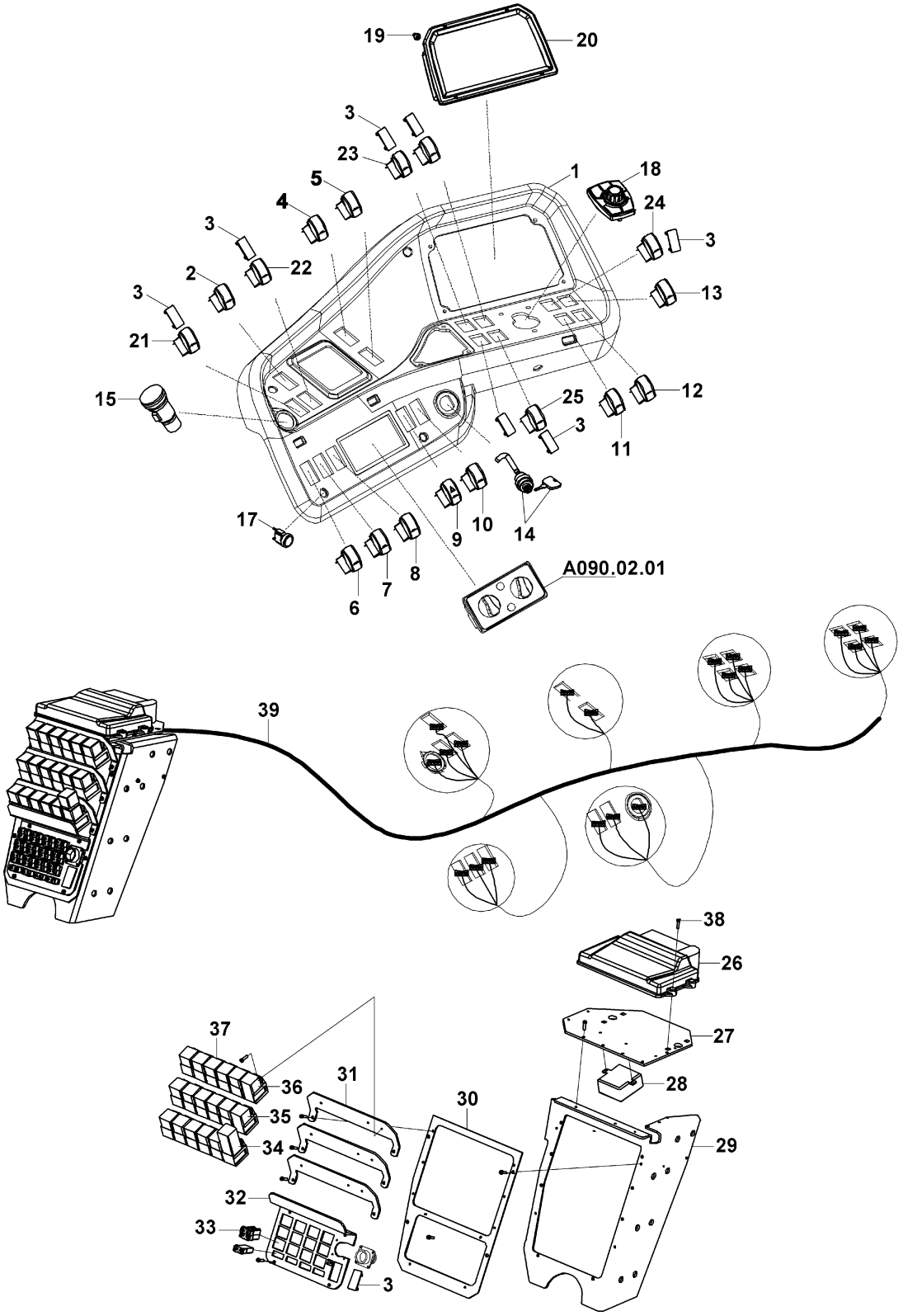

KABİN ELEKTRİĞİ (1)
CAB ELECTRIC (1)

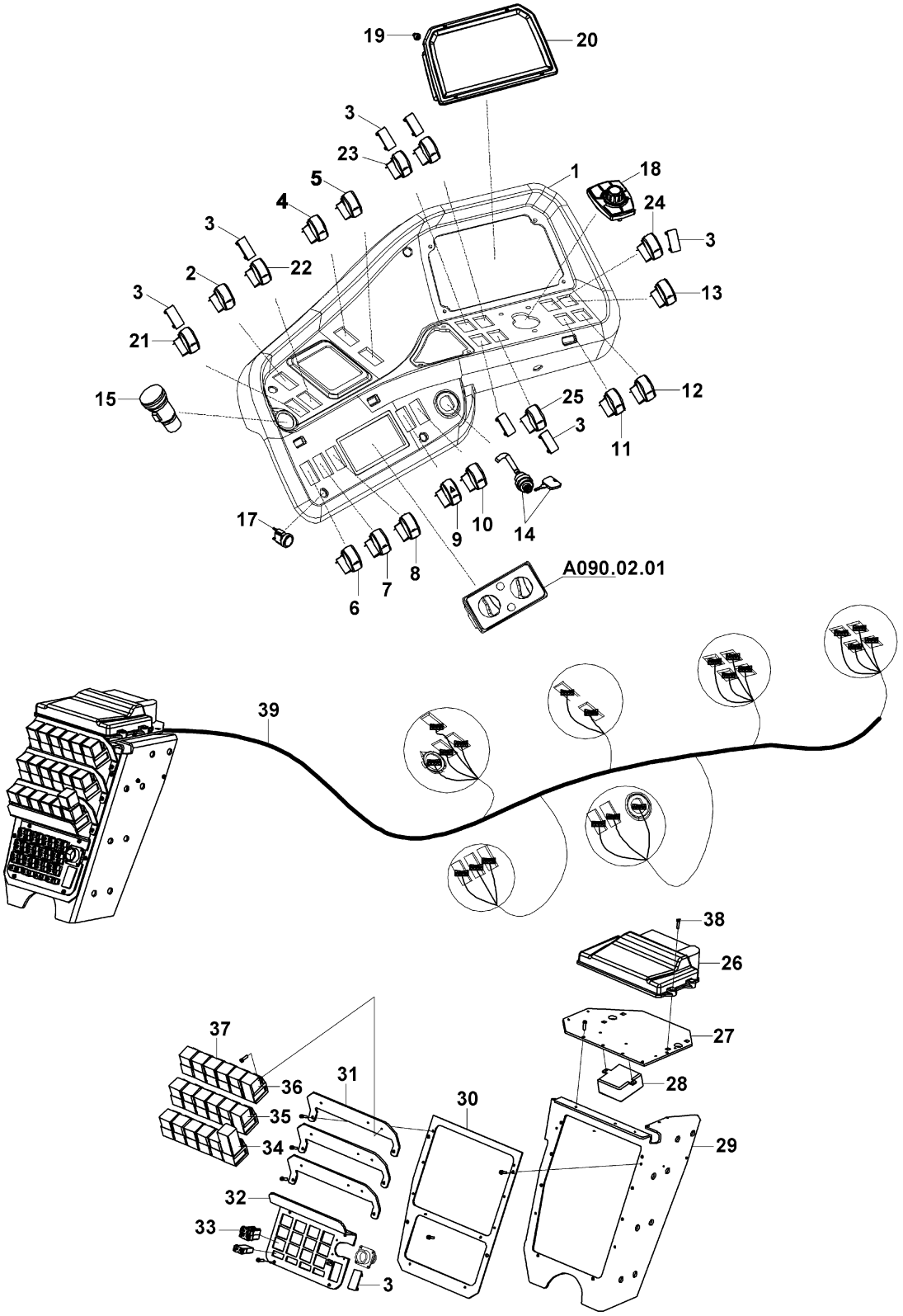

ELEKTRİK (1)
ELECTRIC (1)

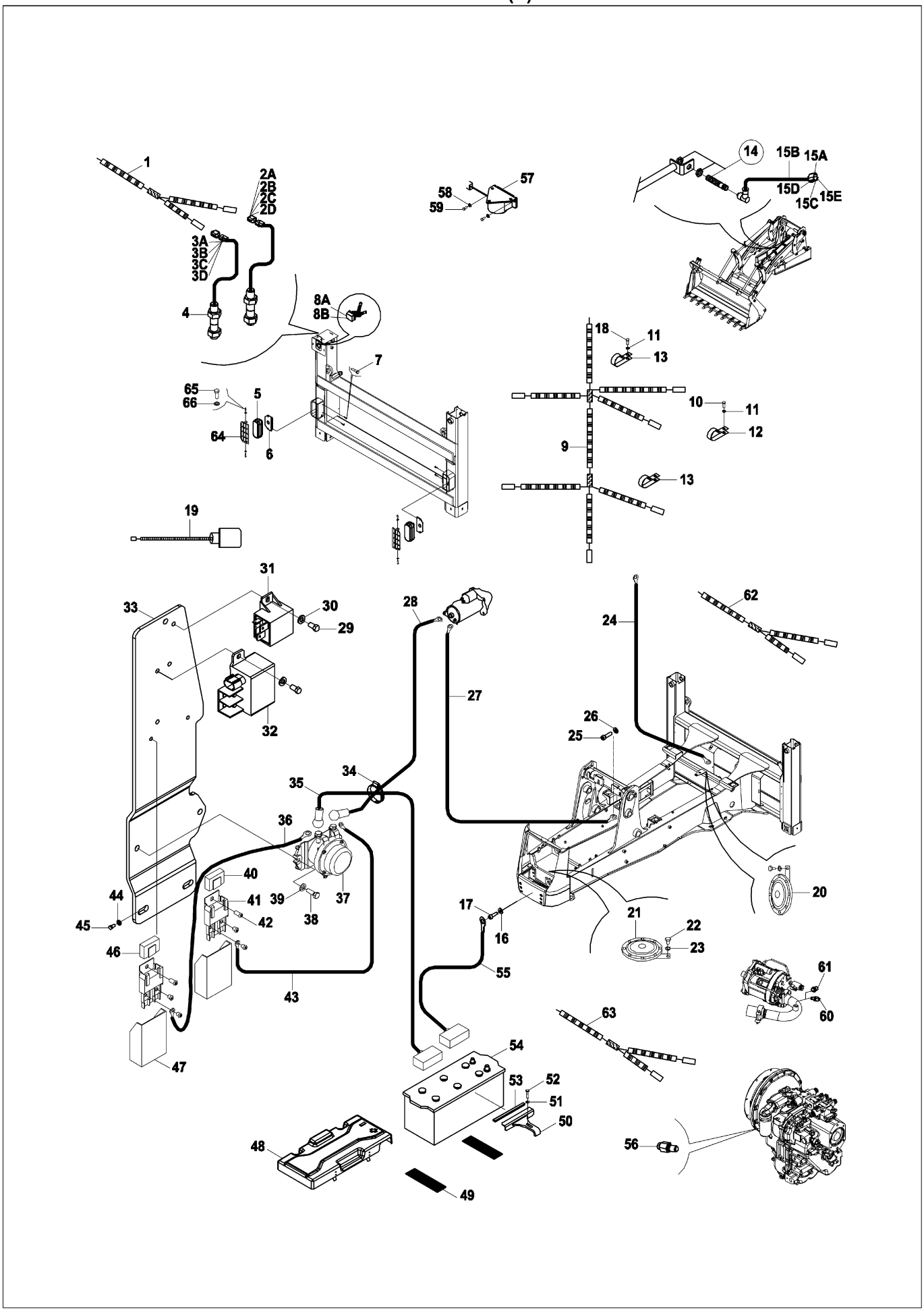

ELEKTRİK (1)
ELECTRIC (1)

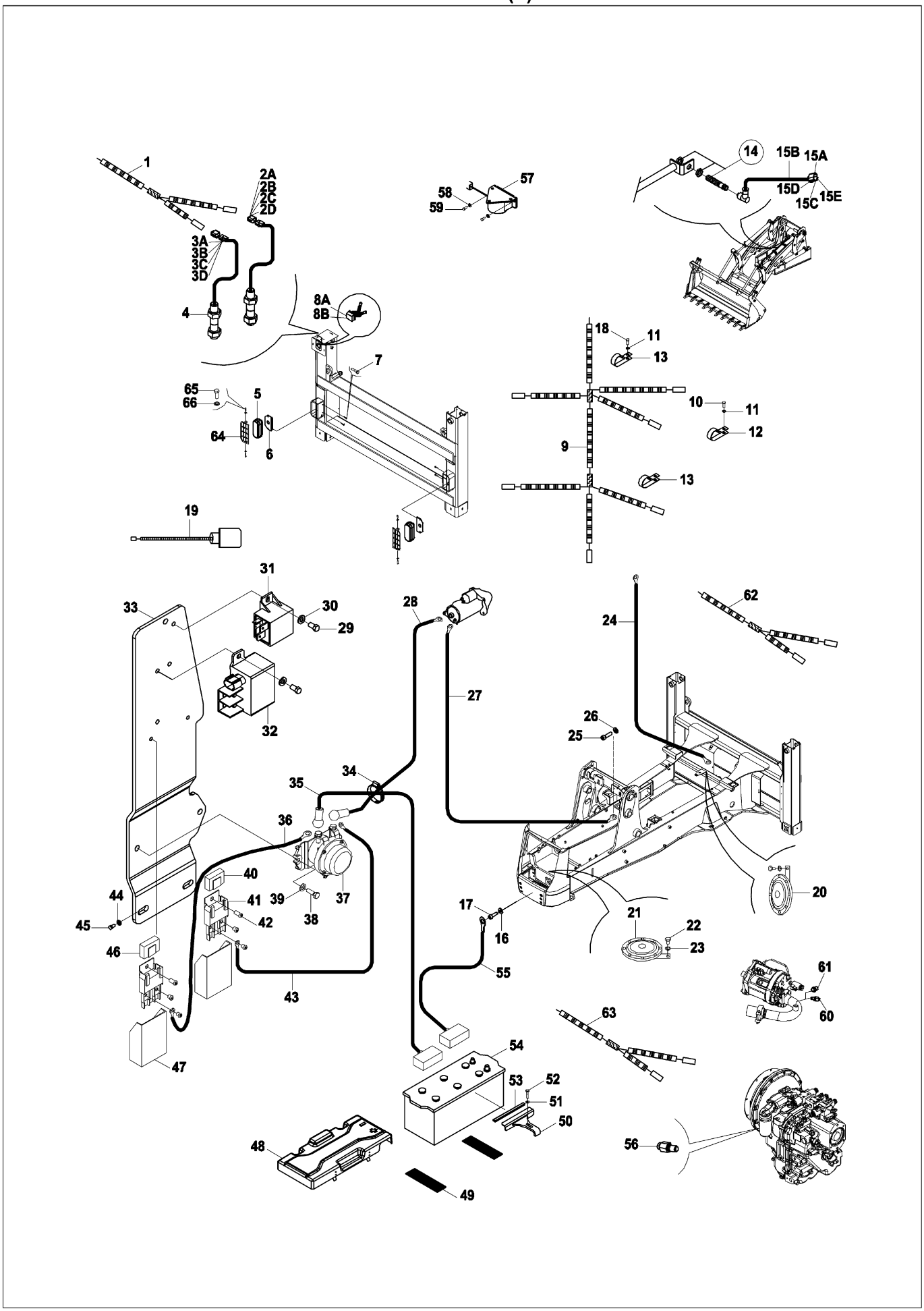

KOMPRESÖR VE ELEKTRİK TESİSATI
COMPRESSOR & HARNESS

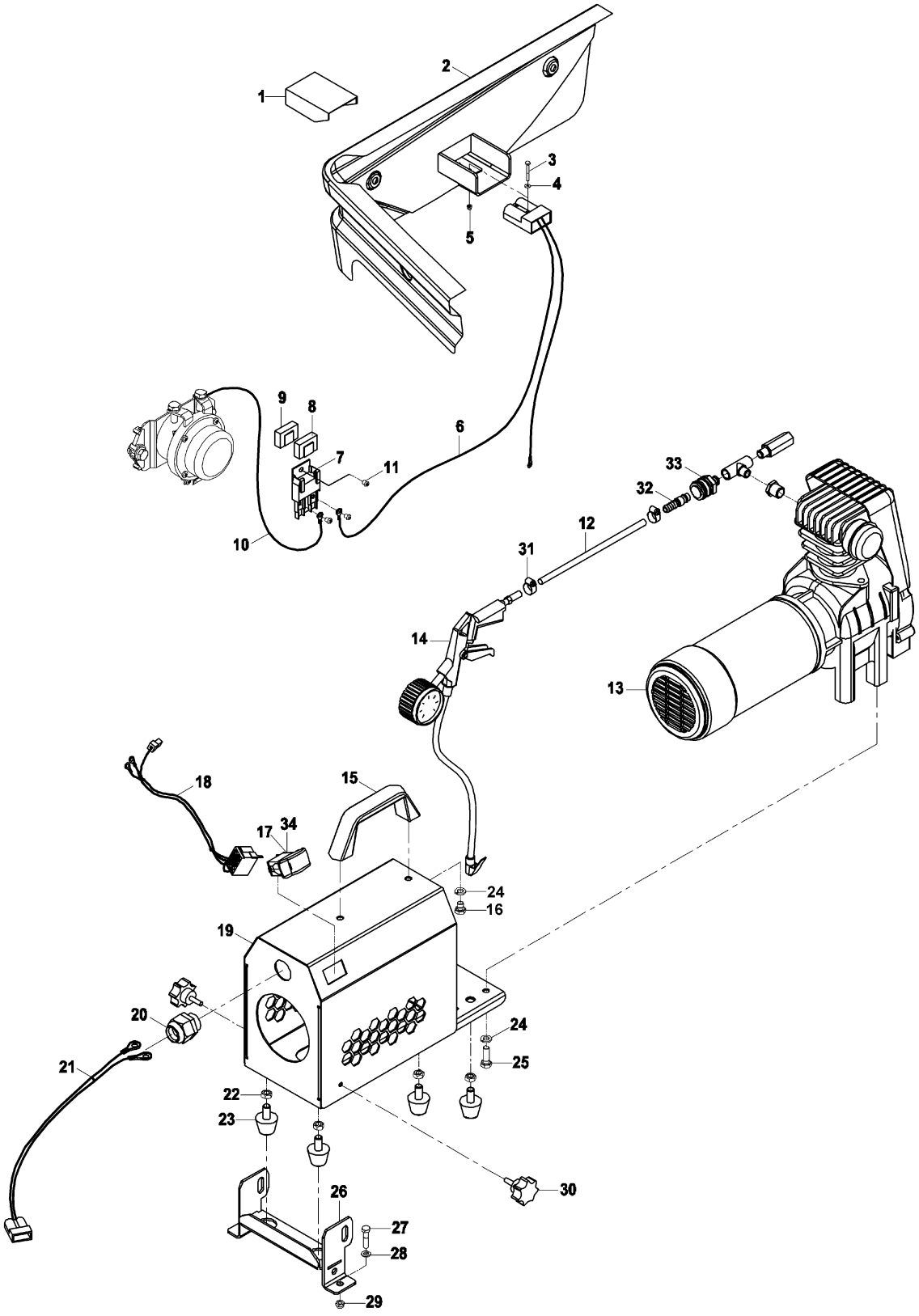

SMARTLINK (TİP B)
SMARTLINK (TYPE B)

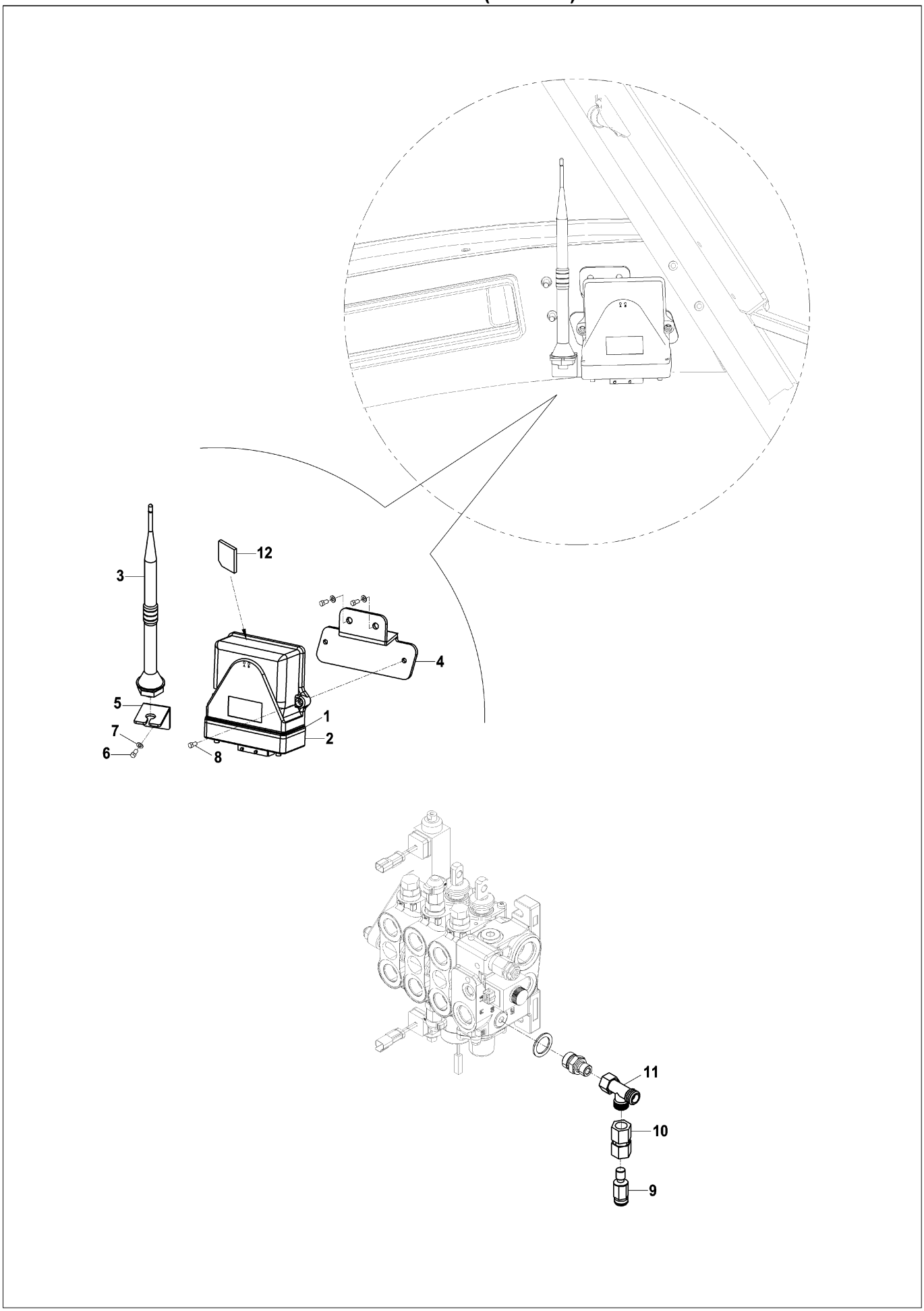

SMARTLINK
SMARTLINK

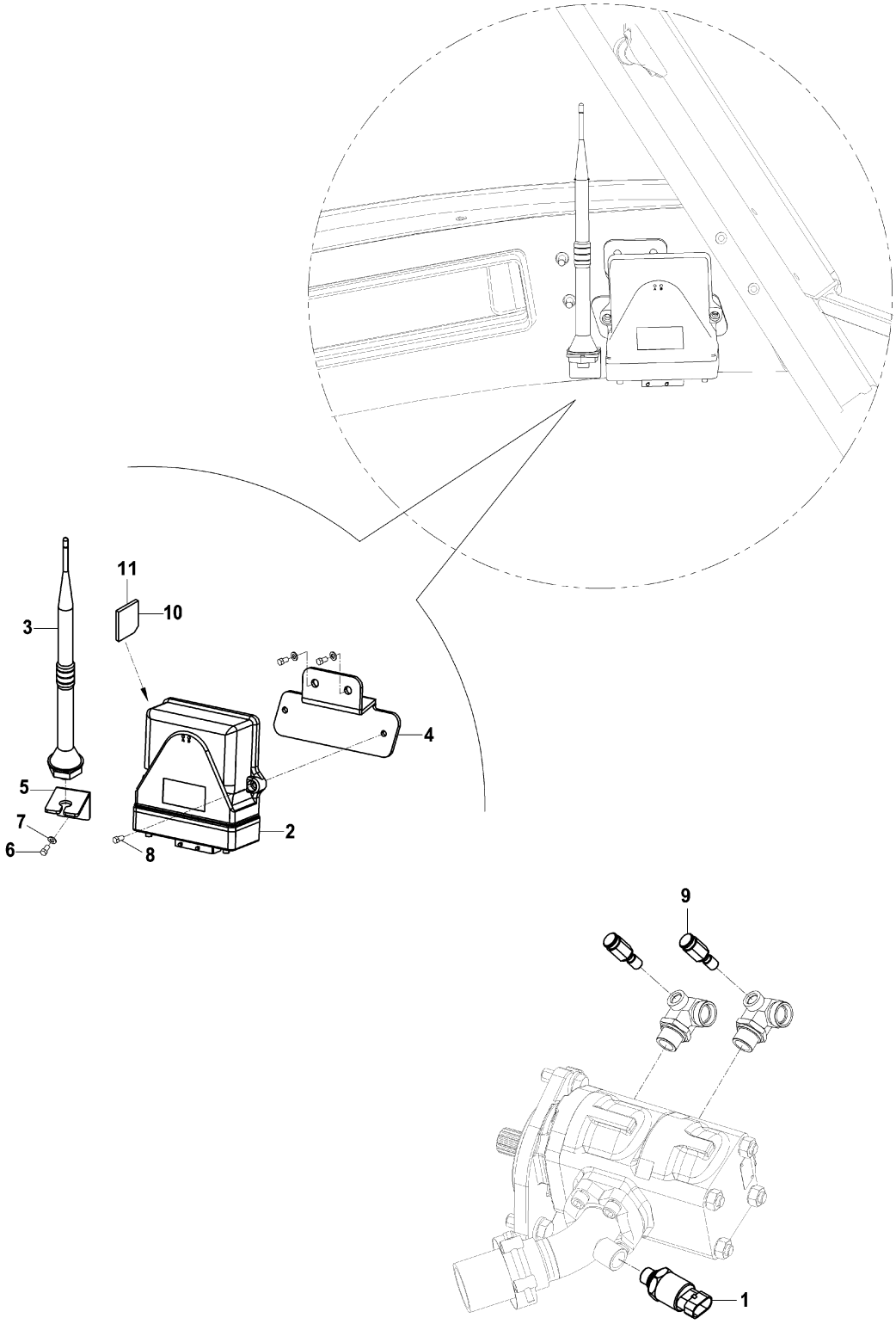

ETİKET VE LEVHALAR (1)
DECAL AND PLATES (1)

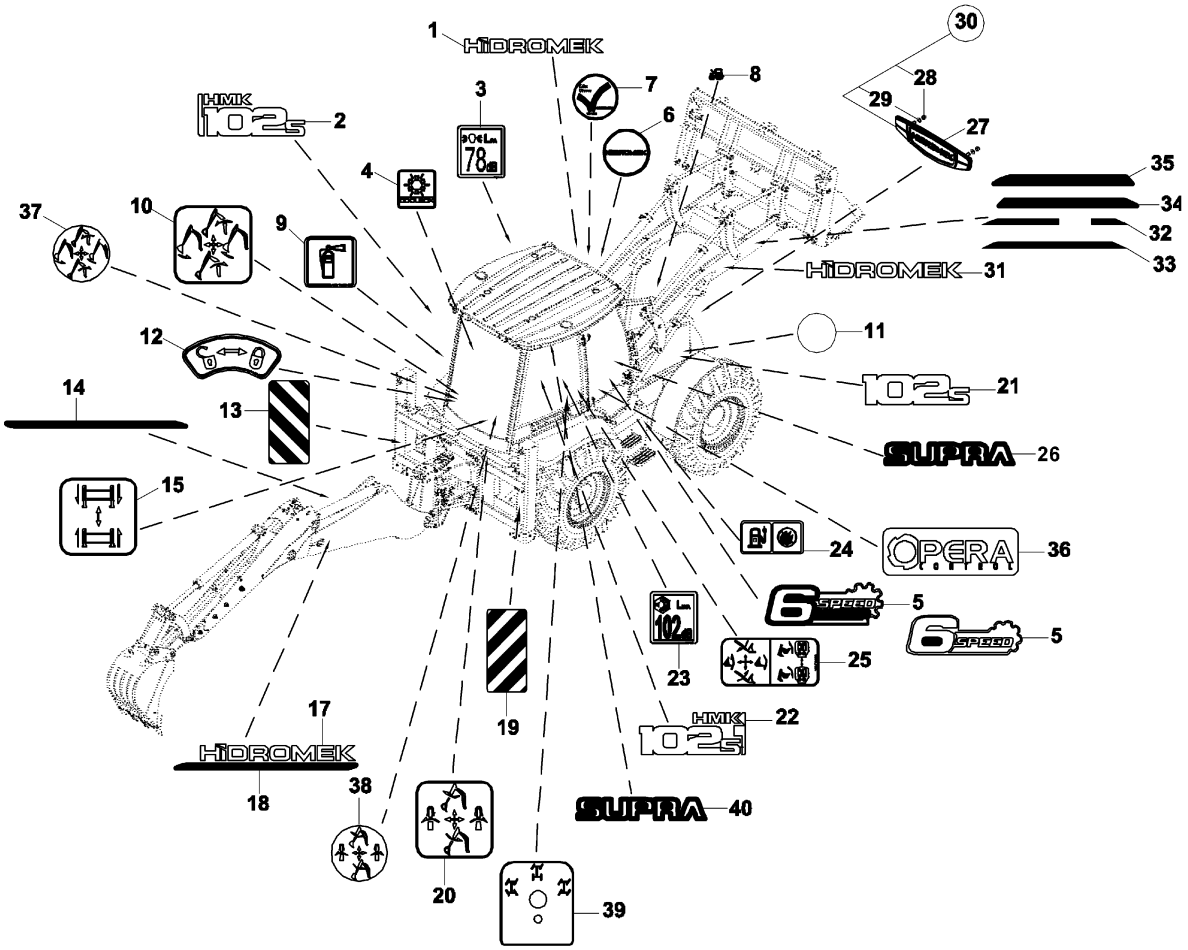

ETİKET VE LEVHALAR, TR (2)
DECAL AND PLATES, TR (2)

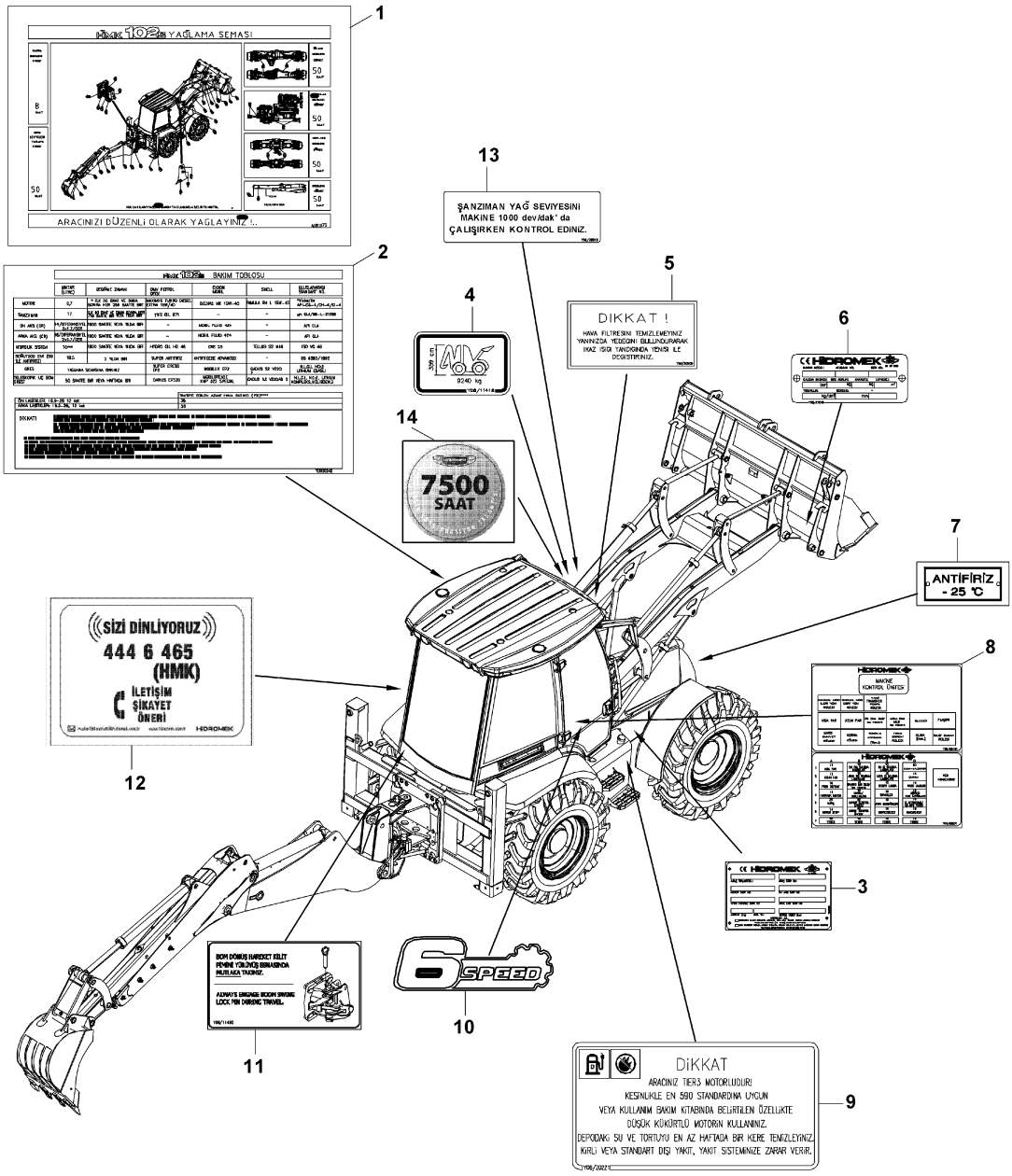

ETİKET VE LEVHALAR, EN (2)
DECAL AND PLATES, EN (2)

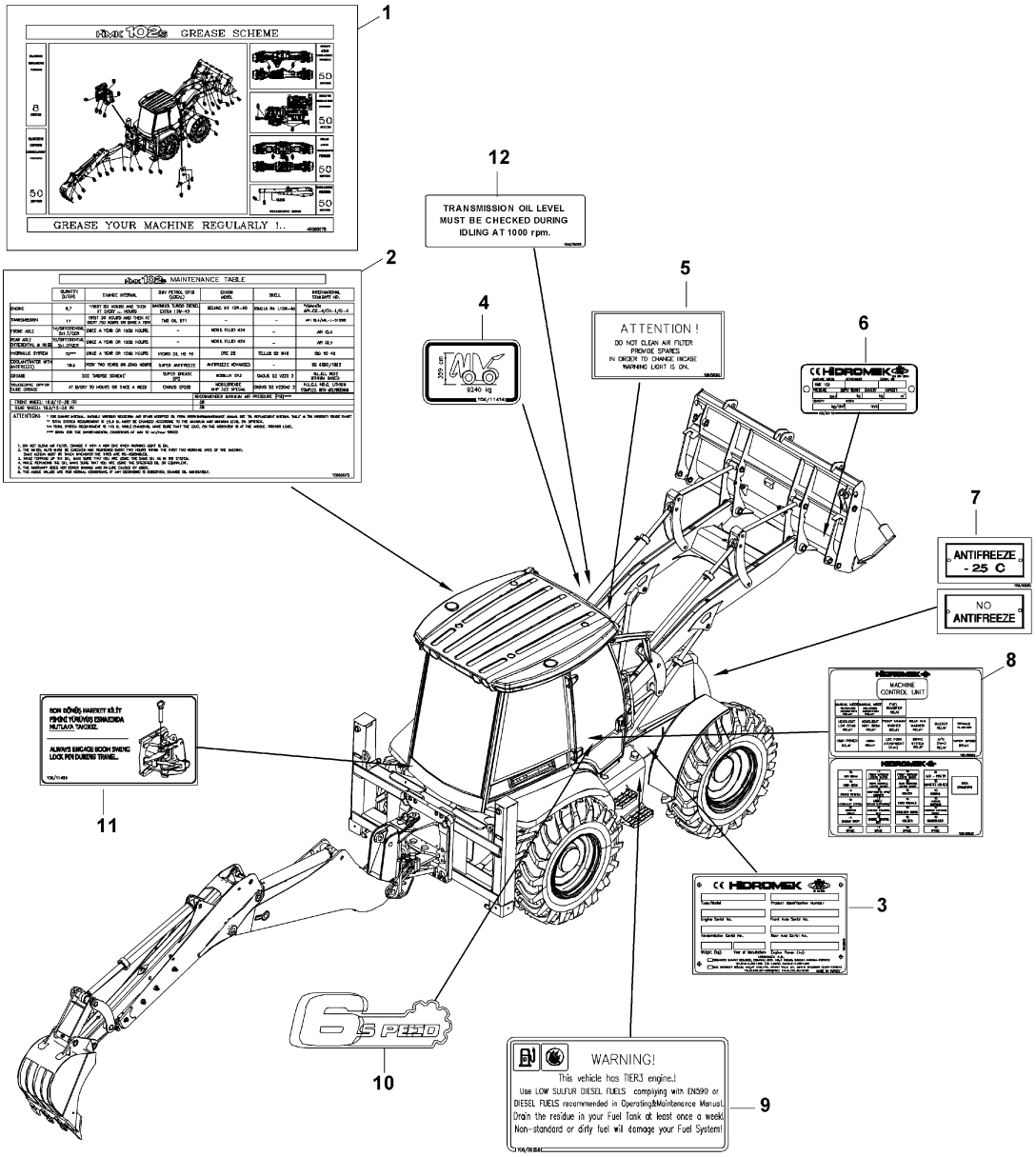

ETİKET VE LEVHALAR, FR (2)
DECAL AND PLATES, FR (2)

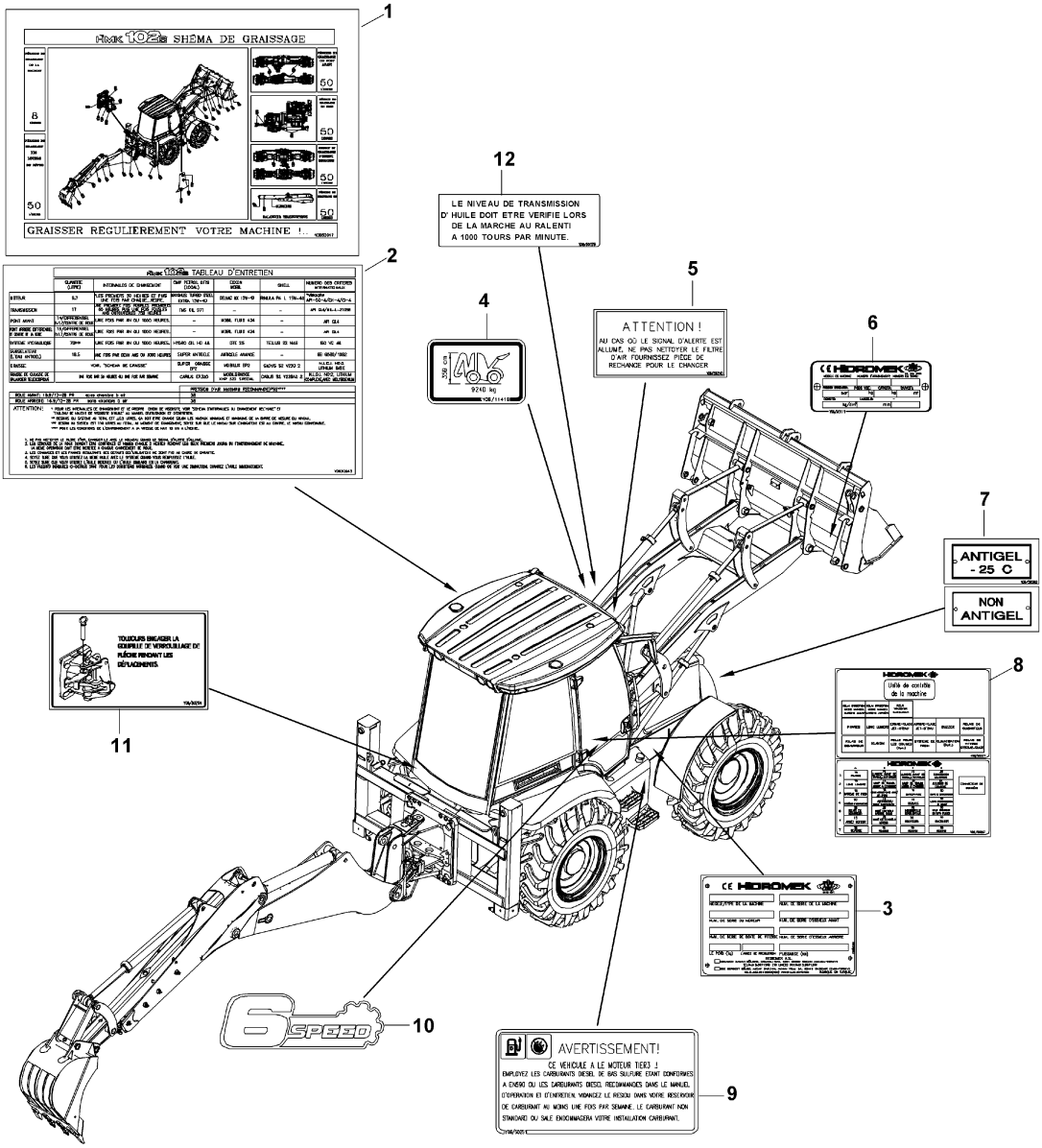

ETİKET VE LEVHALAR, ISP (2)
DECAL AND PLATES (2)

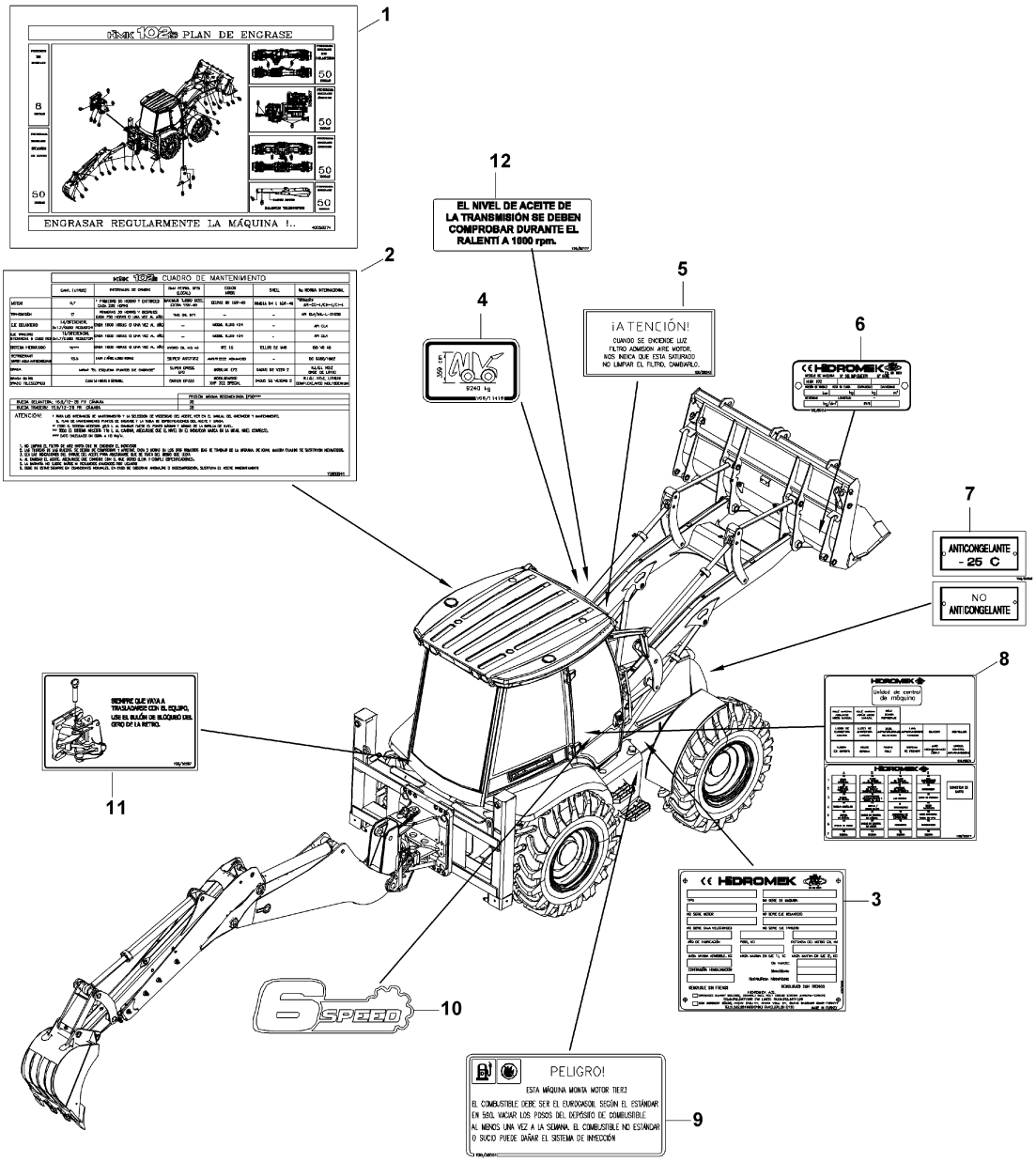

ETİKET VE LEVHALAR, RUS (2)
DECAL AND PLATES, RUS (2)

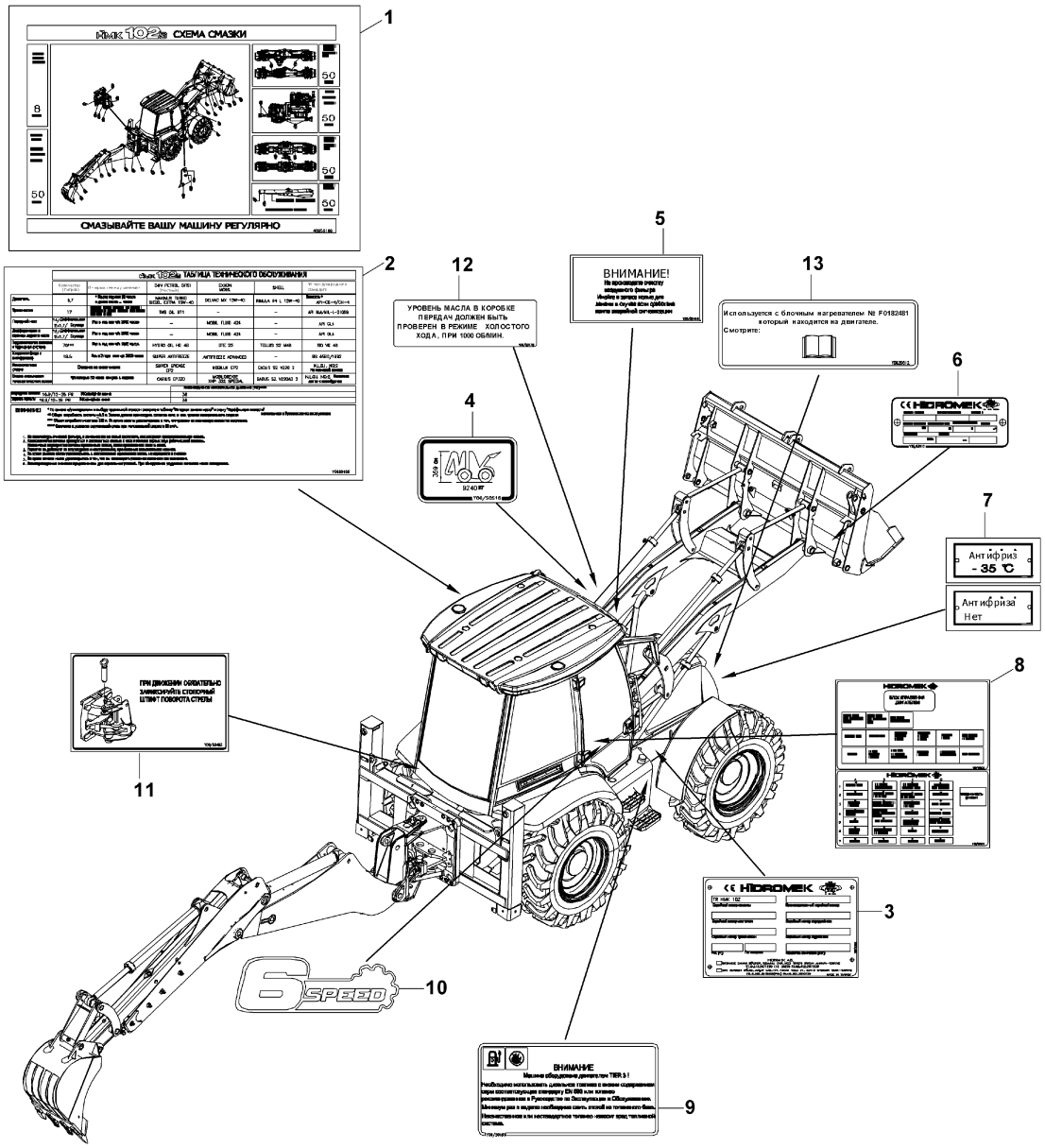

ETİKET VE LEVHALAR, POR (2)
DECAL AND PLATES, POR (2)

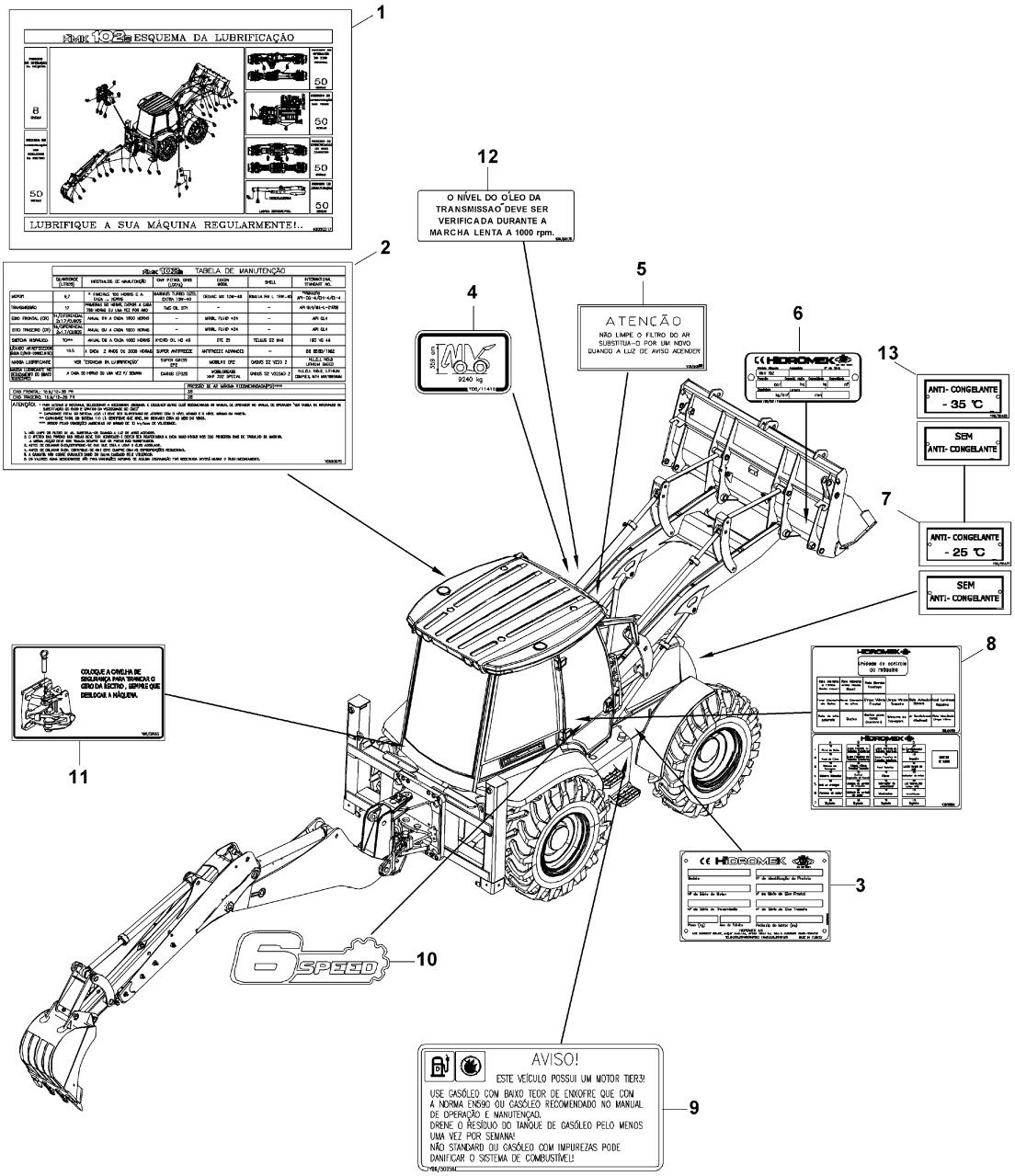

ETİKET VE LEVHALAR, BUL (2)
DECAL AND PLATES, BUL (2)

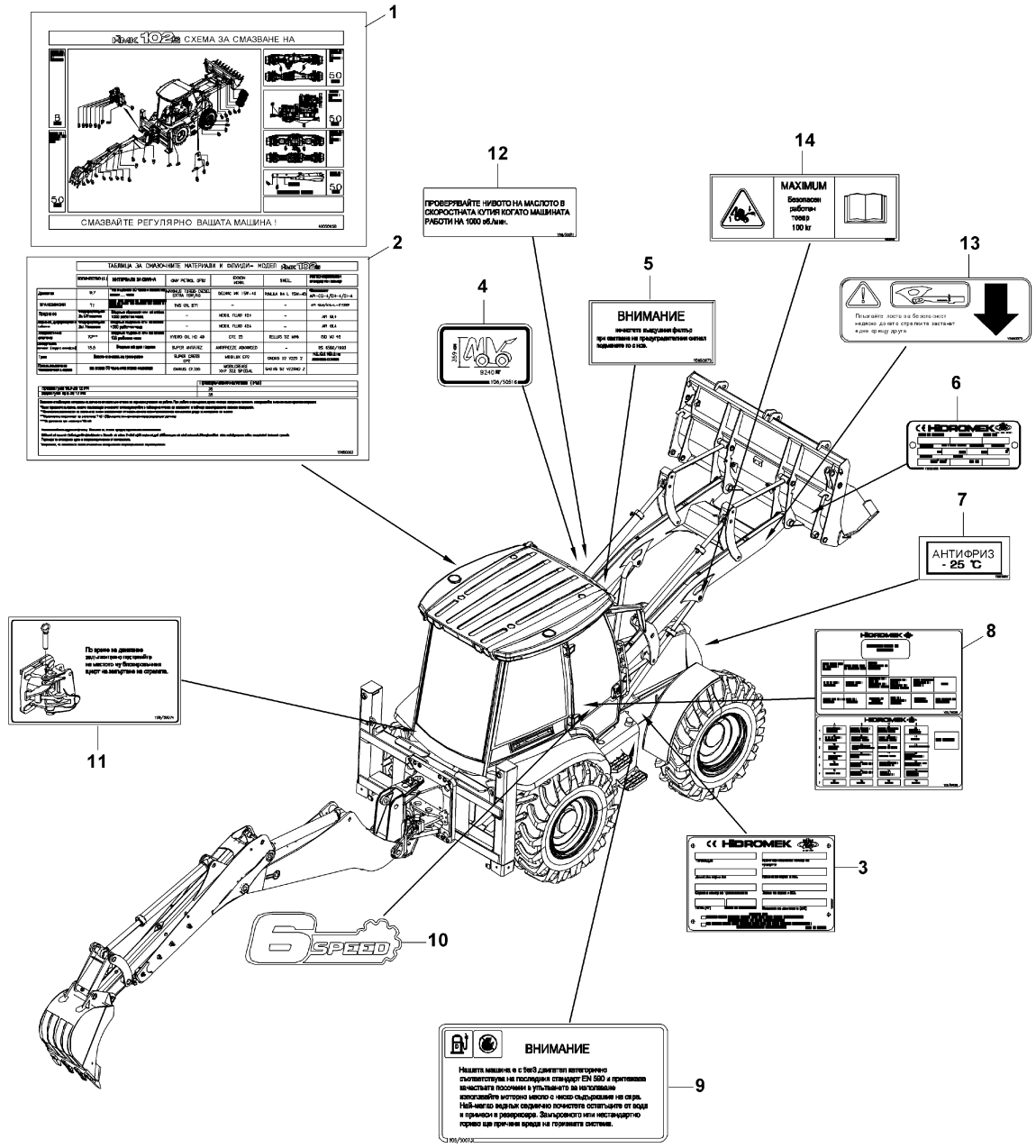

ETİKET VE LEVHALAR, KIRICI
DECAL AND PLATES, BREAKER

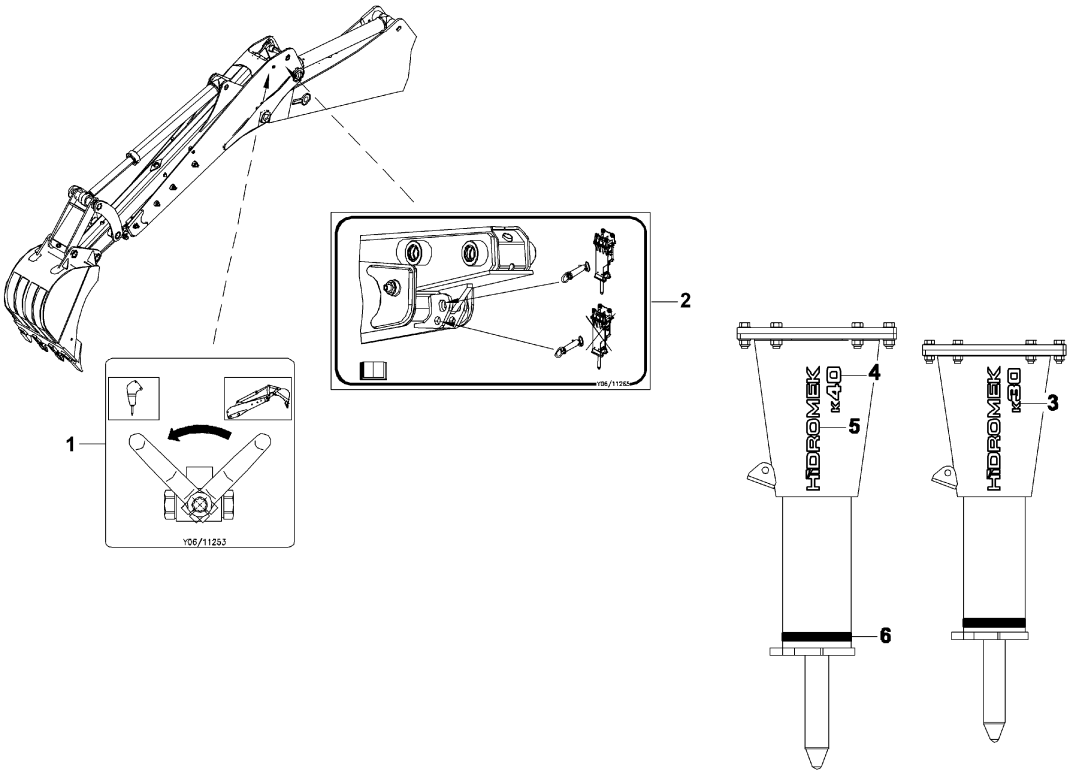

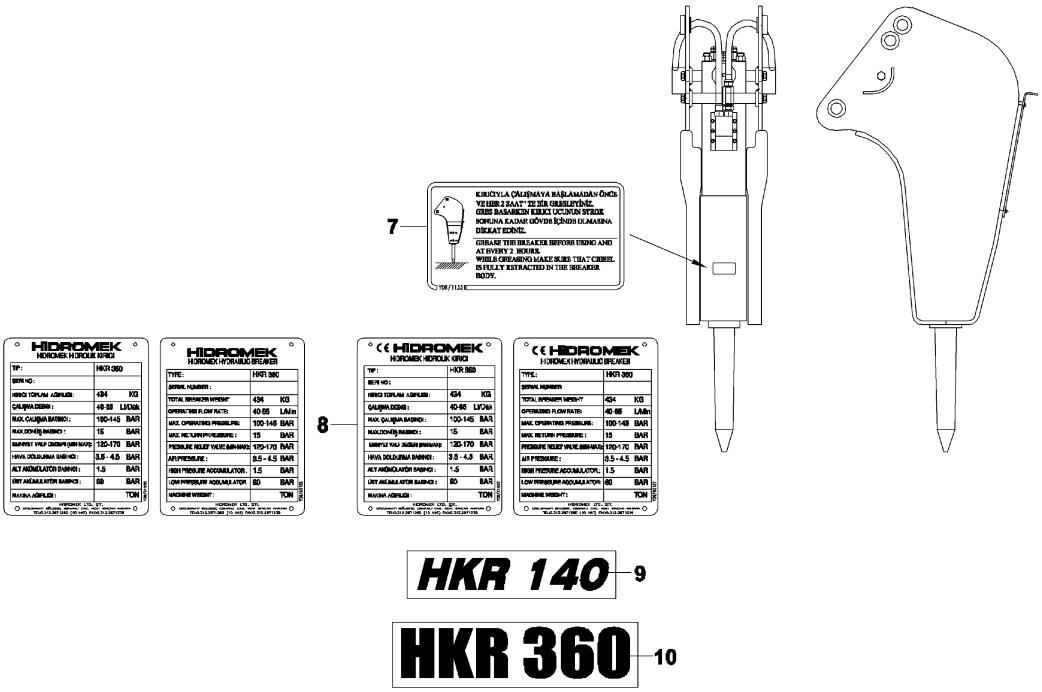

HKR 140 9

HKR 360 10

AVADANLIK TAKIMI
TOOL KIT

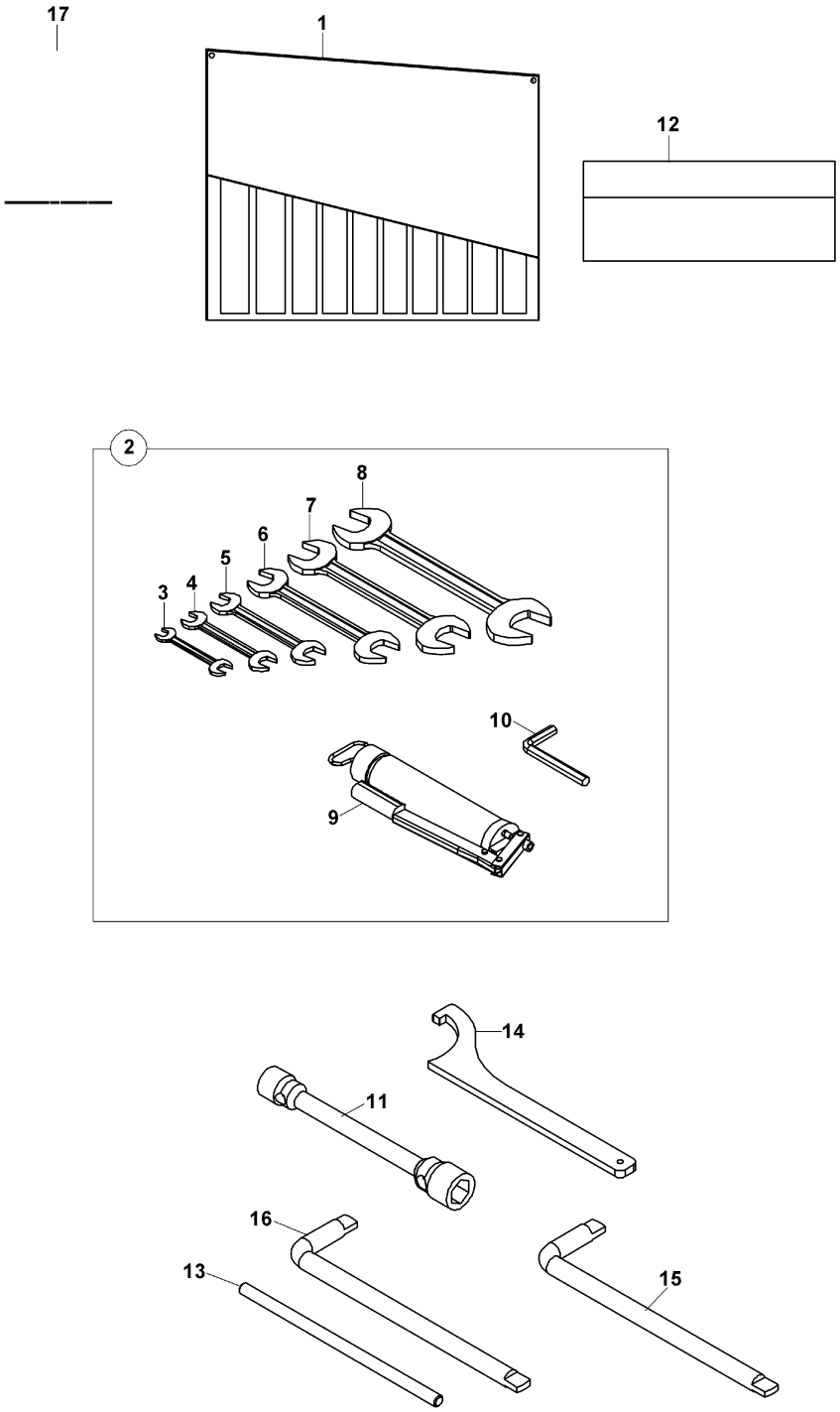

MOTOR, PERKINS 1104D-44TA
ENGINE, PERKINS 1104D-44TA

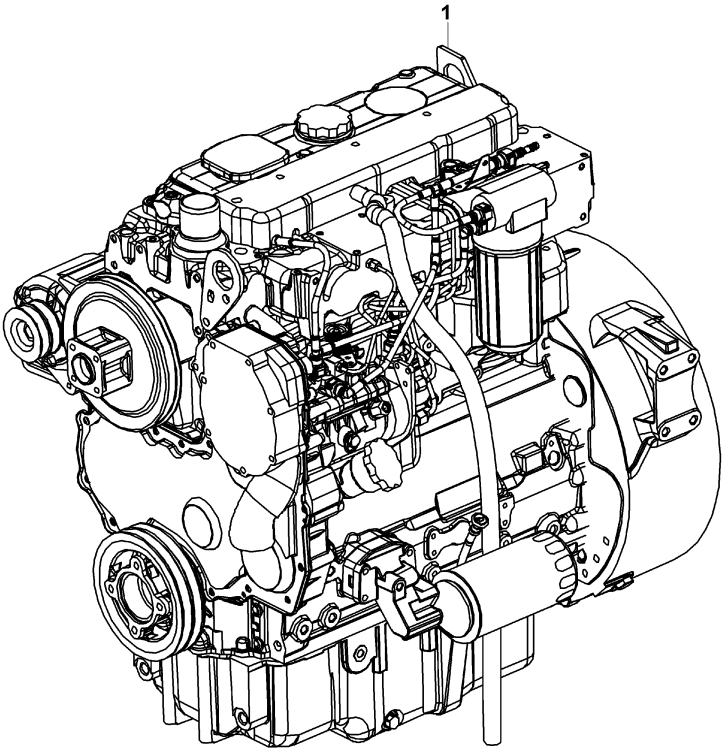

KÜLBÜTÖR KAPAĞI
CYLINDER HEAD COVER

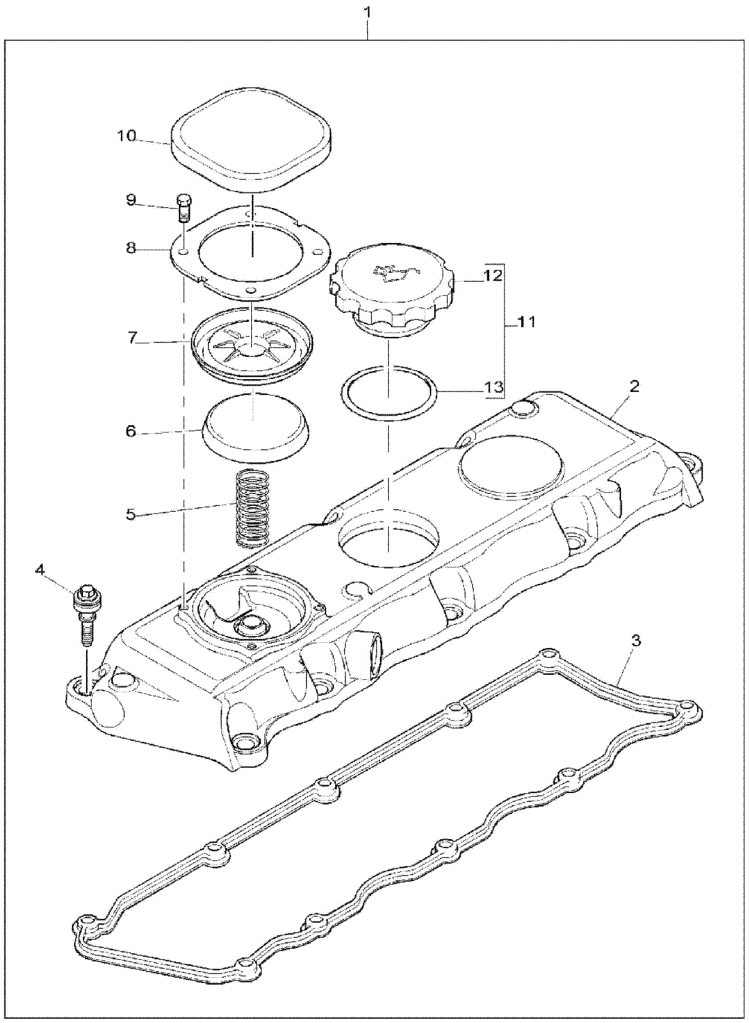

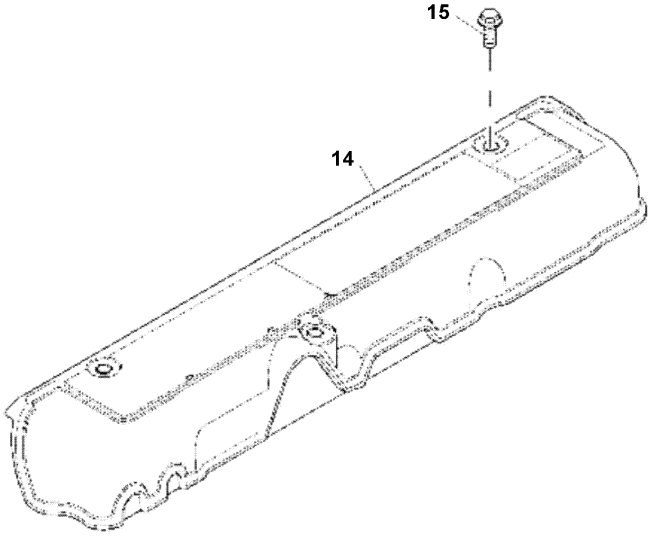

KAM MİLİ
CAM SHAFT

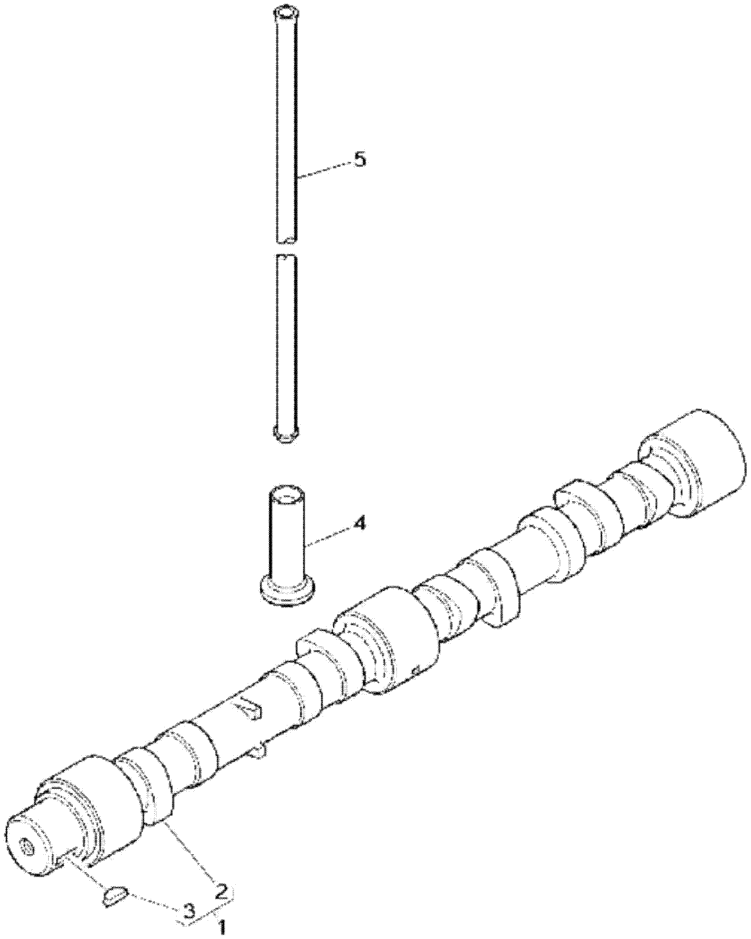

KÜLBÜTÖR
ROCKER ASSEMBLY

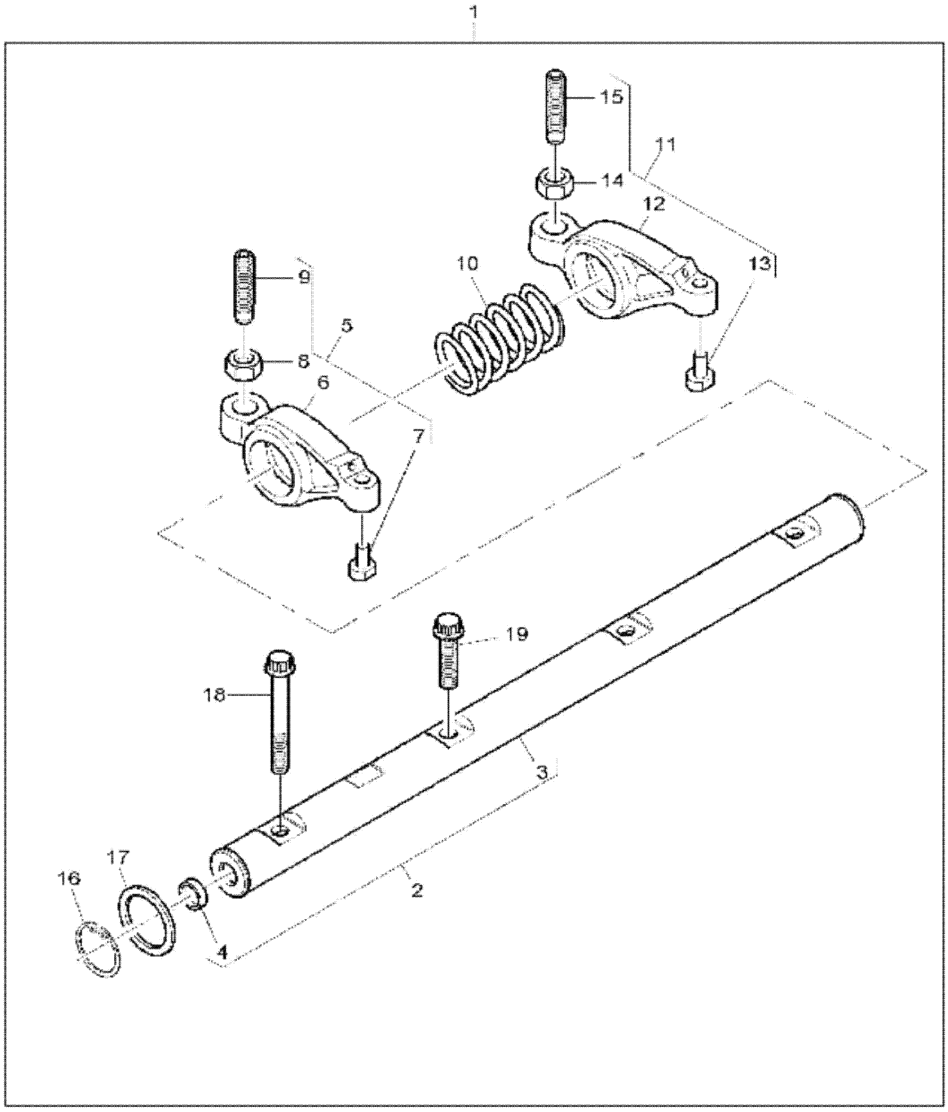

PİSTON VE SEGMANLAR
PISTONS & RINGS

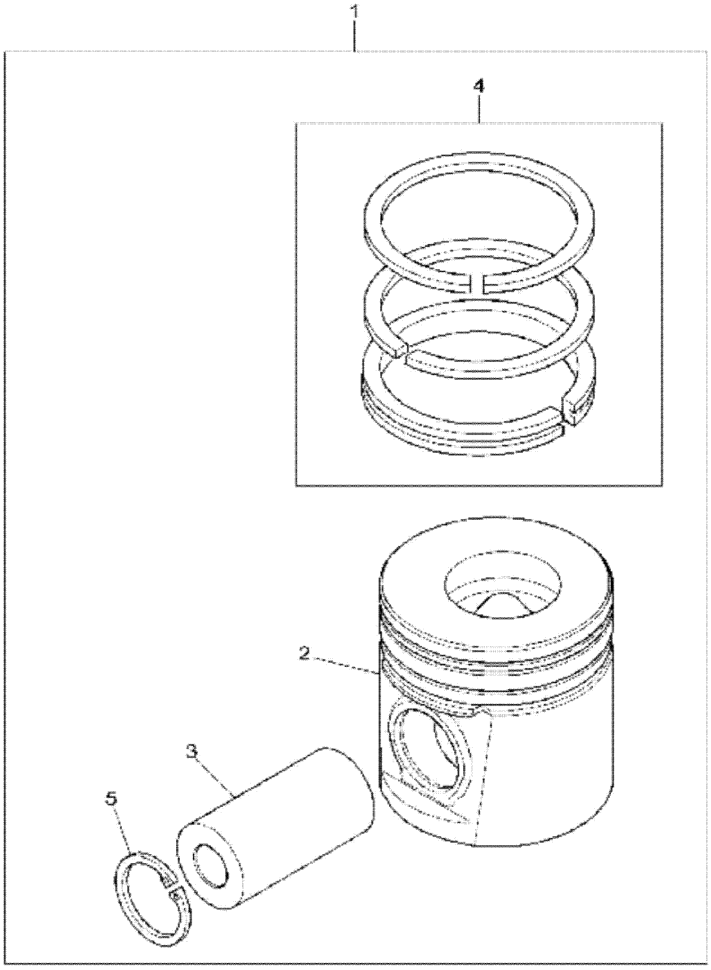

VOLAN
FLYWHEEL

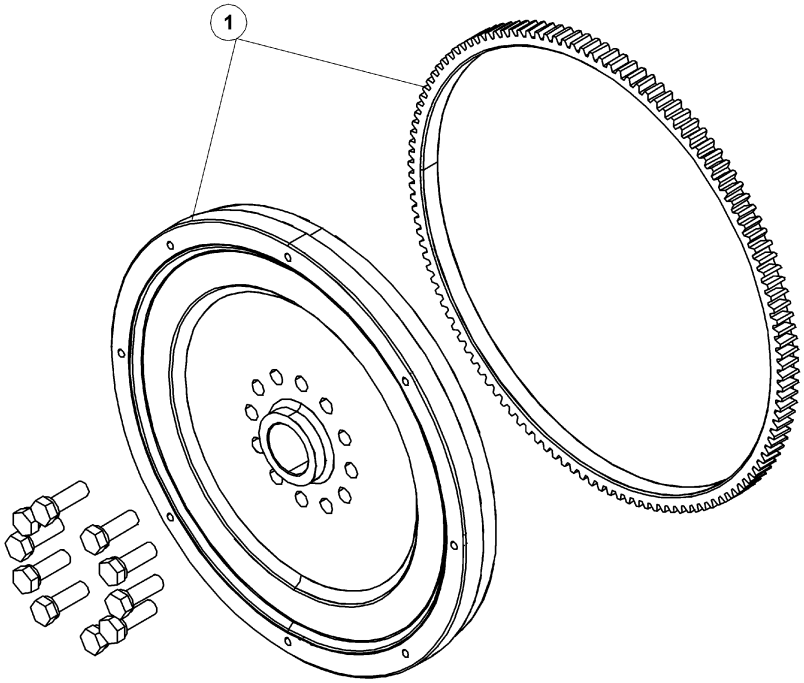

VOLAN MUHAFAZASI
FLYWHEEL HOUSING

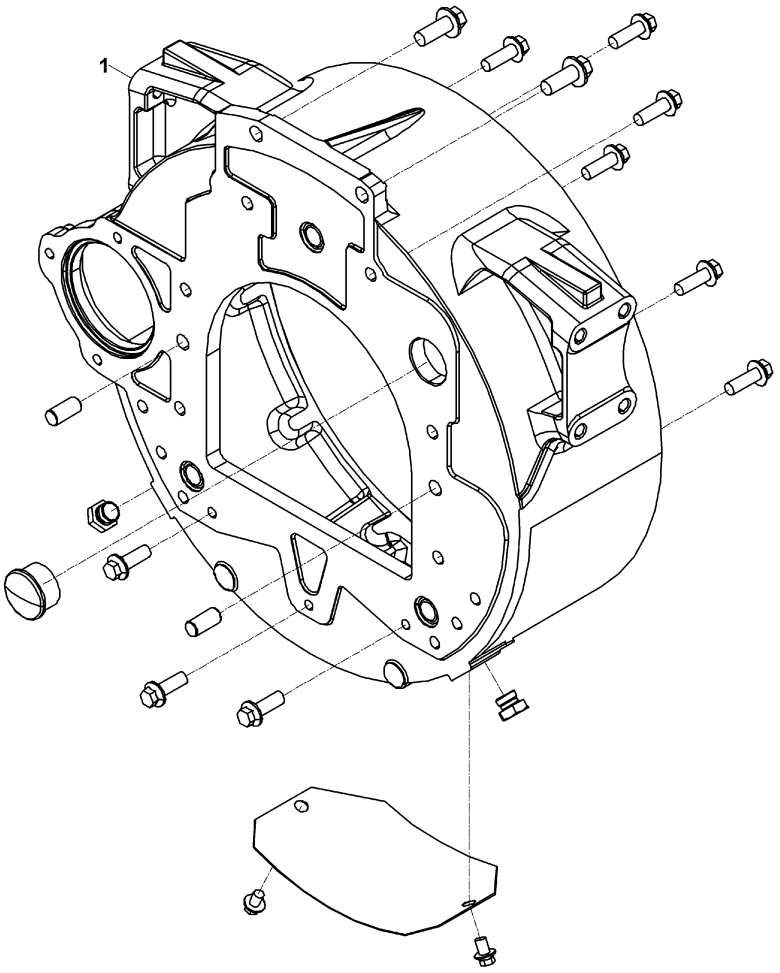

KRANKMİLİ & ANA VE GEZİNTİ YATAKLARI
CRANKSHAFT MAIN & BIG END BEARINGS

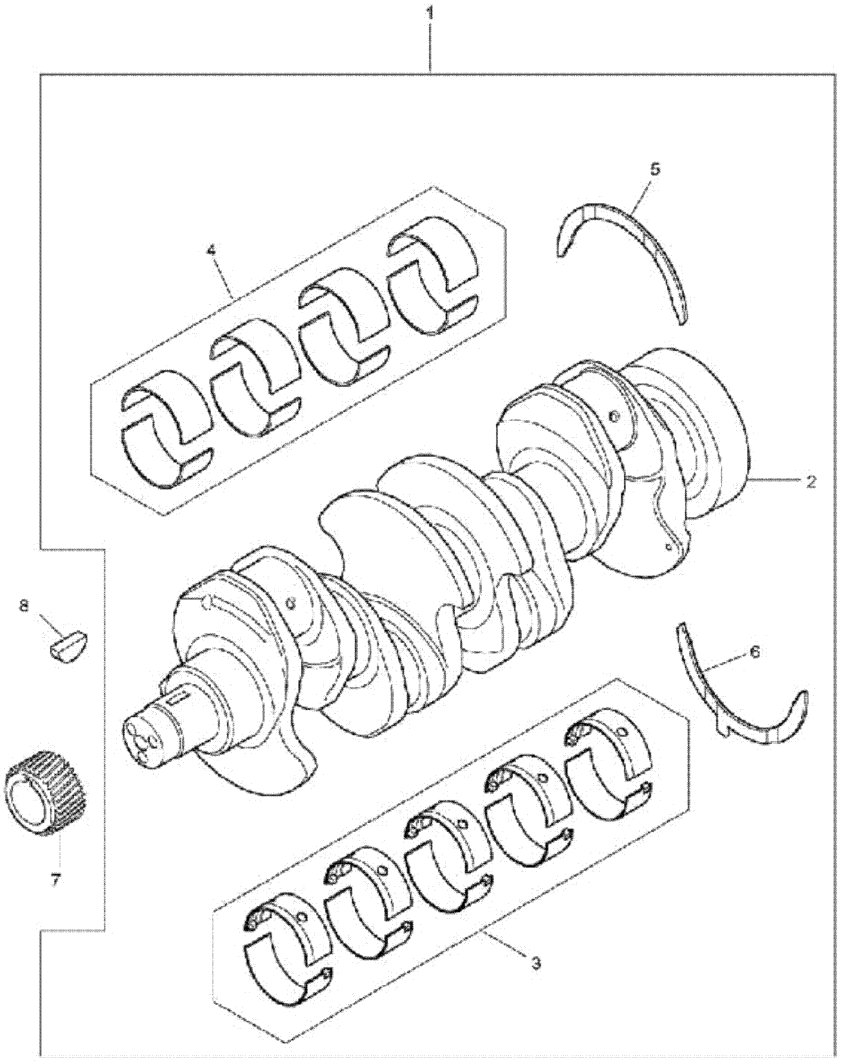

SİLİNDİR KAPAĞI
CYLINDER HEAD ASSY

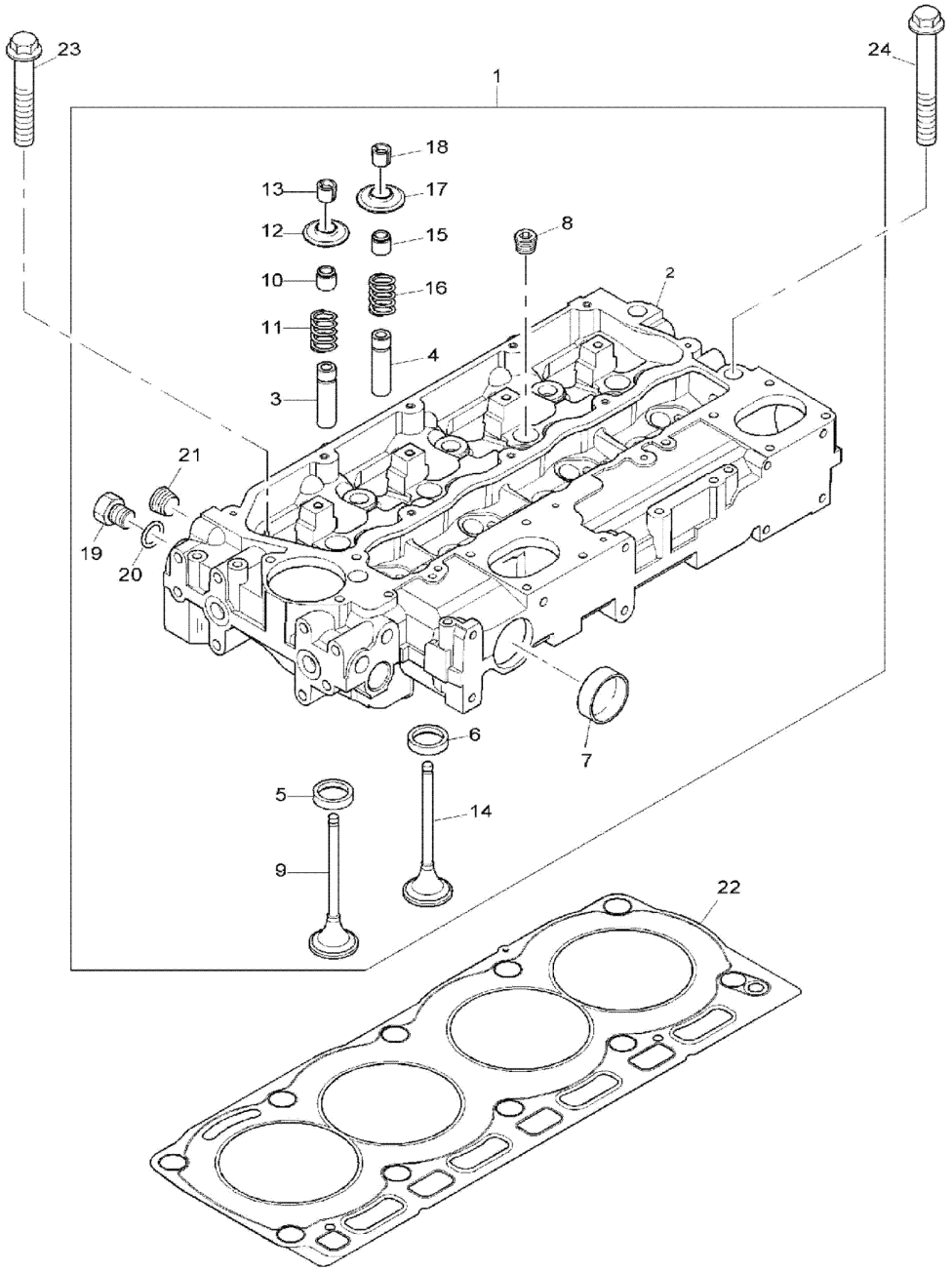

SİLİNDİR BLOĞU VE GÖMLEĞİ
CYLINDER BLOCK &LINERS

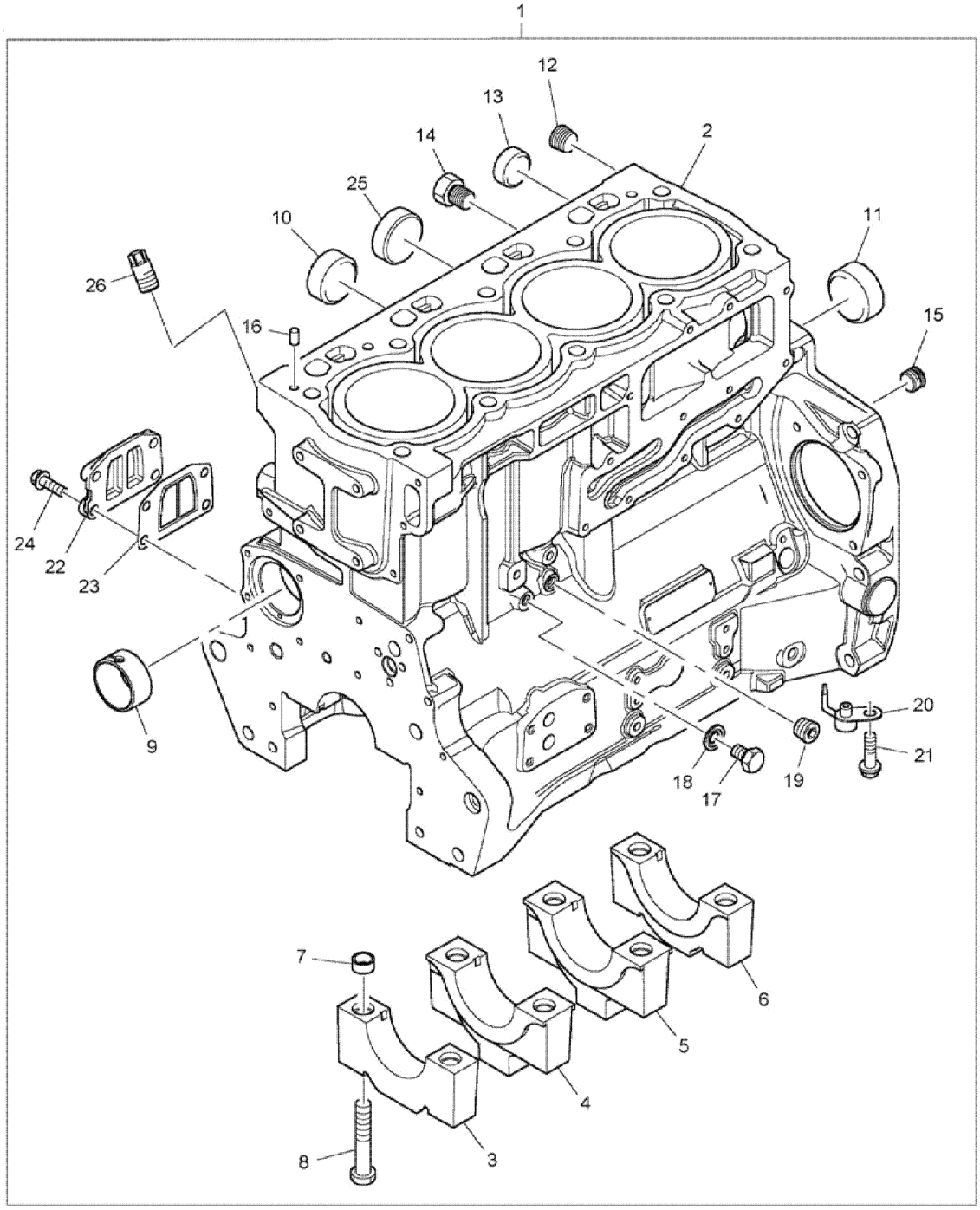

BİYEL KOLU
CONNECTING RODS

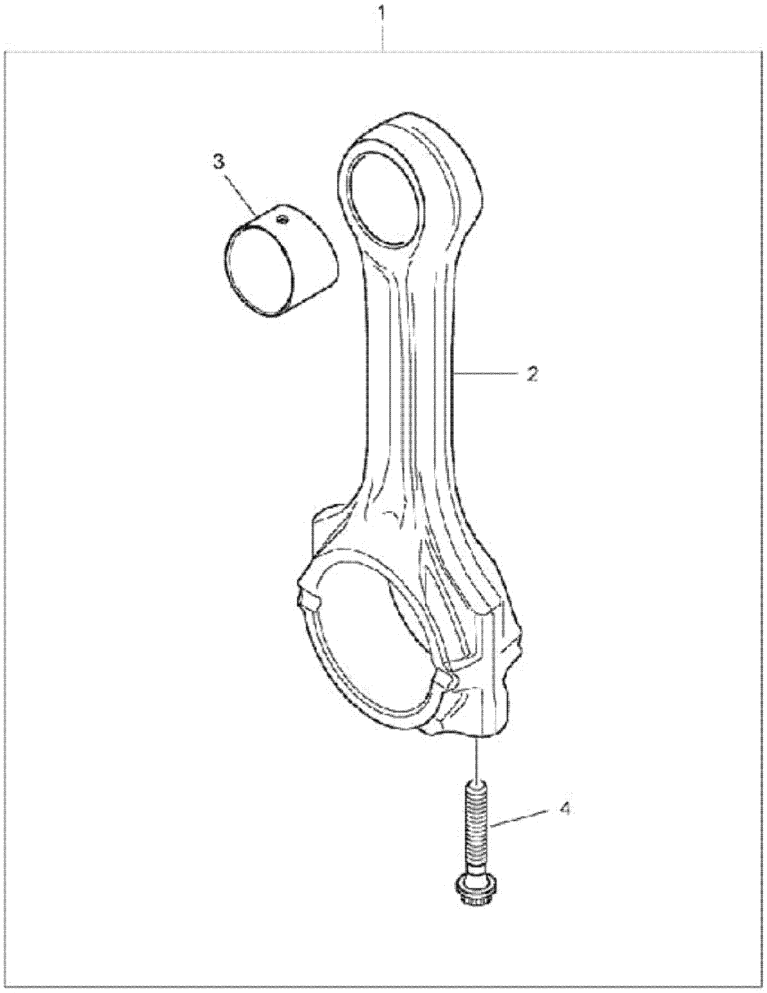

KRANK ARKA KEÇE YUVASI
REAR END OIL SEAL

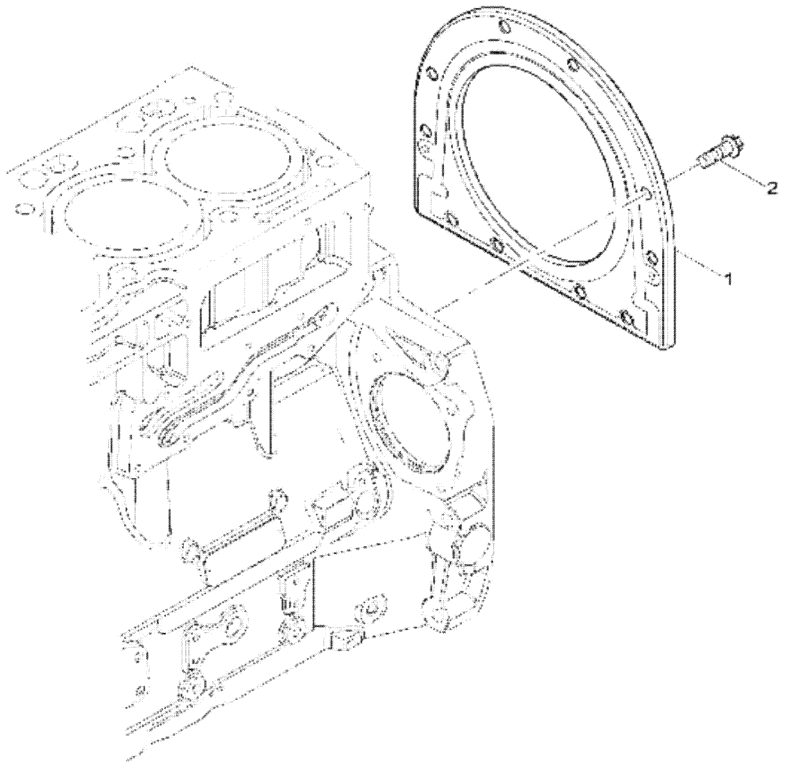

KÖR KAPAK
BLANKING PLATES

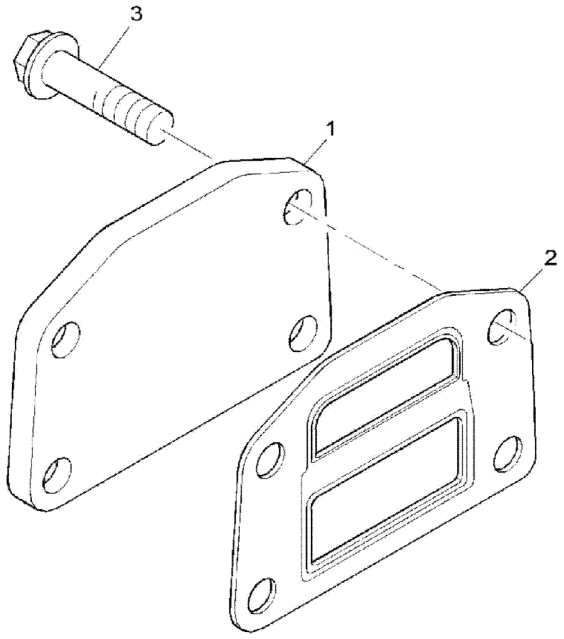

KRANK KASNAĞI
FRONT END DRIVE INPUT

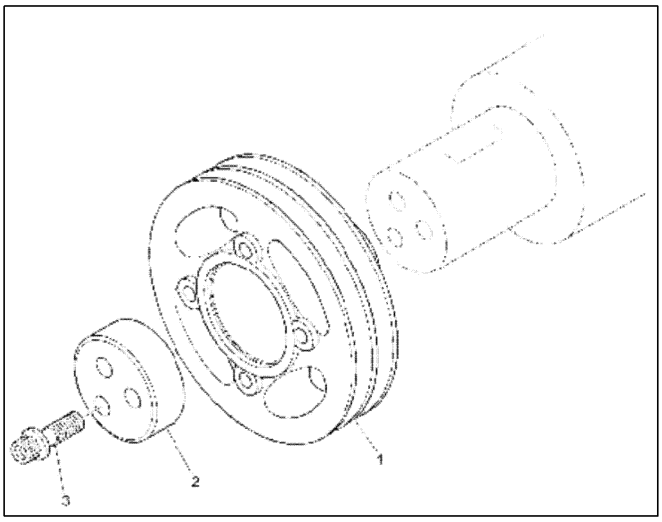

ZAMANLAMA DİŞLİSİ KAPAĞI (1)
TIMING CASE (1)

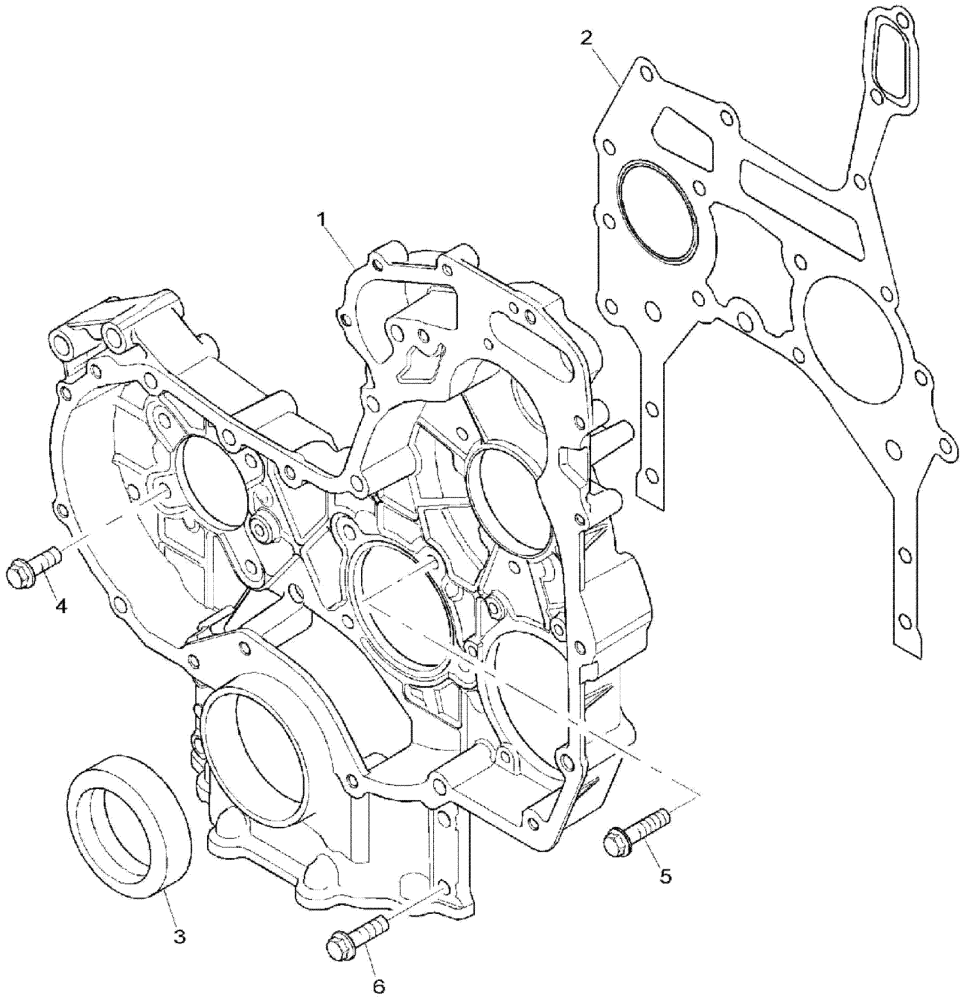

ZAMANLAMA DİŞLİSİ KAPAĞI (2)
TIMING CASE (2)

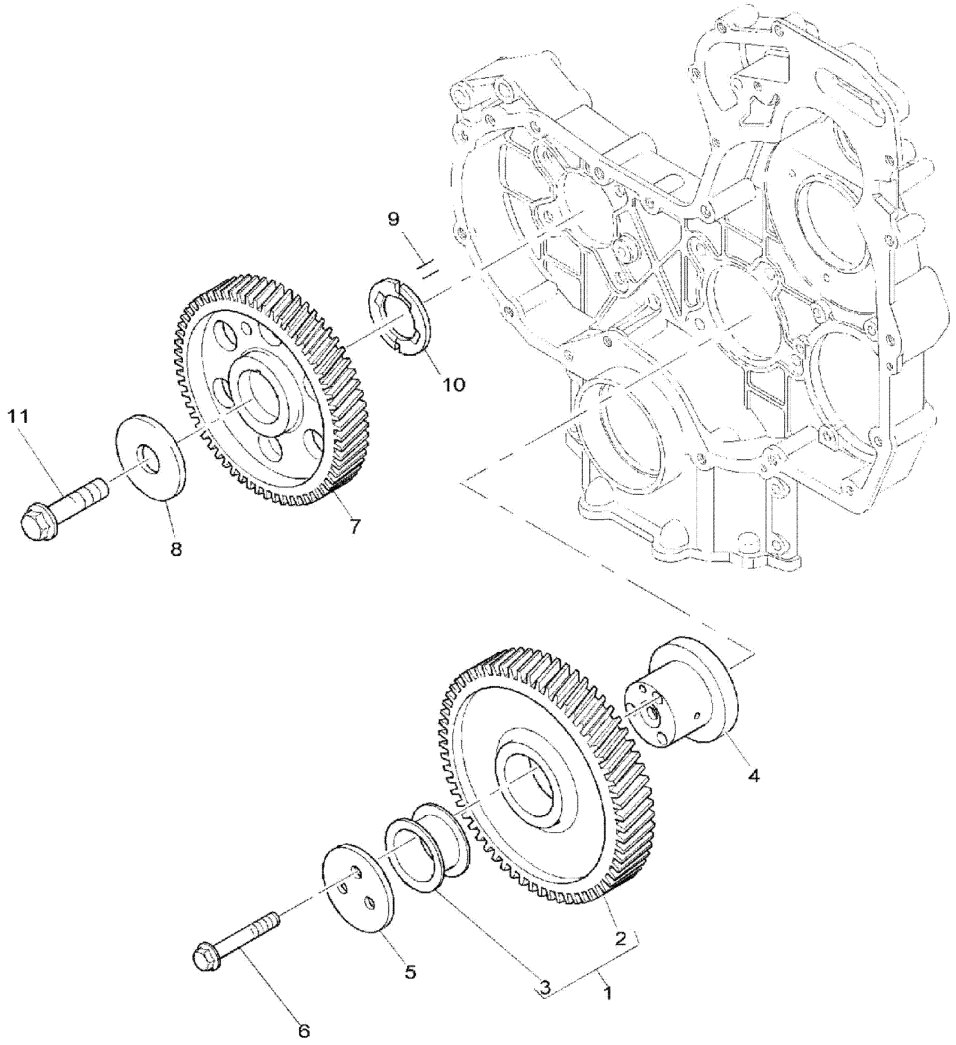

ZAMANLAMA DİŞLİSİ KAPAĞI (3)
TIMING COVER (3)

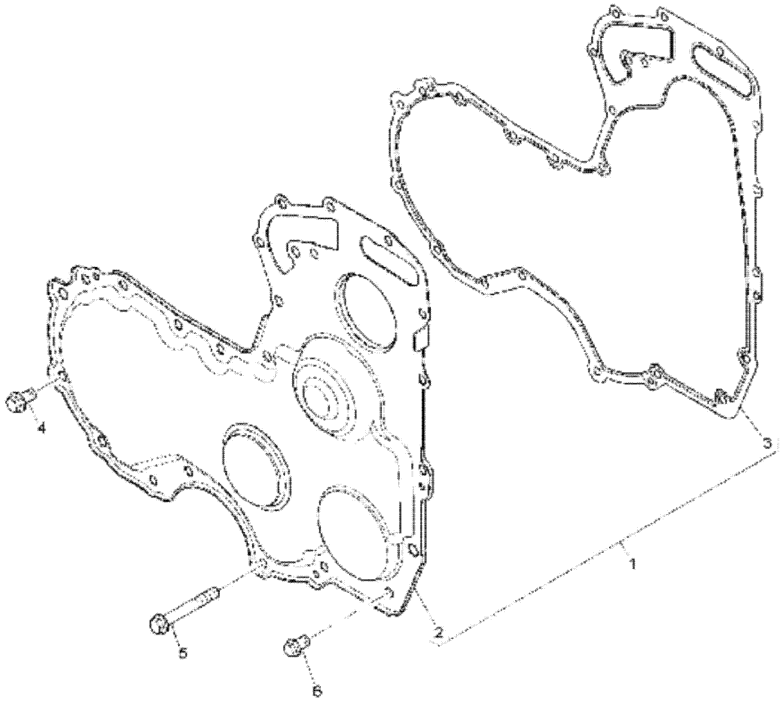

ADAPTÖR
DRIVE ADAPTOR

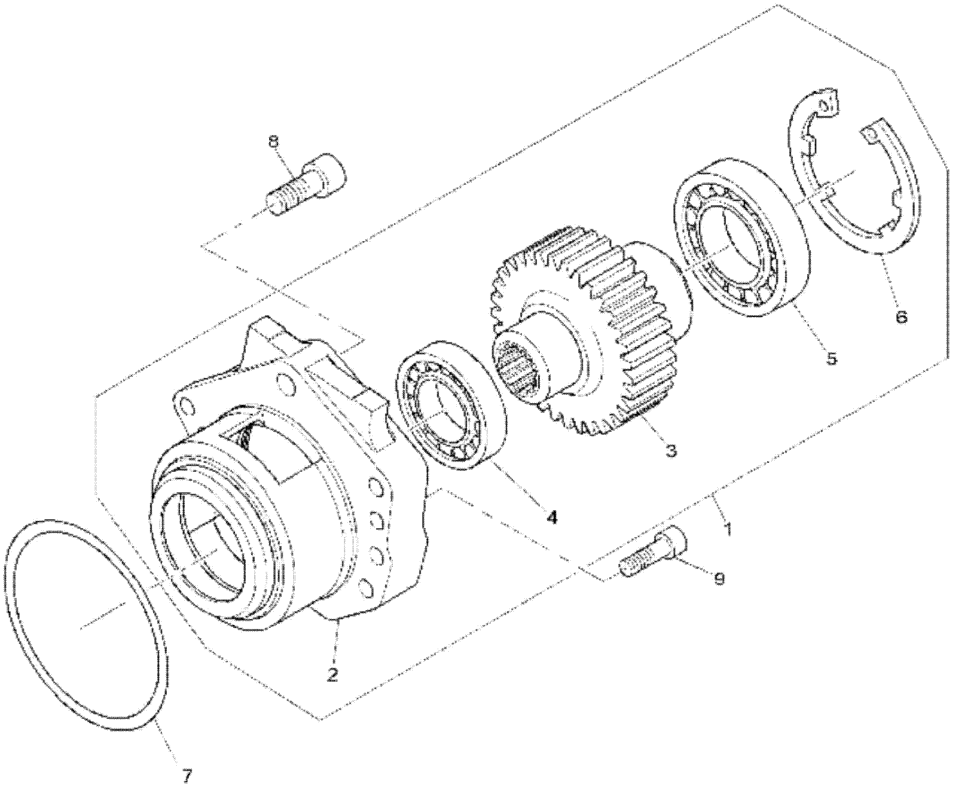

TAPA
BLANKING PLUGS

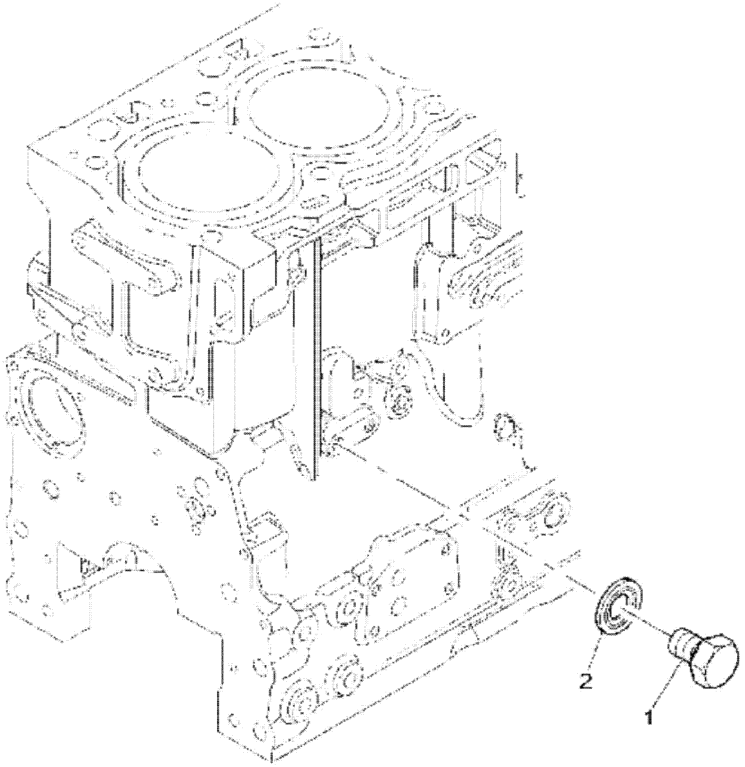

KÖR KAPAK
BLANKING PLATES

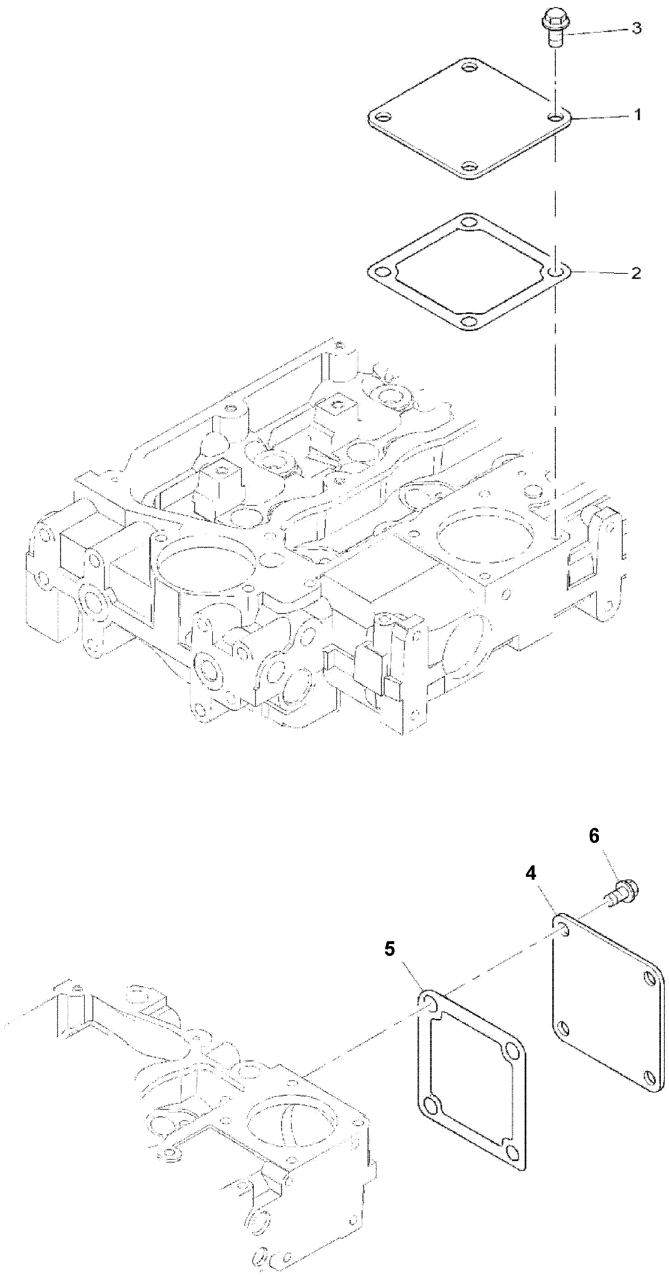

MOTOR KALDIRMA KULAKLARI
ENGINE LIFTING EYES

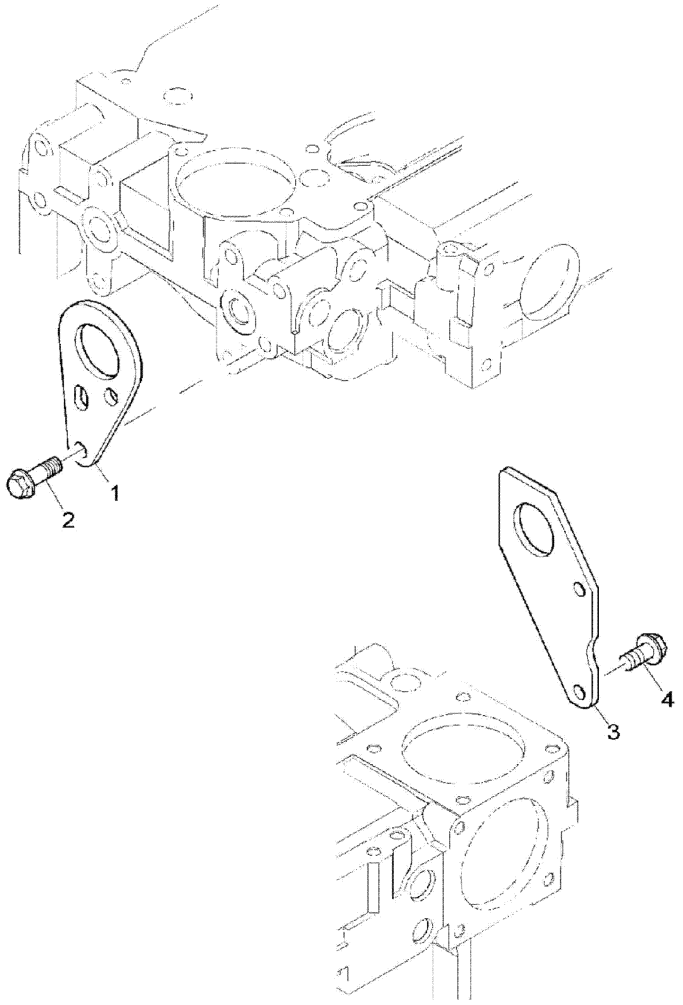

YARDIMCI DONANIMLAR
MISCALLANEOUS & AUXILIARIES

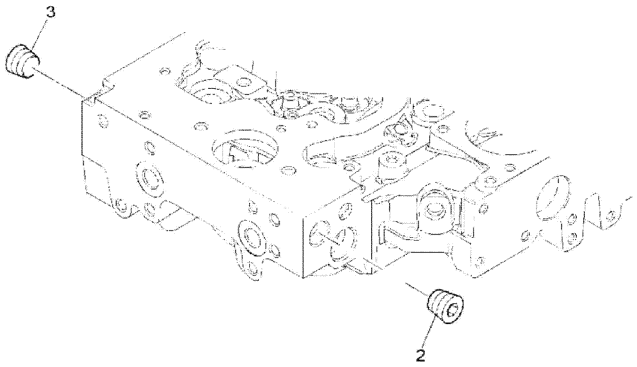

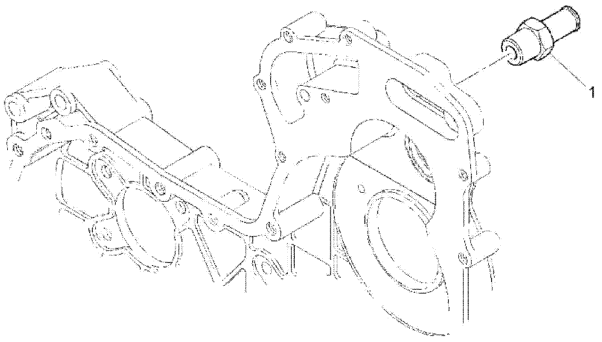

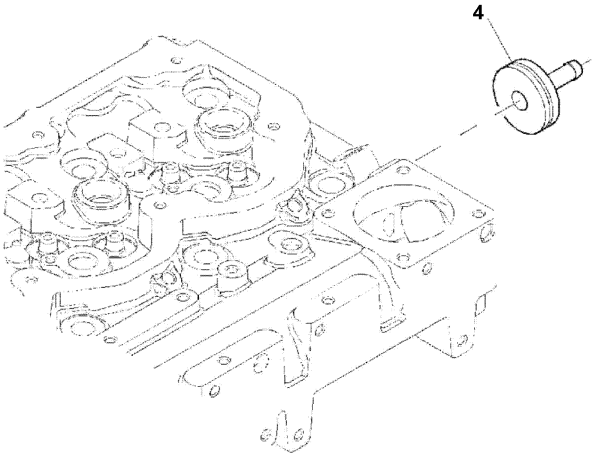

KÖR KAPAK
BLANKING PLATES

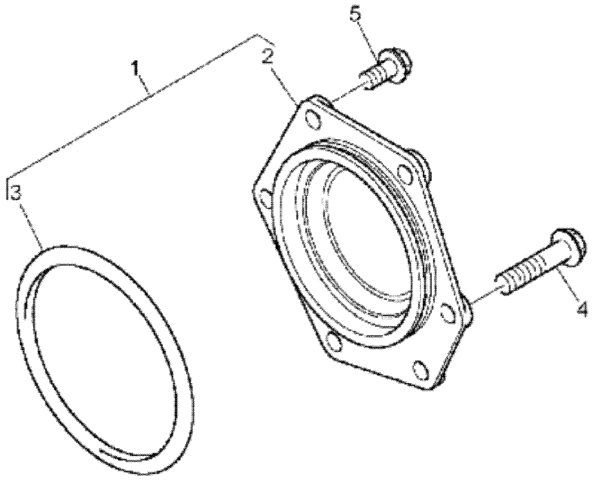

KARTER
SUMP

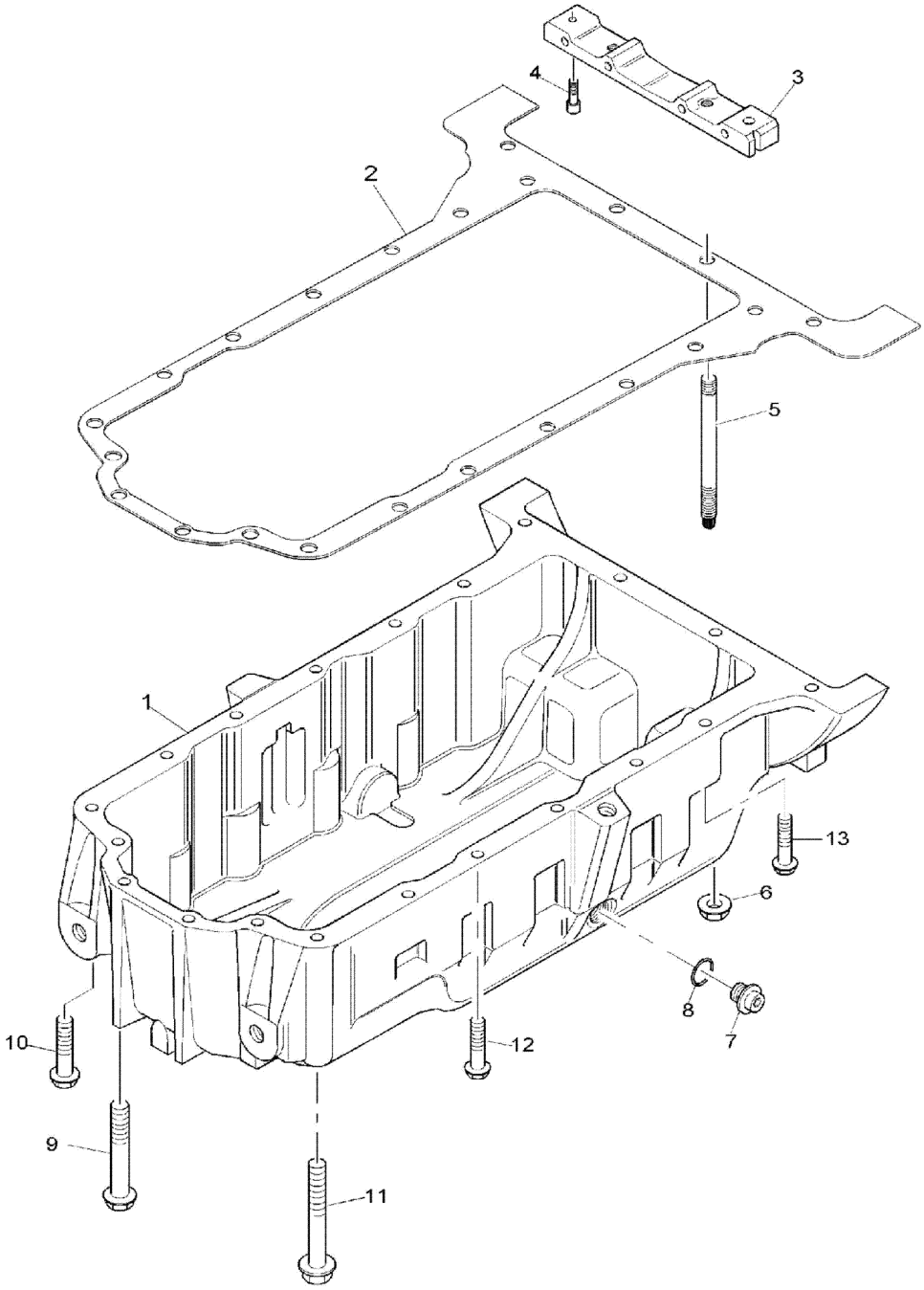

YAĞ KONTROL ÇUBUĞU BORUSU
DIPSTICK & FILLER TUBE

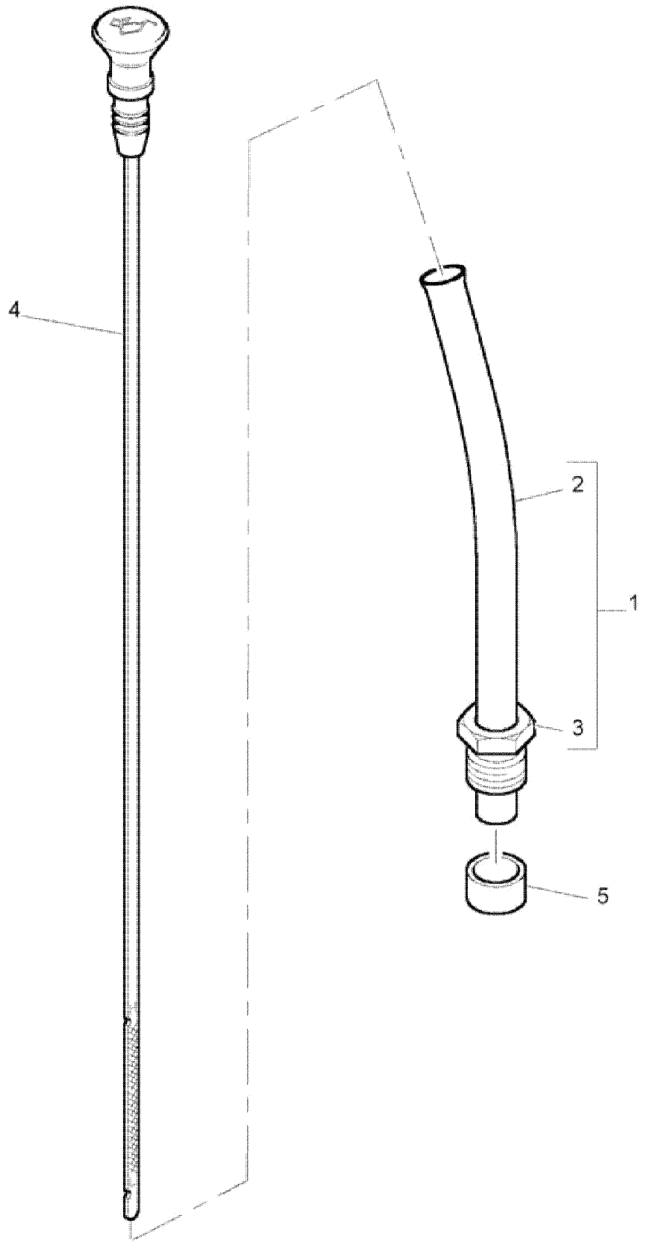

YAĞ EMİŞ BORUSU
OIL STRAINER

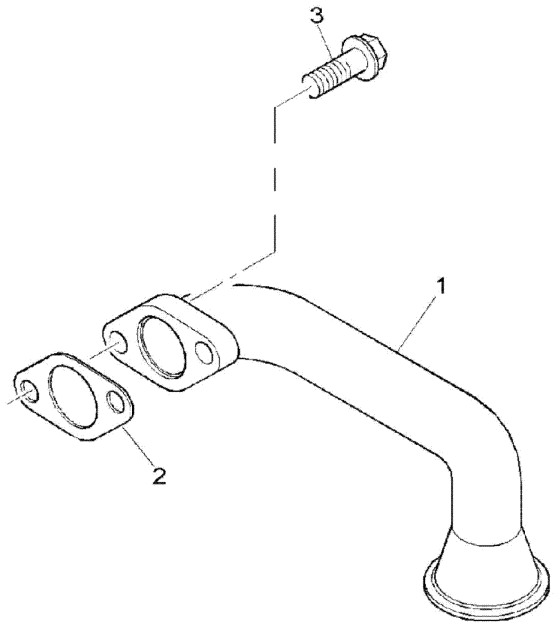

YAĞ DOLDURMA BORUSU
FILLER

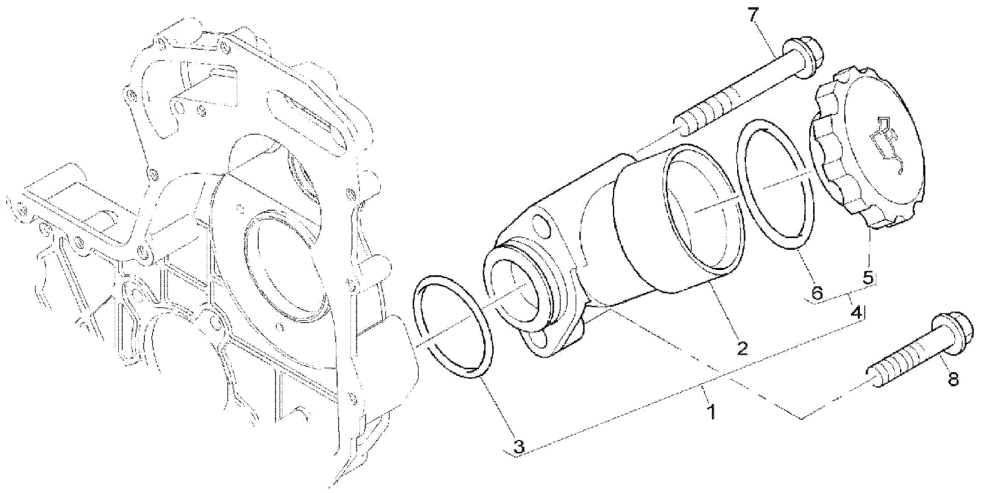

YAĞ SOĞUTUCU
OIL COOLER

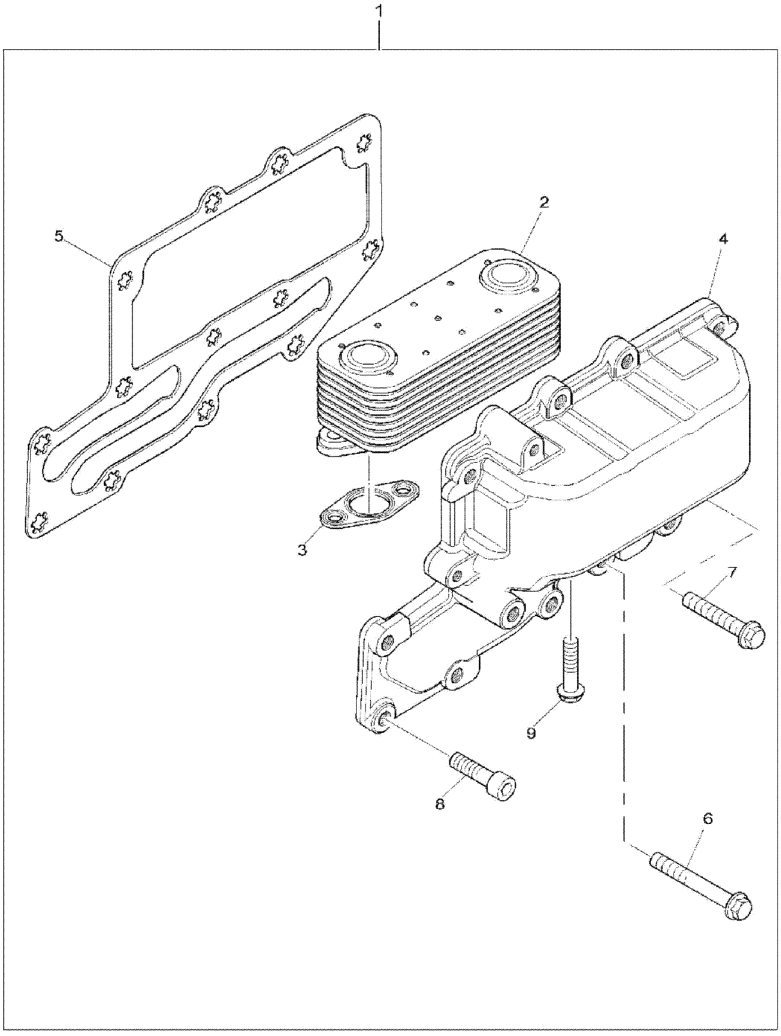

YAĞ FİLTRESİ
OIL FILTER

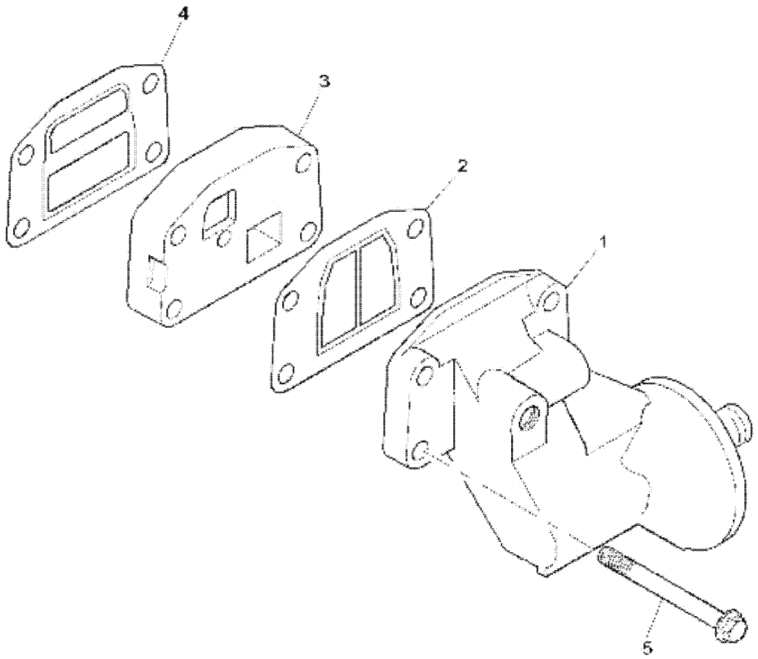

YAĞ FİLTRESİ
REMOTE LUBRICATING OIL FILTER

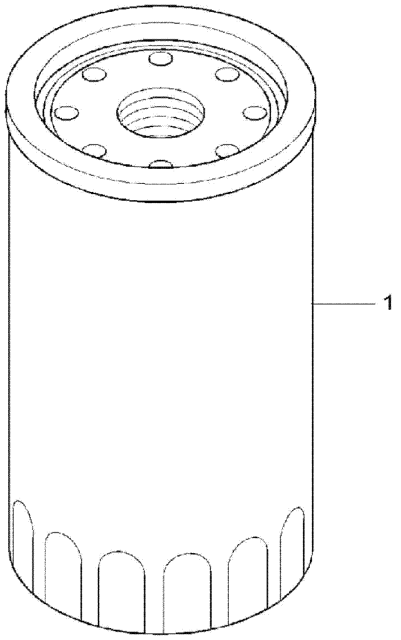

YAĞ POMPASI
LUBRICATING OIL PUMP & DELIVERY HOUSING

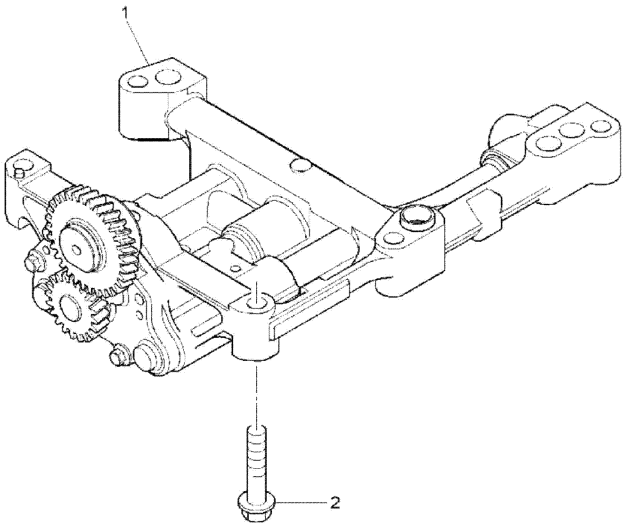

BESLEME BORUSU
FEED PIPES

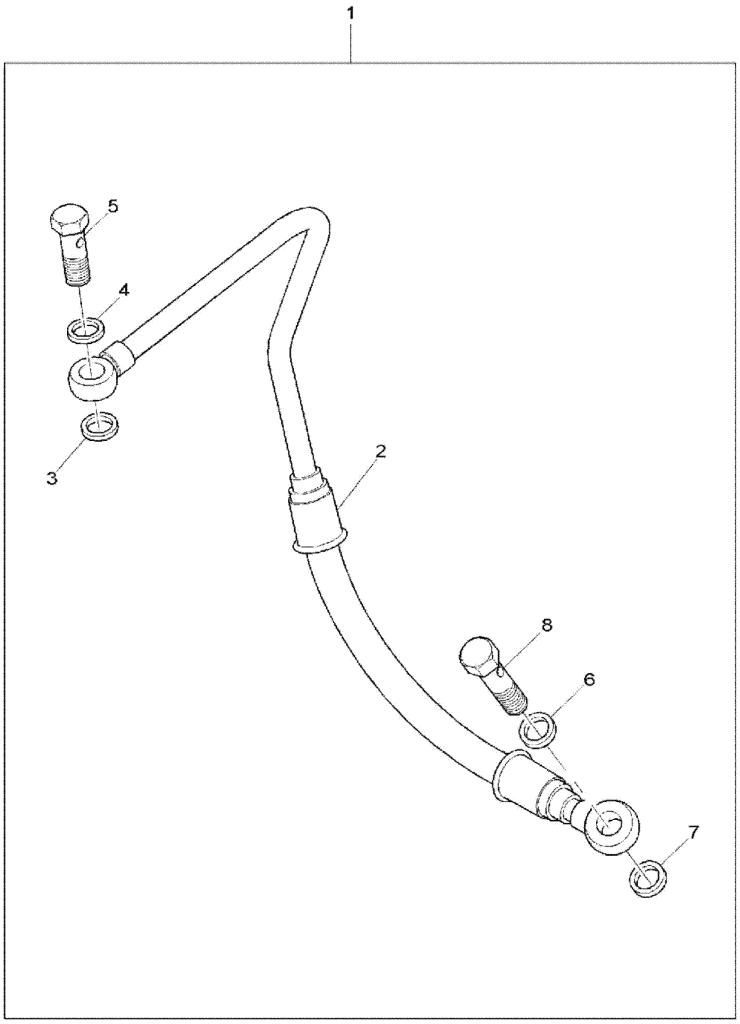

SIZINTI BORUSU
LEAK-OFF PIPES

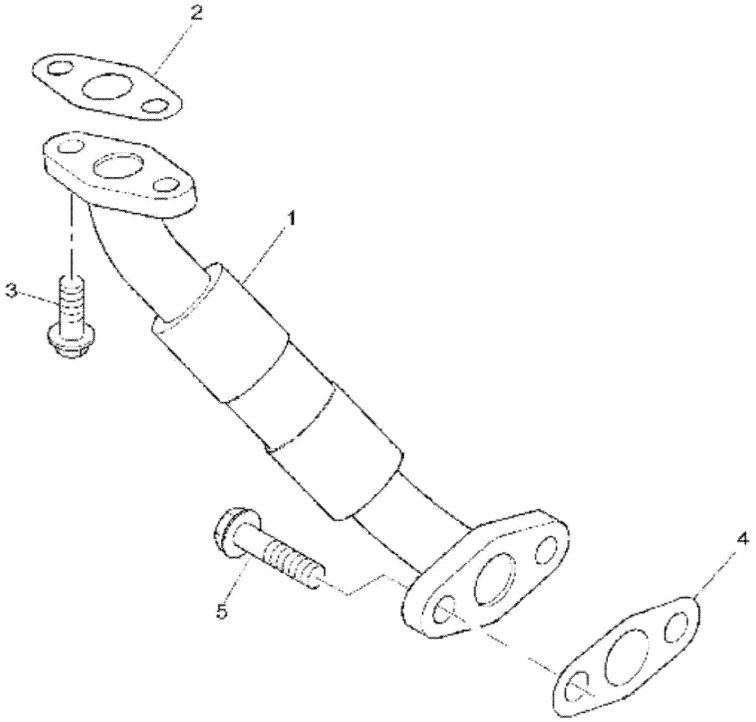

HAVALANDIRMA SİSTEMİ
BREATHER

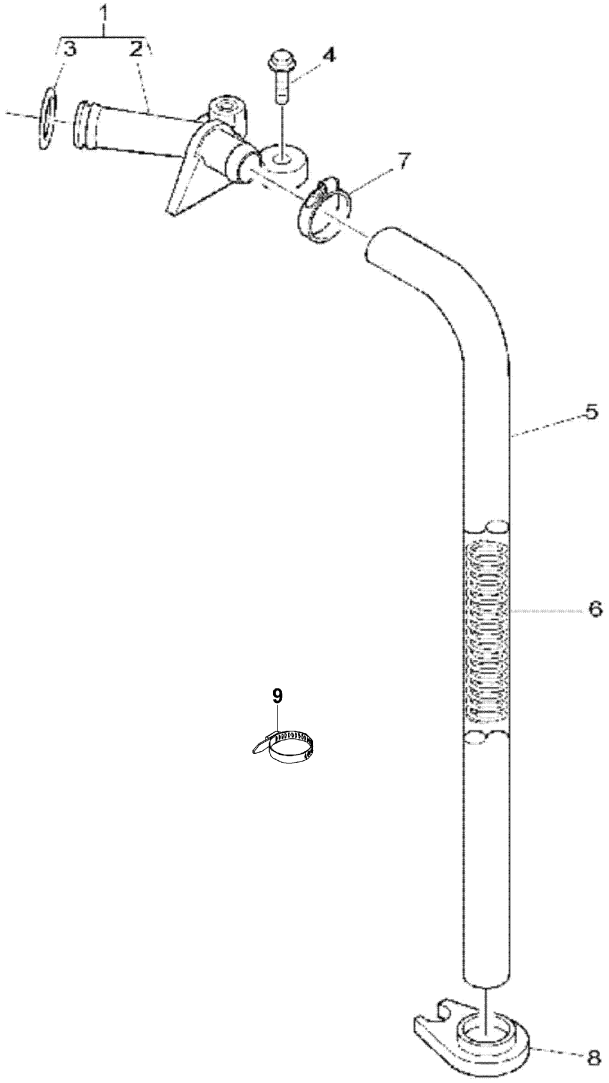

FAN KASNAĞI
FAN DRIVE

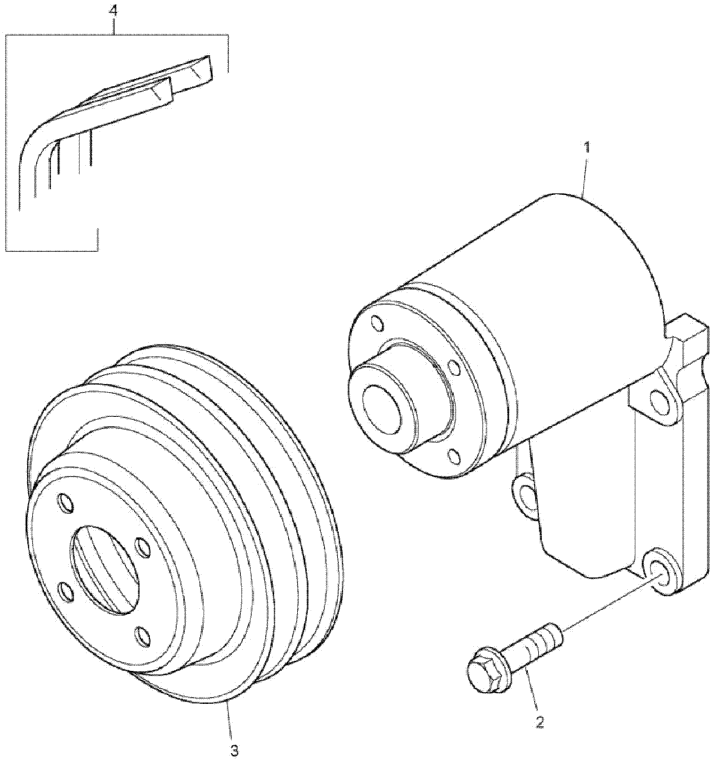

SU DEVİRDAİM POMPASI
WATER PUMP

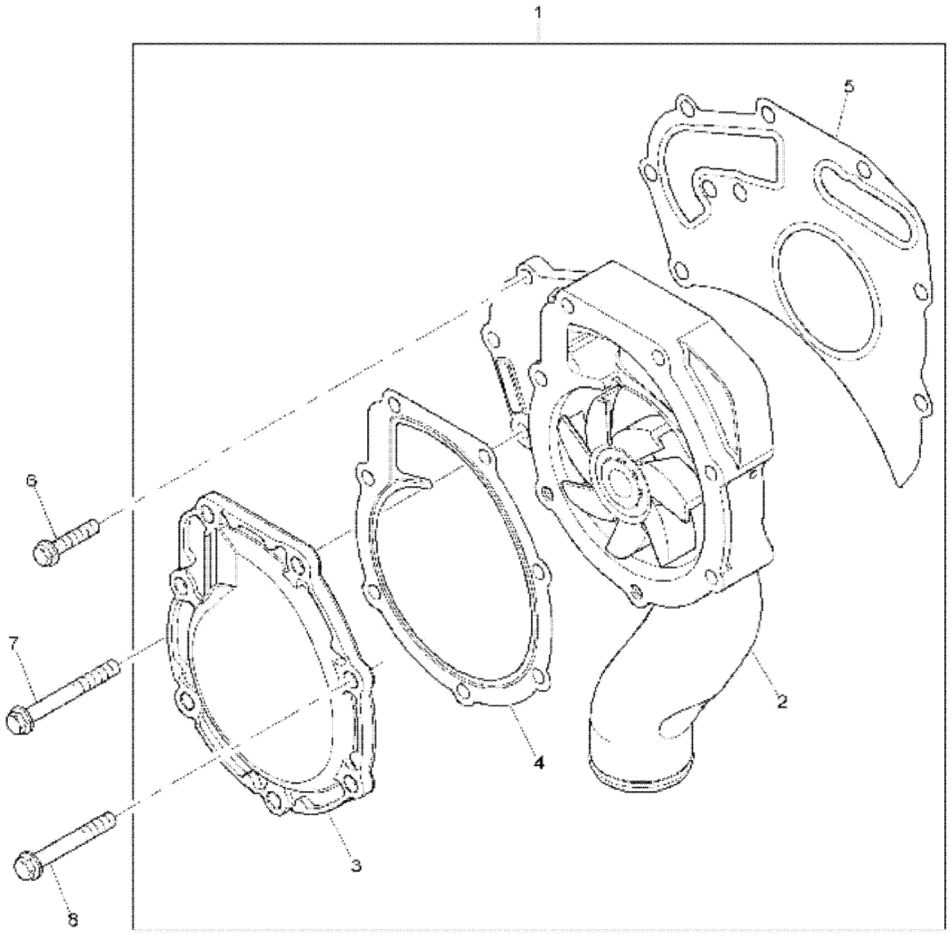

BAĞLANTI BORULARI
PIPES

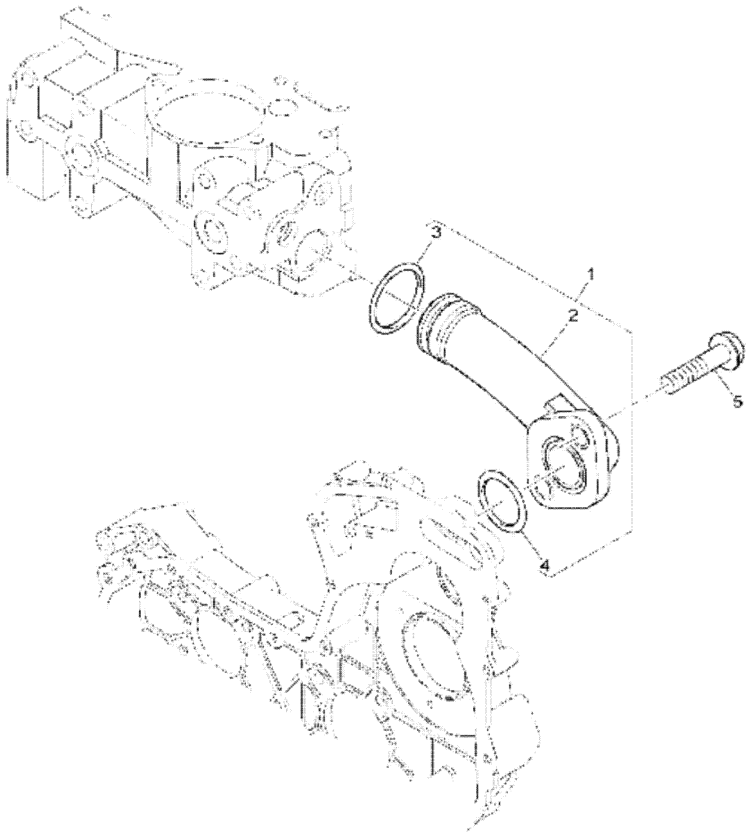

TERMOSTAT VE KAPAĞI
WATER OUTLET HOUSING

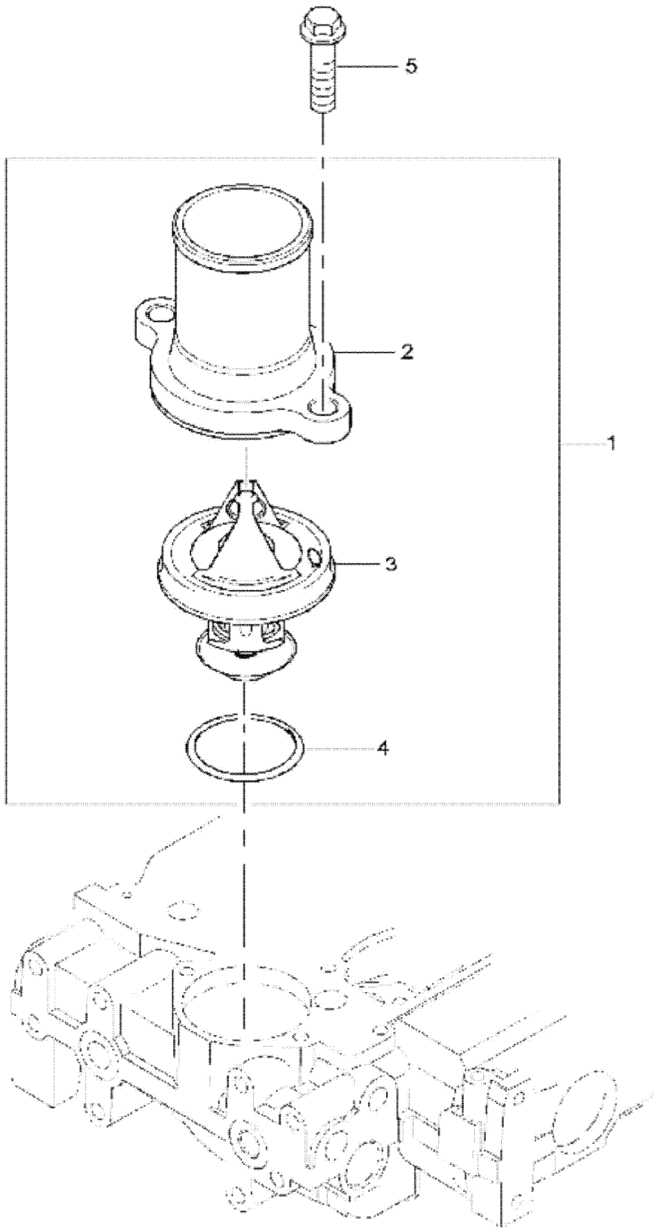

YAKIT PÜSKÜRTME POMPASI
FUEL INJECTION PUMP

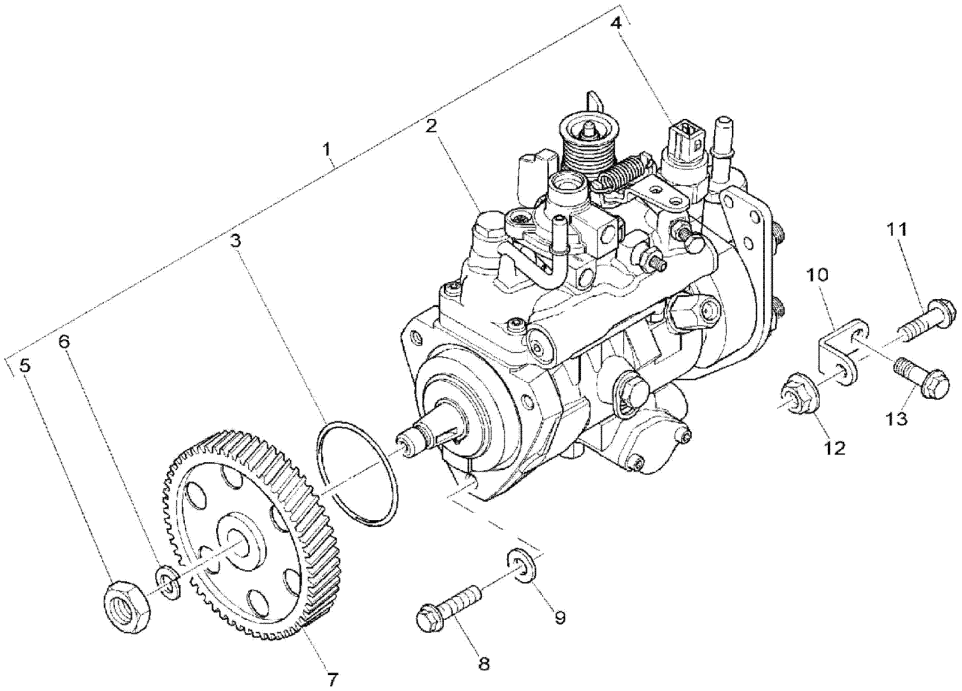

YAKIT BORULARI
HIGH PRESSURE FUEL PIPES

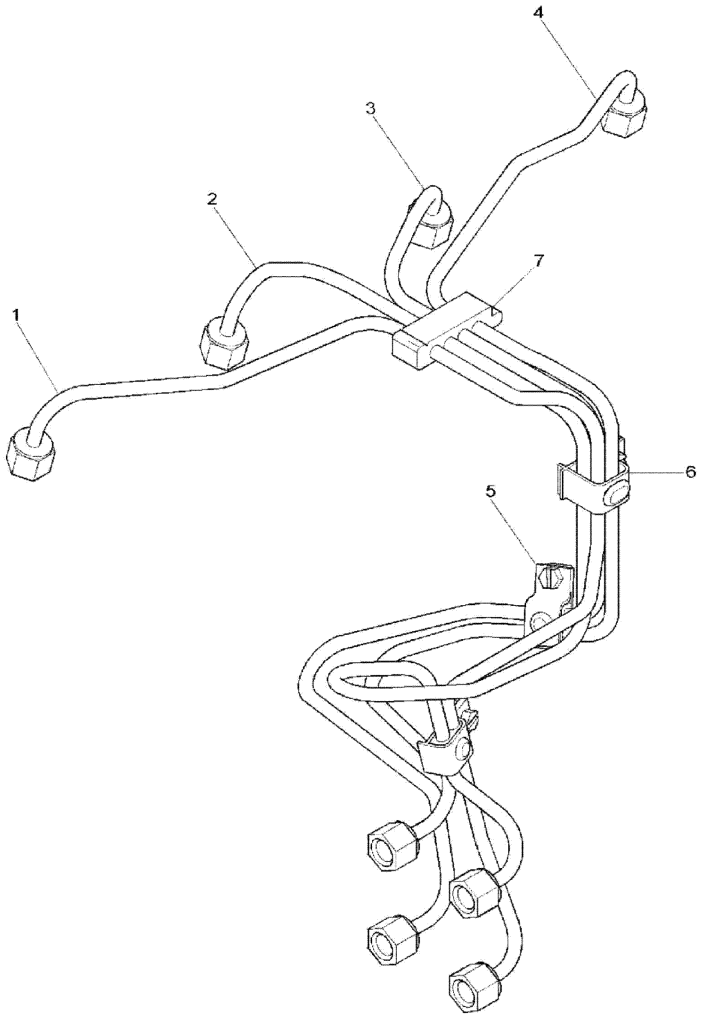

ENJEKTÖRLER
ATOMISERS

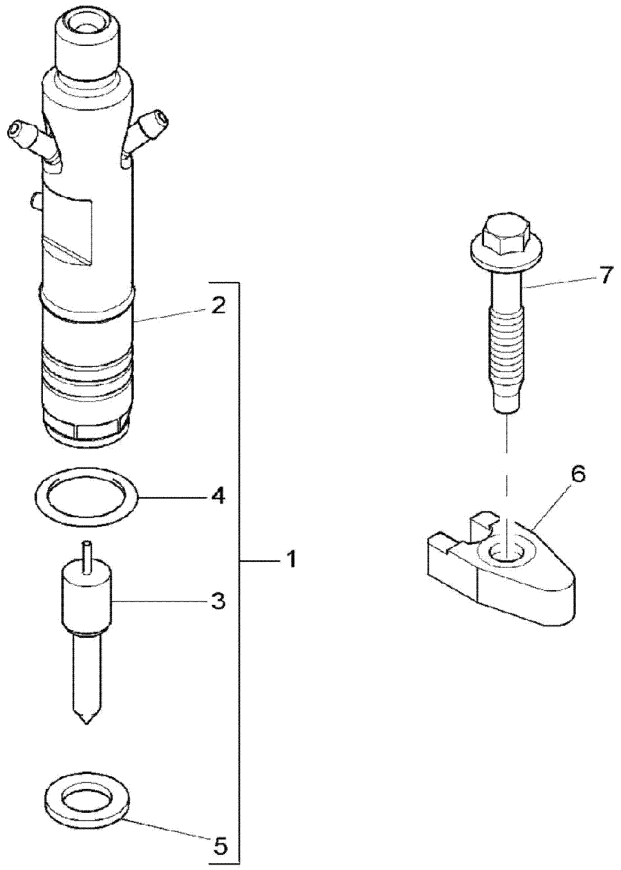

YAKIT SIZINTI BORUSU
FUEL LEAK-OFF PIPE

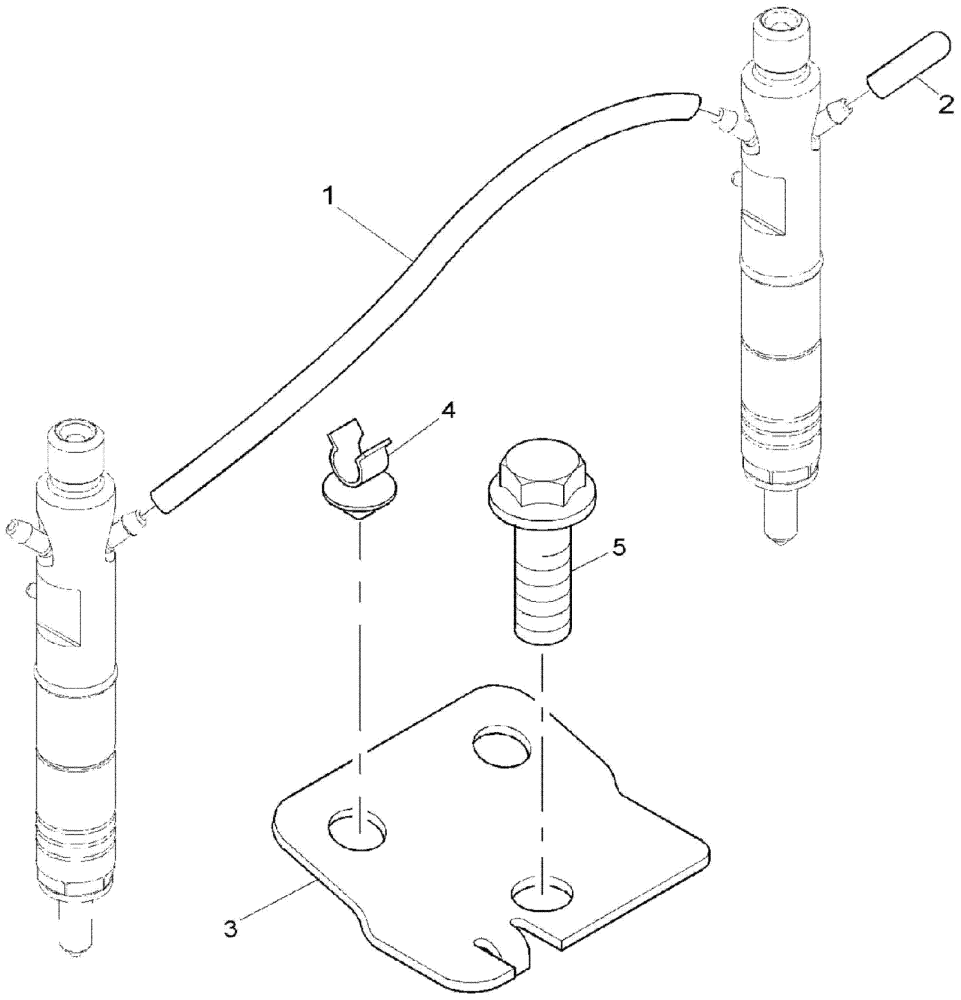

YAKIT TRANSFER POMPASI
LIFT PUMP

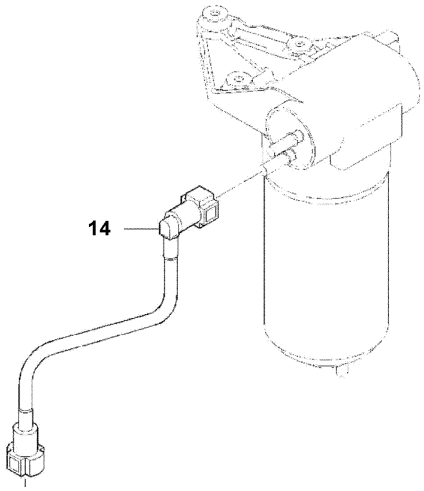

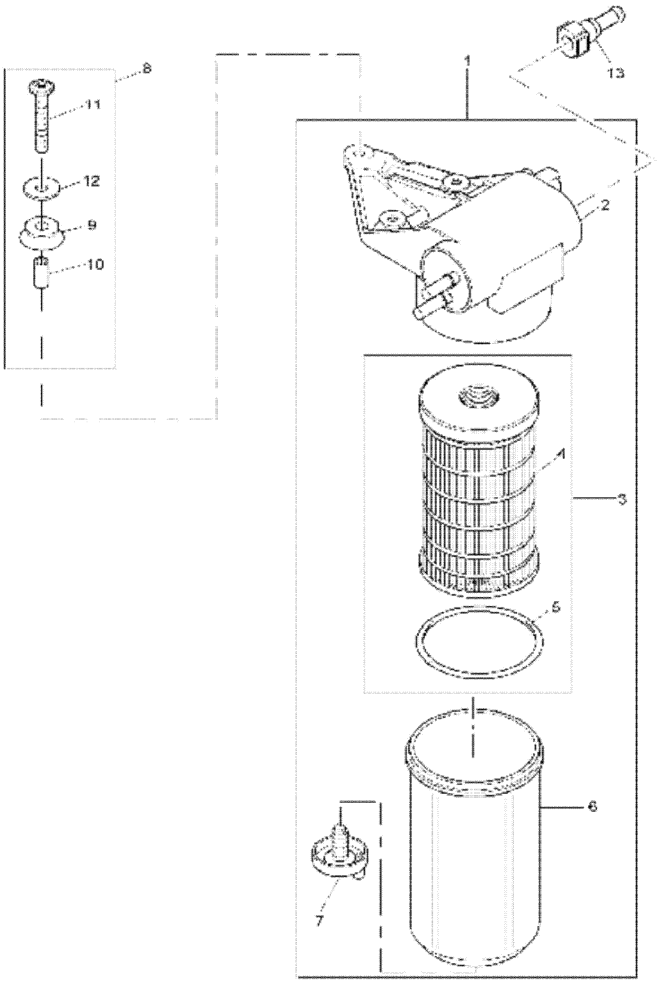

PÜSKÜRTME POMPASI BORUSU
INJECTION PUMP TO FILTER PIPE

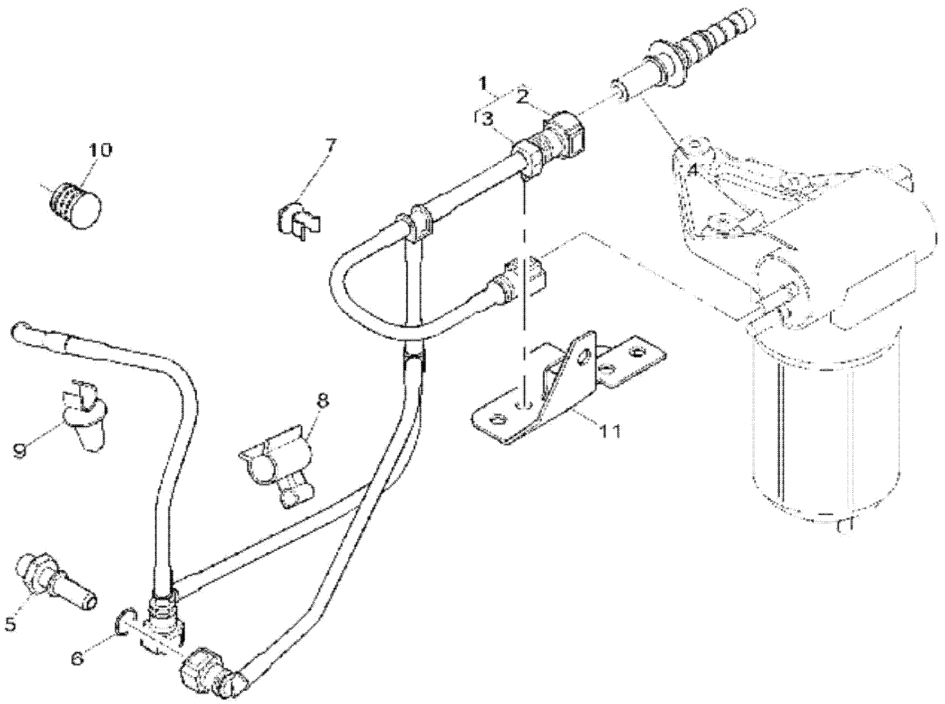

YAKIT BESLEME KONTROL BORUSU
BOOST CONTROL PIPE

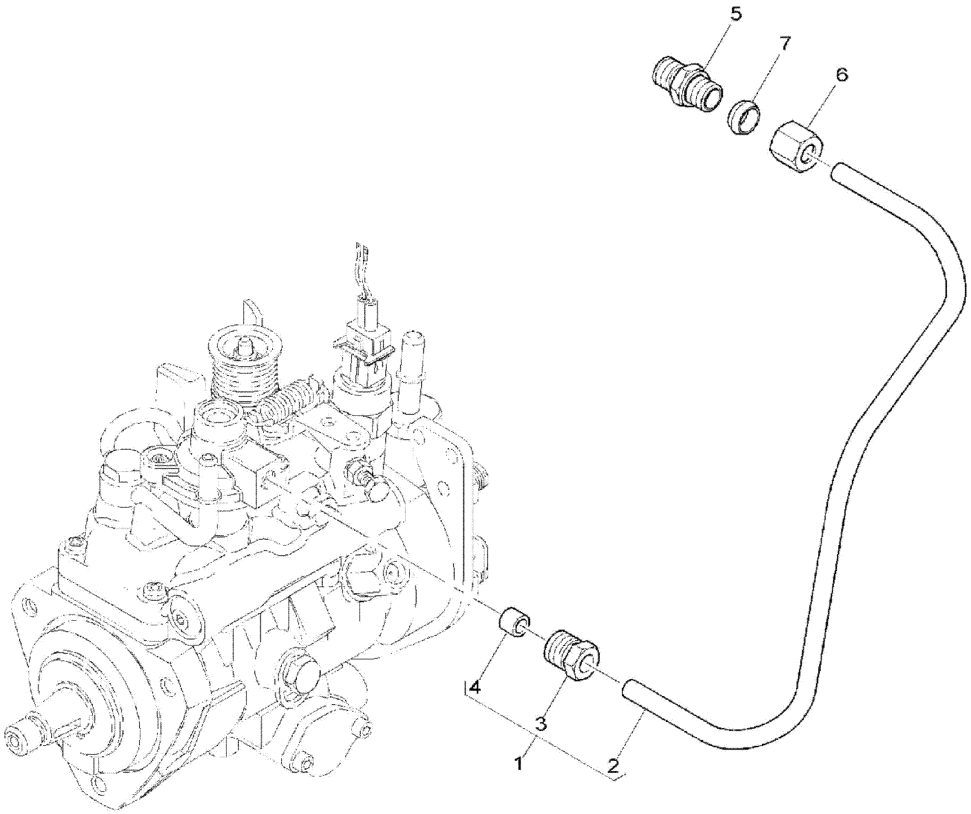

SOĞUK ÇALIŞTIRMA MÜŞÜRÜ
PICK-UP SENSOR

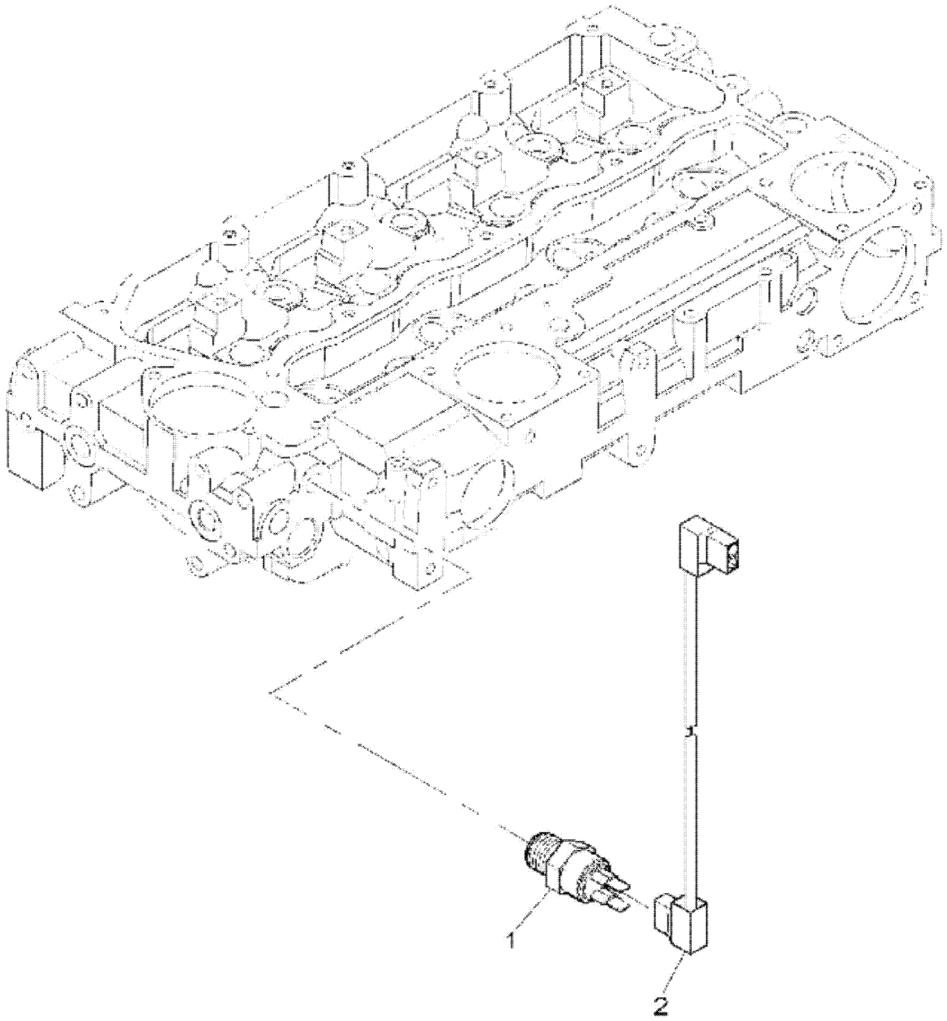

İLK HAREKET MÜŞÜRÜ
PICK-UP SENSOR

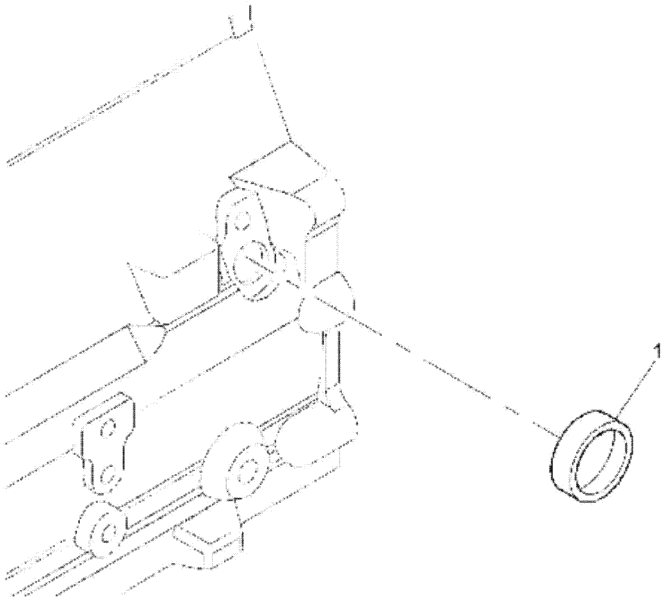

MARŞ MOTORU
STARTER MOTOR

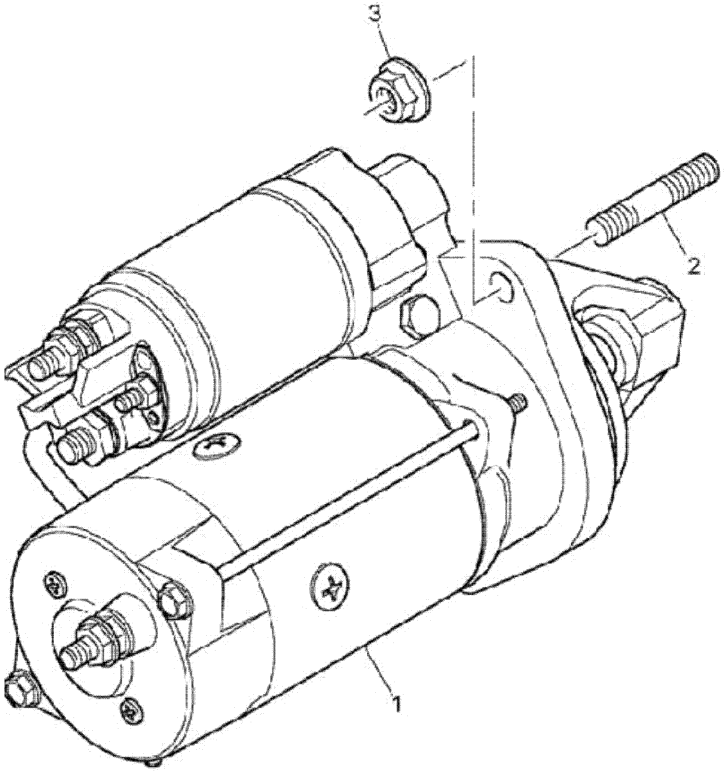

ALTERNATÖR
ALTERNATOR

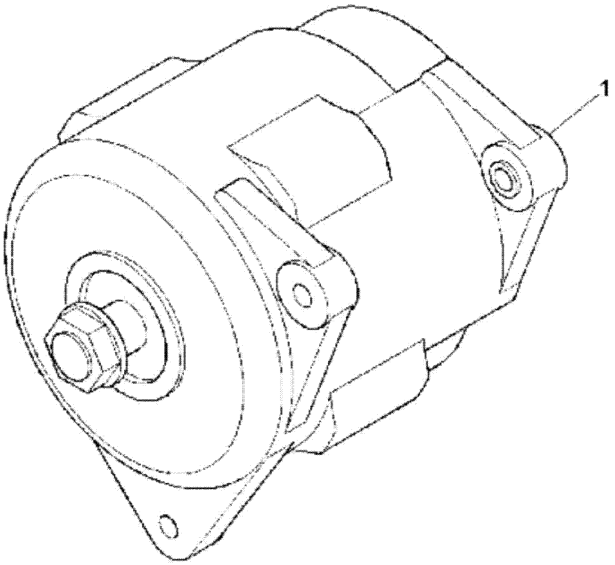

ALTERNATÖR BAĞLANTILARI
ALTERNATOR BRACKET & FIXINGS

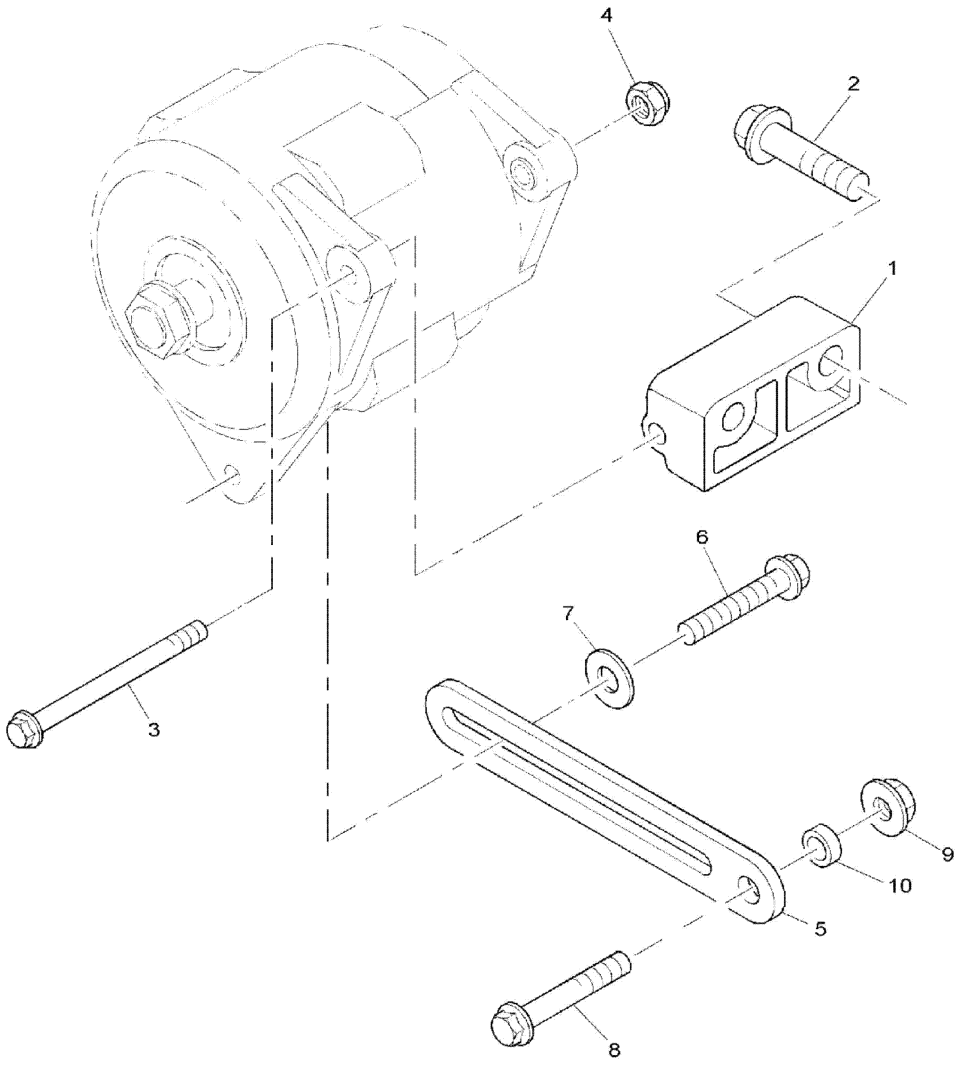

ALTERNATÖR KASNAĞI
PULLEYS

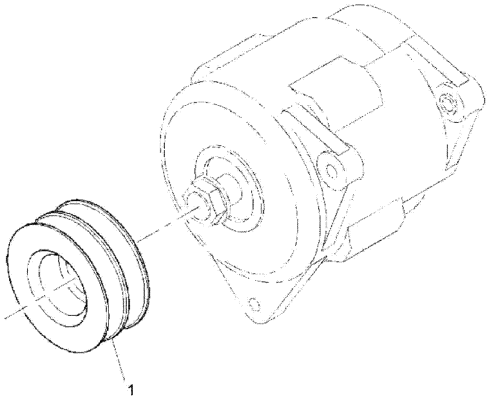

ISITMA BUJİSİ
HEATER PLUGS

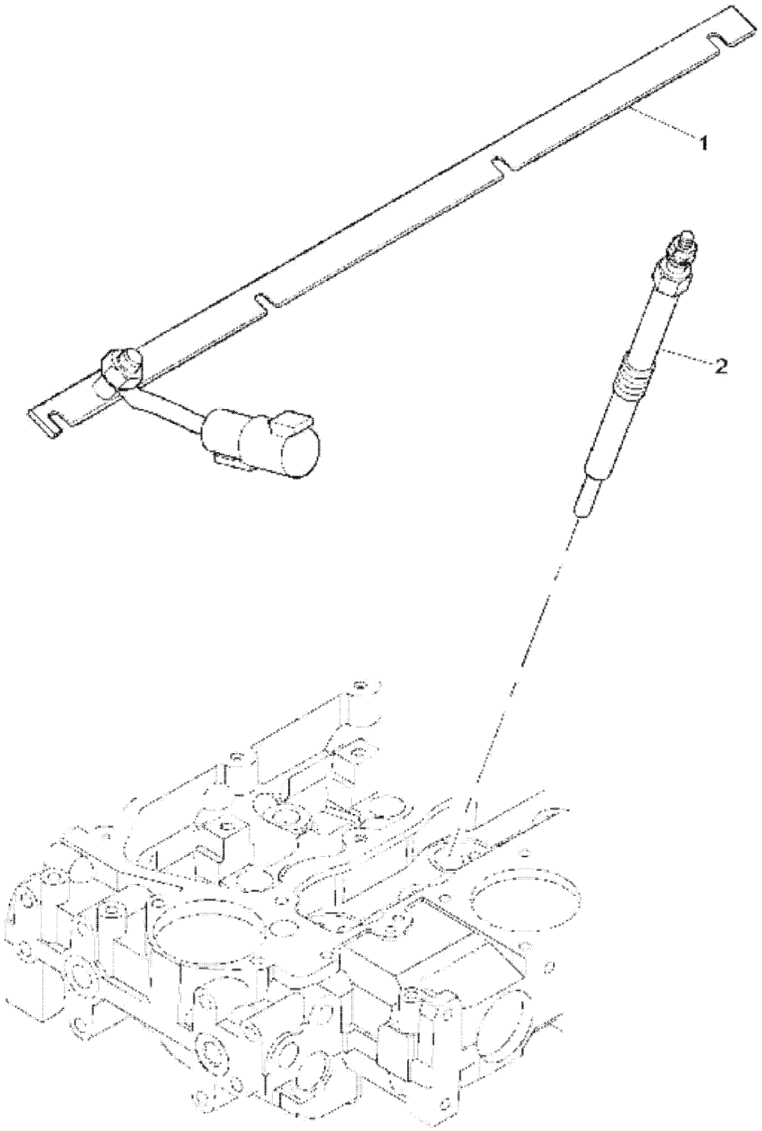

YAĞ BASINÇ MÜŞÜRÜ
LUBRICATION OIL PRESSURE SWITCHGAUGE

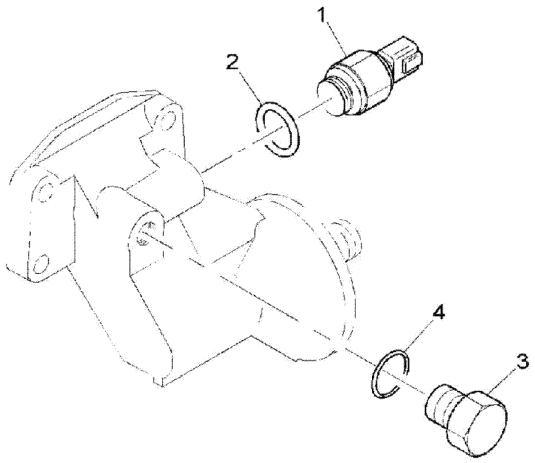

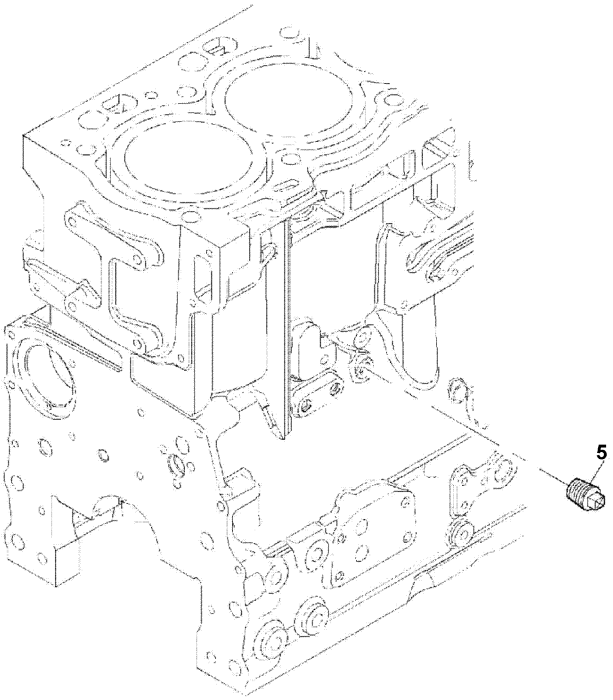

SU HARARET MÜŞÜRÜ
TEMPERATURE GAUGE & SENDER

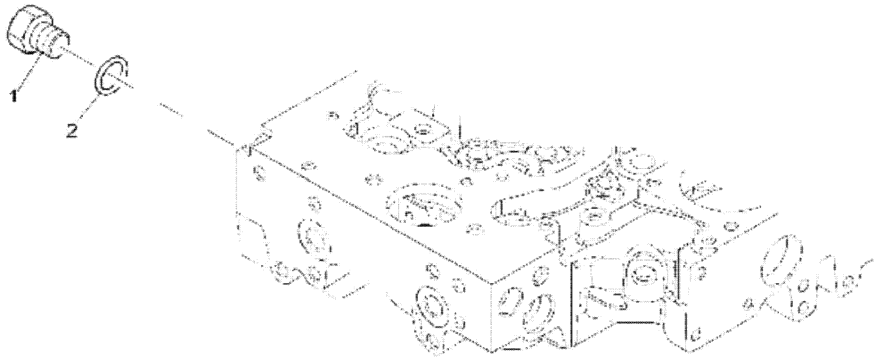

TÜRBOŞARJ
TURBOCHARGER

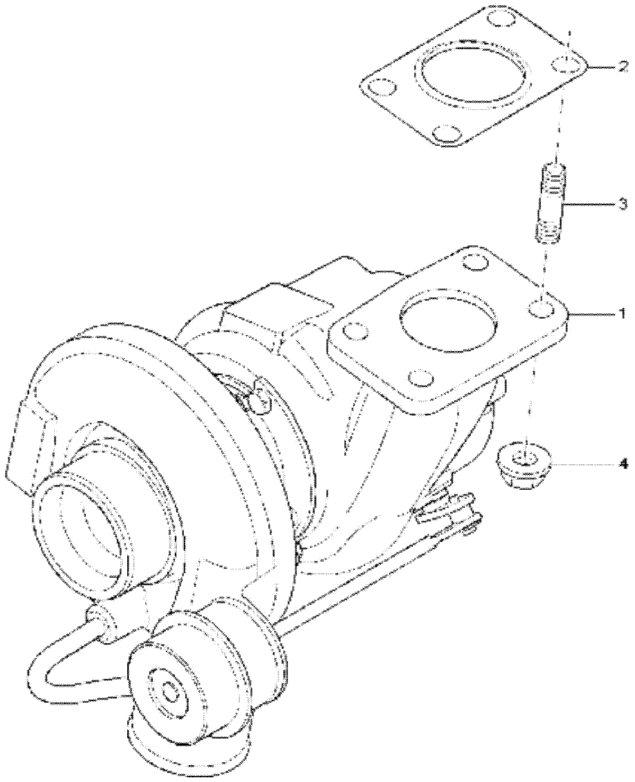

EGSOZ DİRSEĞİ VE BAĞLANTILARI
PIPEWORK & CONNECTIONS

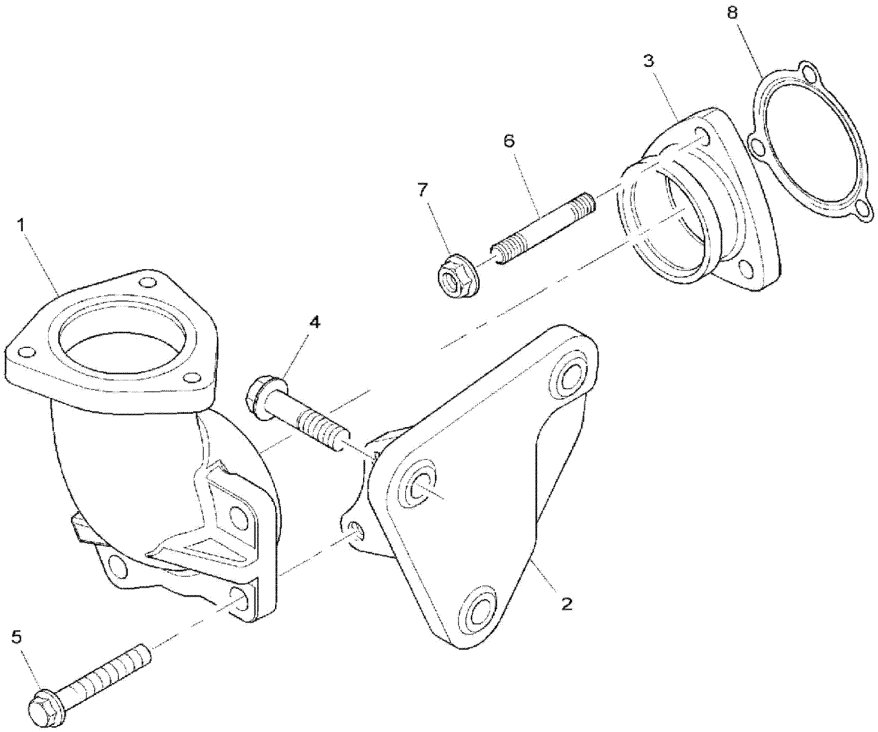

EGSOZ MANİFOLDU
EXHAUST MANIFOLD

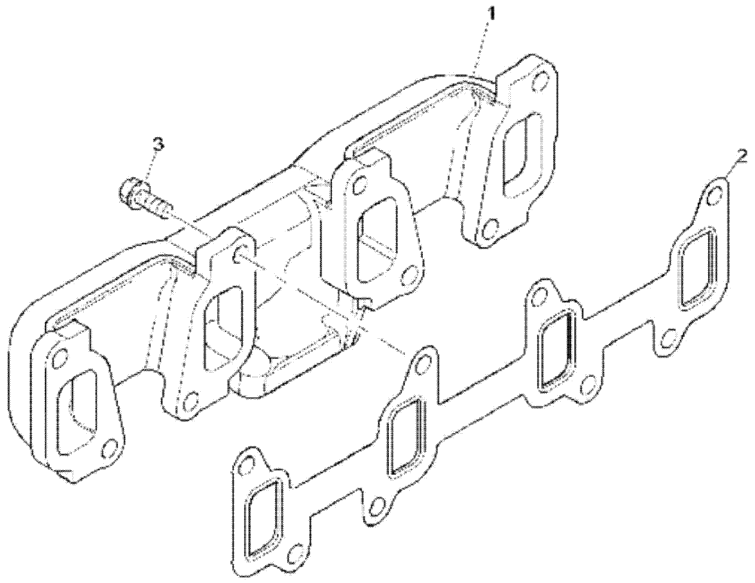

BAĞLANTILAR
PIPEWORK & CONNECTION

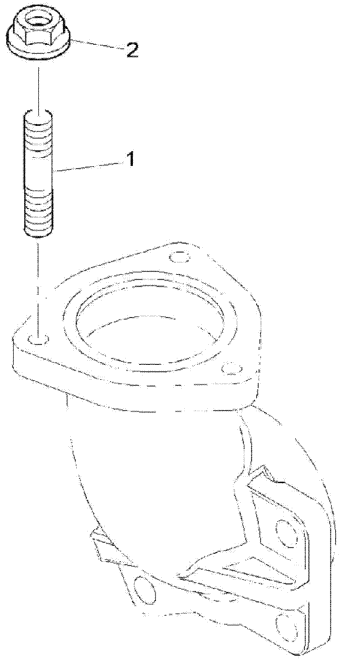
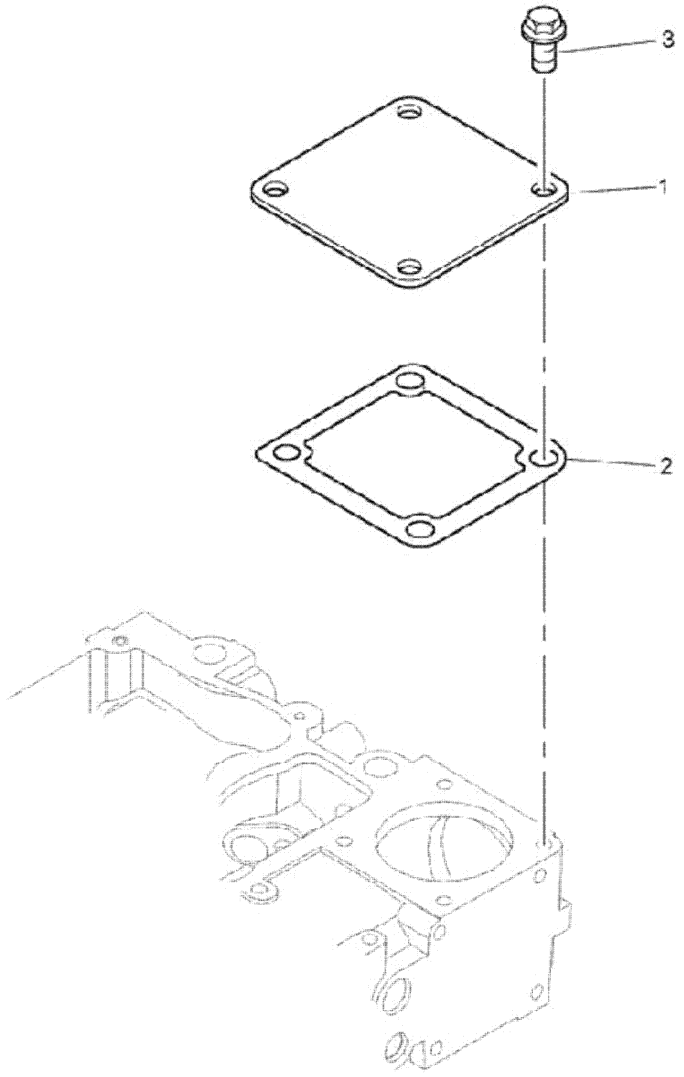
EMME MANİFOLDU
INDUCTION MANIFOLD